KENT USA®

CS-18-22-26 Lathe Operator's Manual

www.kentusa.com | 1.800.KENT.USA

Property of Kent USA
Please Do Not Reproduce

INDEX

1. GENERAL LATOUT..... 1

2. INSTALLATION..... 4

3. OPERATION AND USE..... 9

4 PART LIST..... 20

Property of Kent USA
Please Do Not Reproduce

GENERAL LAYOUT

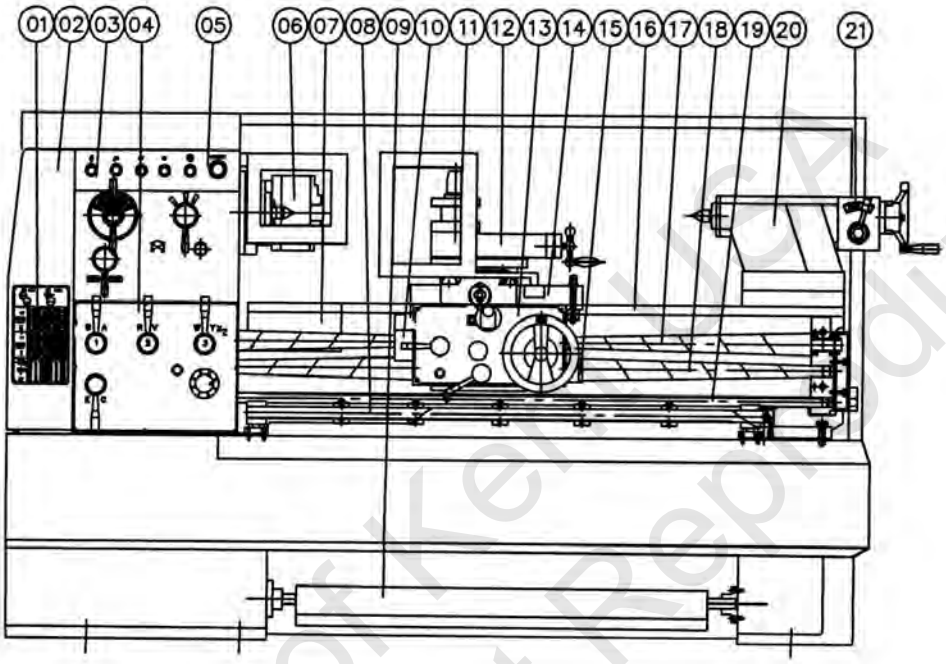

FIG.1

01 THREADS AND FEEDS CHART
02 COVER
03 HEADSTOCK
04 GEAR BOX
05 ELECTRICAL CONTROL
06 CHUCK
07 GAP
08 STOP ROD
09 FOOT BRAKE
10 THREAD CHANSING DIAL
11 SQUARE TURRET TOOL POST
12 TOP SLIDLE
13 APRON
14 SADDLE AND CROSS SLIDE
15 STARTING AND STOPPING LEVER
16 BED
17 LEAD SCREW
18 FEED ROD
19 THIRD-ROD
20 TAIL STOCK
21 GEAR BOX

Property of Kent USA
Please Do Not Reproduce

SPECIFICATIONS:

MODELS	CS-18	CS-22	CS-26
ITEMS	1000G,1600G,2200G		
SWING			
Height of center (over bed)	230mm	280mm	330mm
Over bed swing	460mm	560mm	660mm
Over cross slide swing	260mm	360mm	460mm
Over gap & width in front chuck	680mm	780mm	880mm
Distance between centers	1000mm,1600mm,2200mm		
HEADSTOOK			
Spindle bore	58mm	82mm	
Number of spindle speed	12		
Range of spindle speed	36~2000rpm	25~1500rpm	
Spindle nose	ASA-A_2-6(D_1-6)	ASA-A_2-8(D_1-8)	
FEEDS-THREAD			
Lead screw	35mm(1-3/8") 4T.P.I. or 6mm		
Number of feed changes	32		
Longitudinal feed range	0.04-1.0mm(0.0015"~0.004")		
Cross feed range	0.04-1.0mm(0.0015"~0.004")		
Inch threads	45kinds 2~72T.P.I.		
Metric threads	41kinds 0.2~14mm		
D.P.no / range	21kinds D.P.8~44mm		
Module pitches no. / range	18kinds M0.3~3.5mm		
TOOL SLIDE			
Cross slide travel	260mm(10")		
Compound rest travel	127mm(15")		
TAIL STOOK			
Spindle travel	150mm(6")		
Spindle diameter	§ 65mm(1-1/2")		
Taper of center	M.T.#4	M.T.#5	
MOTOR			
Main motor	7.5 HP/4P		
Coolant pump	1/8HP		
BED			
Length	1960mm,2560mm,3160mm		
Width	340mm		

Property of Kent USA
Please Do Not Reproduce

MODELS	CS-18			CS-22			CS-26		
Length×Width×Height	2200x1130 x1280	2800x1130 x1280	3400x1130 x1280	2200x1130 x1330	2800x1130 x1330	3400x1130 x1330	2200x850 x1380	2800x1130 x1380	3400x1130 x1380
N.W.	1850 kg	2100 kg	2400 kg	1900 kg	2200 kg	2550 kg	1950 kg	2250 kg	2600 kg
G.W.	2050 kg	2300 kg	2700 kg	2100 kg	2450 kg	2900 kg	2150 kg	2500 kg	2950 kg

STANDARD ACCESSORIES:

1 Drive back.....1pc

2 Center sleeve.....1pc

3 Center M.T. No. 4.....2pcs

4 Tool post wrench.....1pc

5 7.5HP 50or 60Hz motor..... 1pc

6 1/8HP Coolant pump.....1pc

SPECIAL ACCESSORIES:

1. 3-Jaw scroll chuck.....9" 1pc
2. 4-Jaw independent chuck...10 " 1pc
3. Steady rest.....1pc
4. Follow rest.....1pc

Property of Kent USA
Please Do Not Reproduce

INSTALLATION

HANDLING

CAUTION : When handling, observe symbols painted on crate for "safe lifting" either by sling or fork lift ! When crate has been removed, the machine can be handled either on or off the skid.

UNPACKING

Carefully unpack and remove all items from crate. Examine for freight damage & check against packing slip to verify receipt of complete shipment. Freight damage claims must be filed immediately with the carrier - NOT WITH THE FACTORY Shortage should be reported to the distributor immediately.

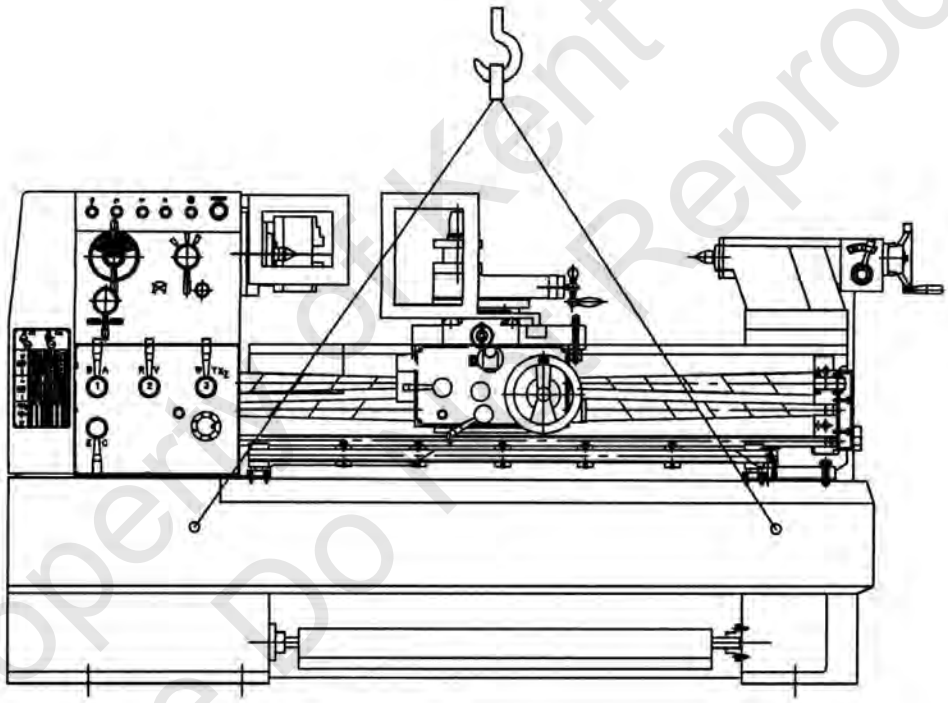

FIG.2

LIFTING

(1) Use 2 steel bars 1-1/2"(38m/m) diameter, 32" (800m/m) (minimum) long. (Should extend at least 4" (100m/m) each side of lathe.) Place bars & sling as shown FIG 2.

(2) Use at least 1/2" (12m/m) diameter steel cable (or equivalent fabric) sling for lifting. Place wooden blocks or cloth between the sling and the machine to prevent damage. SEE FIG 2.

(3) Before lifting position the tailstock and carriage towards the tailstock end of the bed to help distribute and balance the machine weight.

Property of Kent USA
Please Do Not Reproduce

POSITIONING AND LEVELLING

The production accuracy of all precision machinery depends on the accuracy with which the machine is aistalled. Manufacturing tolerance of the machine can only be guaranteed if the machine is firmly and accurately installed. The foundation for all C.H lathes should be of the highest quality concrete and at least 22-1/2" in depths. The foundation should support the entire weight bearing surfaces of the lathe base.

Once the machine is lowered on the prepared foundation, machinists levels should be used alternarely on the cross slide and slideways of the lathe. Reading of the level should be taken on the extreme ends of the slideways as well as in the center. Minute adjustments of adjusting blots should be made until the machine is perfectly leveled.

When the level of the lathe has been established, immediately grout the machine base to the foundation with the highest quality, shock-vibration-resistant mortar.

Care must be tacken not to jar the machine or the foundation after grouting until the mortar is completely set; usually 48 hours are required. The anchoring bolts should be securely tightened after the grouting mortar is set; and spirit levels should again be used to assure absolute levelling of the lathe.

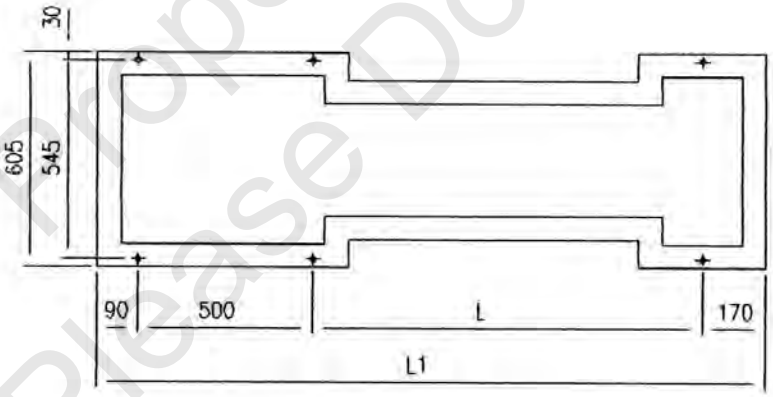

Detailed view foundation

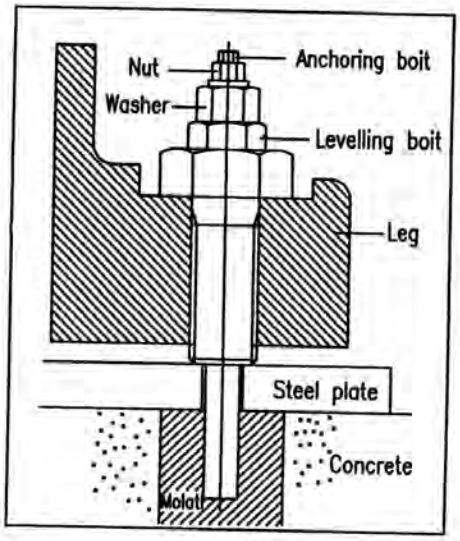

ITEMS\MODELS	1000G	1600G	2200G
L	1440	2040	2640
L1	2200	2800	3400

Property of Kent USA
Please Do Not Reproduce

LEVEL ADJUSTMENT

Once the machine is located on the bolts, a machinists level should be used alternately on the cross slide and slideways of the lathe as illustrated (fig.4&4A.) Minute adjustments of adjusting bolts should be made until the machine is accurately levelled.

Positioning of Spirit Levels

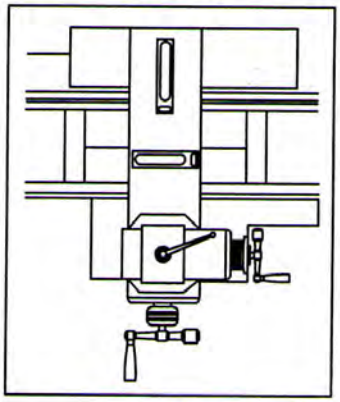

FIG.4

When using precision level all readings to be within 0.0003" (0.008mm) in 12" (305mm)

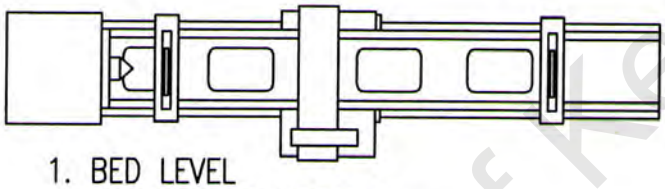

1. BED LEVEL
TRANSVERSE DIRECTION

When using precision level along bed maximum reading to be within 0.0008" (0.020mm) in 12" (305mm)

2. BED LEVEL
LONGITUDINAL DIRECTION

FIG.4A

ELECTRICAL WIRING

This machine is equipped with 7.5HP or 10HP main motor and 150W coolant pump. If an electric wire is used a cap-tired code, use size over AWG # 8. The use of extremely fine wires causes the fall of the voltage which often brings the trouble on a magnetic contactor.

In case the voltage is dropped down less than 70% of the required voltages, the magnetic contactor dose not work properly, so that the main motor may stop running, lowering the life of magnetic contactor.

Protect carefully the electric wires exposed to the outside, which will be liable to be damaged by chips. This will induce a layer-short accident and will lower an efficiency to a considerable extent. The respective wirings should be connected with terminals R.S.T. at the control boss. In this instance check the revolving direction of main motor.

Property of Kent USA
Please Do Not Reproduce

LUBRICATION

CAUTION： Before operation, lubricate machine as indicated! For long life and precise operation of the lathe, all moving parts should be kept properly lubricated. To keep the machine properly lubricated, follow the instructions given on the following chart: Fig 5.

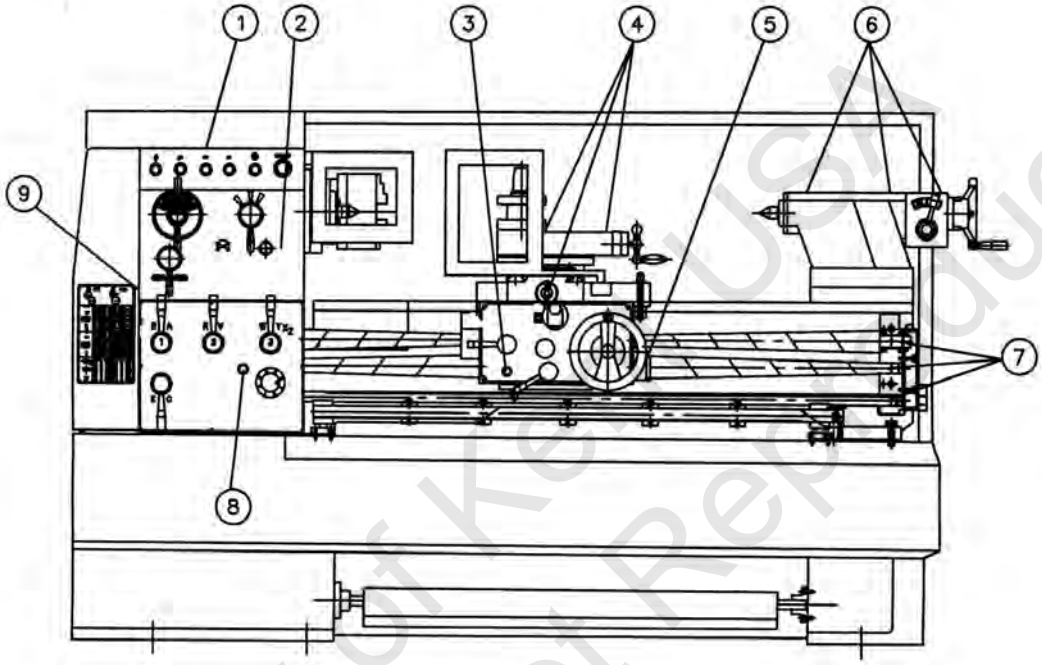

FIG.5

(1) Headstock cover.
(2) Headstock oil sight glass.
(3) Apron oil sight glass.
(4) Oil inlets for cross and longitudinal slides screw support bearings.
(5) One shot lube oil pump.
(6) Oil inlets, tailstock.
(7) Oil inlets, leadscrew and feed rod.
(8) Oil sight glass, feed gear box.
(9) Quick change gear box imlet.

Property of Ke USA
Please Do Not Reproduce

LOCATION	METHOD	FREQUENCY	QUANTITY	OIL RECOMMENDED	REMARKS
Headstock	Fill, Remove head cover fill to "sight glass Full Mark" Drain: Remove plug (Lowercenter outboard end headstock)	lst Change: After approx. 200 hours Thereafter: Every 6 months	11.36 liters (3 Gal.)	Shell Tellus #68	
Feed Gear (Quick Change) Box	Add/Fill, Remove top coverfill to sight glass "Full Mark" Drain: Remove drain plug directly beneath large numbered feed slector dial-front of box	Add, As needed to sight glass "Full Mark" Drain/Change: Six (6) month intervals	Approx. 5 liters (1-1/3 Gal.)	Shell Tellus #68	Resevoir Oil bath (Dip)
Apron	Add/Fill, Remove knurled "Oil plug"- right side apron, add to sight glass "Full Mark" Drain: Remove plug bottom left side of "bottom plate" (cover)	Add, As needed to sight glass "Full Mark" Drain / Change : Six (6) month intervals	Approx. 5 liters (1-1/3 Gal.)	Shell Tellus #68	Resevoir Oil bath dip plus automatic pressure system when feed is engaged
Ways, (Bed) Shddle & Cross Slide	"One shot" Pump, left side of apron manual system	3 times a day (normal operation)	1-3 shots normal	Provided from apron resevoir #68	3 position Distributor vaive on front right side saddle wing
Compound & Cross Slide Screws	Oil fittingstop surface both cross & compound slides Pump type oil can provided	Daily/as needed	2-3 Drops (one squirt of pump oil can)	Shell Tellus #68	
Tailstock	7 Fittings - Lube with pump type oil can provided	Daily/as needed when in use	2-3 Drops (one squirt of pump oil can)	Shell Tellus #68	
Outboard End Gears & Shafts	Apply grease to gear teeth. *Shaft (oil fitting in end)	Inspect weekly and grease as required *Oil daily	- Light Coating - Gears must not be run dry *2-3 drops	Use good clinging type gear grease *Shell Tellus #68	*Important! This shaft must be oiled
Lead Screw (a) & Feed Rod (b)	Lubricate surface with brush or cloth Oil fitting in end support block	Daily/as needed	Lead screw must be cleaned & threads lightly oiled	Shell Tellus #68	

Property of Kent USA
Please Do Not Reproduce

OPERATION AND USE

STARTING AND STOPPING

Before starting up machine, make sure if the proper lubrication to all running parts has been done as per lubrication chart on page. And switch ① on after ensuring the starting lever at aporn, which should be placed in the neutral position.

Upon switching on, the pilot lamp ② is on. The starting-up of main spindle is accomplished by the starting lever which incorporates a safety device, which prevents an abrupt accidend from operators. Move this starting lever horizontally to diaengage a safety pin. When this lever is moved. Thermal overload relay protects motor from overheating or excessive voltage coming in with the stop of motor drive. In the case of motor stop with reason, please reset the thermal relay by the pushing the button to reste. The main spindle gets a reverse revolution, and when the lever is moved downwards, the main spindle gets a forward revolution.

When this lever comes back to the neutral position, it engages a safety pin, and the main spindle stops revolving.

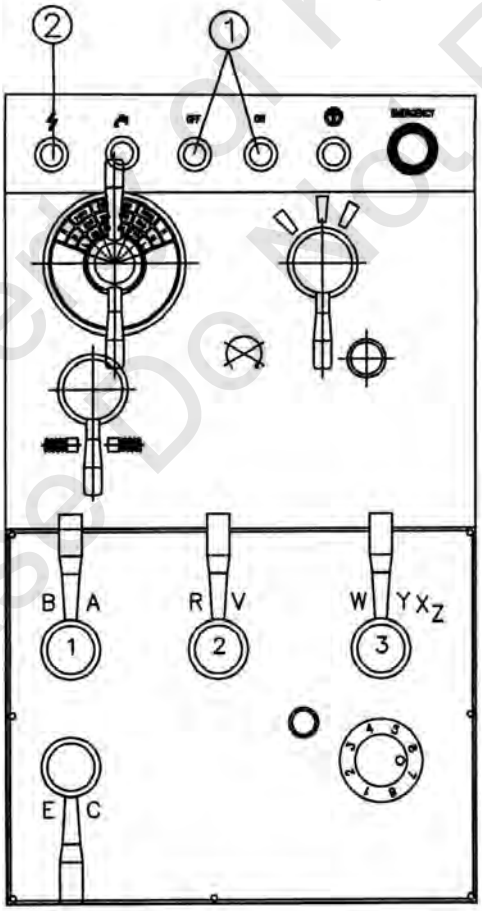

FIG.6

Property of Kent USA
Please Do Not Reproduce

SAFETY INSTRUCTIONS

Do not operate the machine unless protective cover and safety devices are in place and functioning.

PROTECTIVE CASING

1. Completely prevent scraps, flying dust, & impurities from entering.
2. Keep an accurate reciprocating rotary so as to increase the durability.
3. Beautiful, and avoid articles being rolled in.

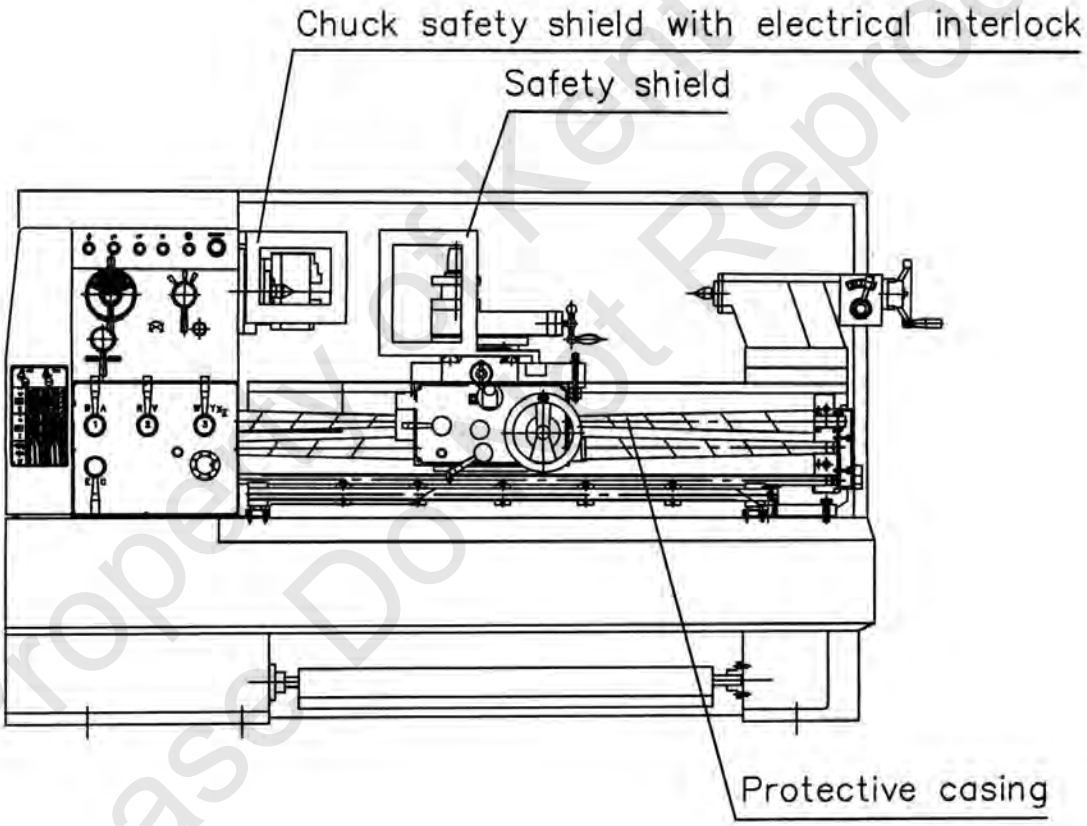

Property of Kent USA
Please Do Not Reproduce

SELECTION OF SPINDLE SPEEDS

Main spindle is supported by bearing in three places. Taper roller bearing is placed both at front and middle respectively to avoid the rise of temperature, and ball bearing is placed at the rear end to eliminate the expansion of main spindle. In addition to this, taper roller bearing at the middle is pressed by a saucer spring, due to which the adjustment of bearings is not needed at the position of lower speed range and higher speed range.

Note: Torque constant range is up to 52 r.p.m.

Operation

Range of spindle speeds: 80-2000, r.p.m.(12 spindle speeds)

The selection of spindle speeds carried out by three levers (A),(B)

Lever (A) selects name plates(A)or (B)and lever(B)selects(H) (M)or(L).

Knob(C) carries out the change of the forward and reverse revolution for feeds and threads. Check out the oil sight gage to make sure of the proper lubrication.

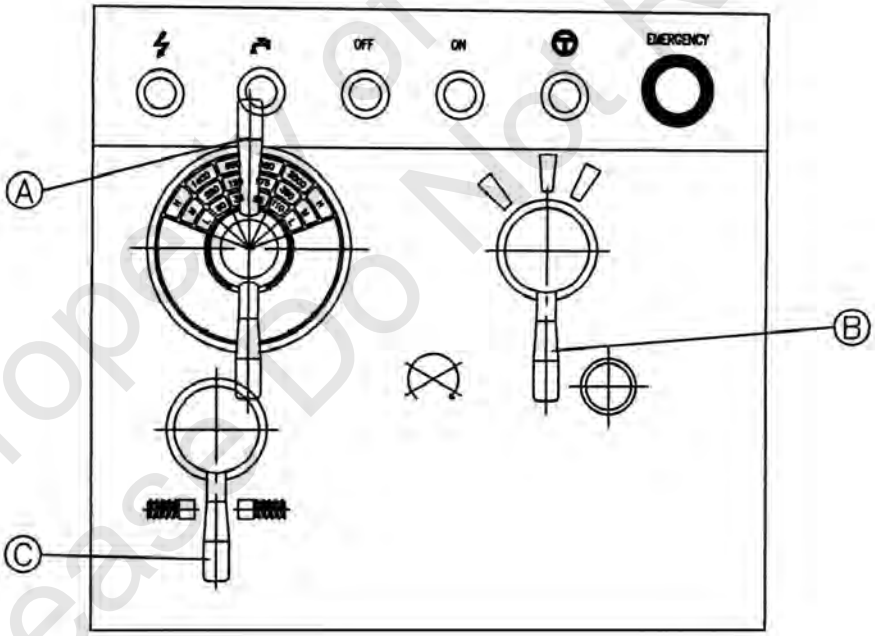

FIG.7

Property of Kent USA
Please Do Not Reproduce

QUICK CHANGE GEAR BOX

FUNCTION :

The quick change gears provide a means of changing rate of feed and/of pitch (lead) of thread to be cut.

It has been designed to handle both inch (imperial) and metric (mm.) threads and feeds simply, through shifting levers.

OPERATION

The drive of the feeds is transmitted by the forward & reverse transitional device in the main gear box, then, to the apron via feeds rod. By an 8-step-change-over-gear, which is specially deviced by our company, you can cut T.P.M. & T.P.I. thueads without hanging any end gears. (Change all lever of gear box under the 320 r.p.m. speeds or rotate the main spindle by hand)

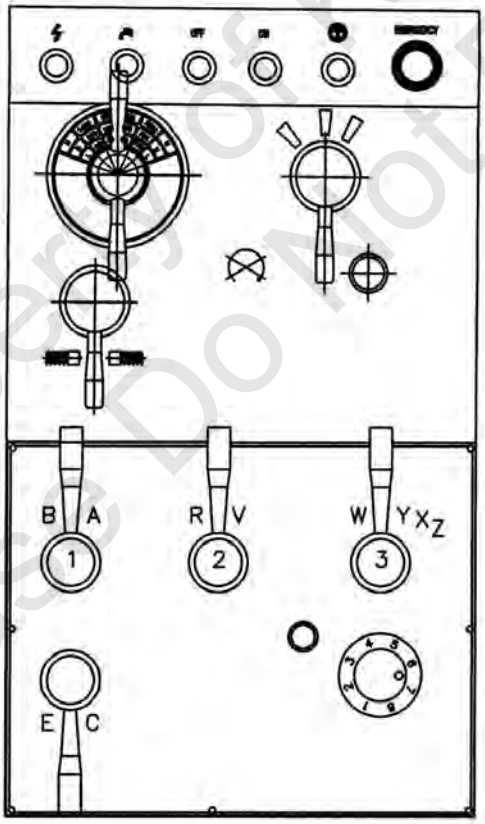

FIG.8

Property of Kent USA
Please Do Not Reproduce

FEEDS AND THREADS TABLE

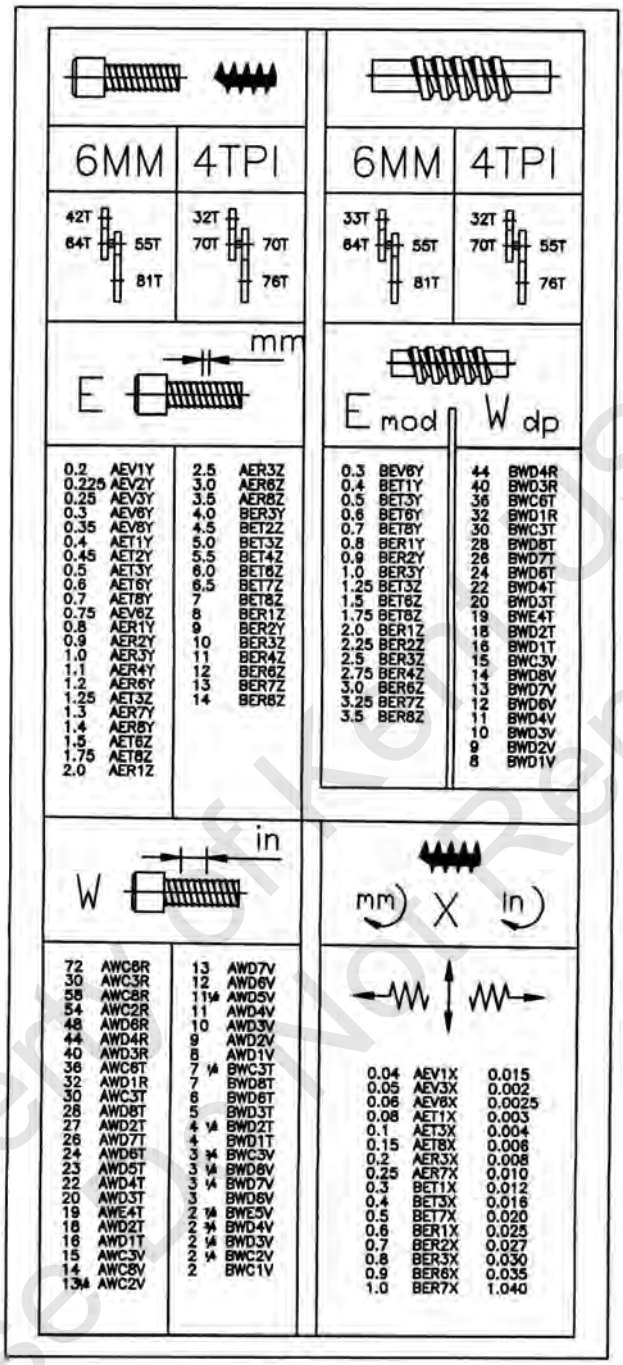

FIG.9

CAUTION :

Always Double Check to be sure proper end gear set-up is in pleace to cut the thread you have selected - (SEE CHART ON MACHINE)

NOTE :

To cut metric thread on an inch lathe or the inch thread on a metric lathe, the half nut must not be disengaged one if has been seat.

To make repeat passes it is necessary to reverse the spindle at the end of each cut (with all gearing & half nut still fully engaged).

Property of Keen USA
Please Do Not Reproduce

THREAD DIAL INDICATOR

The thread dial indicator located on the side of the apron is used to indicate when the half nut may be engaged for a particular thread lead, while cutting threads on an inch leadscrew lathe, select the gear of 16 teeth on a metric leadscrew lathe select the gear of 14 and 15 teeth.

please refer to the chart belew :

Inch leadscrew lathe (worm gear 16 teeth. Leadscrew 4 T.P.I.)

Lead screw by inch	Clutch point
4, 8, 12, 16, 20, 24, 28, 36	Any point
6, 10, 14, 18, 22, 26, 30, 42	8 div. point
5, 7, 9, 11, 13, 15, 21, 23, 27, 33, 39	4 div. point
4, 5, 6, 7, 9, 10, 11, 13	2 div. point
8	one point

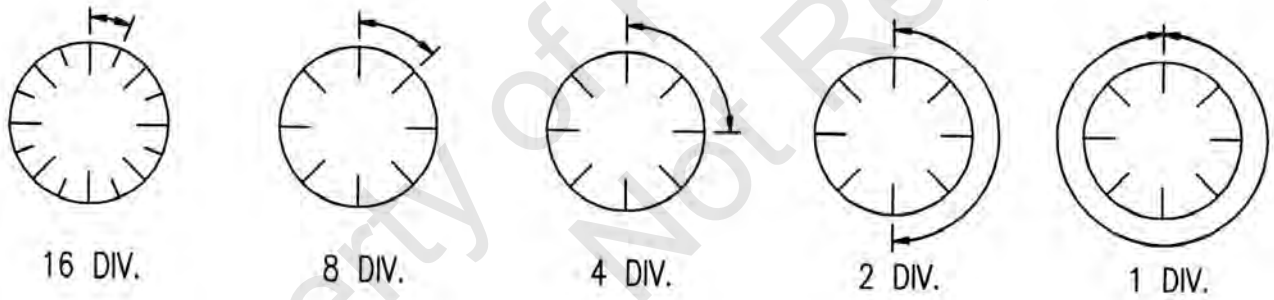

FIG.10

Metric leadscrew lathe (L-6mm)

Worm gear	Clutch point	Pitch range
14T	7 div. point	4, 0.8, 2.4
	2 div. point	0.7, 1.75, 3.5, 7, 1.4, 2.8
15T	15 div. point	0.4, 0.5, 0.6, 0.75, 1.0, 1.2, 1.5, 2, 3, 6
	5 div. point	0.9, 1.8, 2.25, 4.5
	3 div. point	1.25, 2.5, 5

14 division and 15 division is on the same pices which are within the face and back.

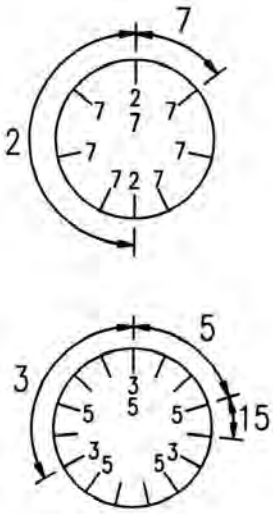

FIG.11

Property of Kent USA
Please Do Not Reproduce

CARRIAGE AND APRON

The engaging and disengaging of longitudinal and cross feeds is accomplished by lever (10) drop worm; system). The interlocking device is equipped so that the longitudinal feeds and the half-nut engagement or disengagement can not work together. There is an overload safety device by means of cone clutch.

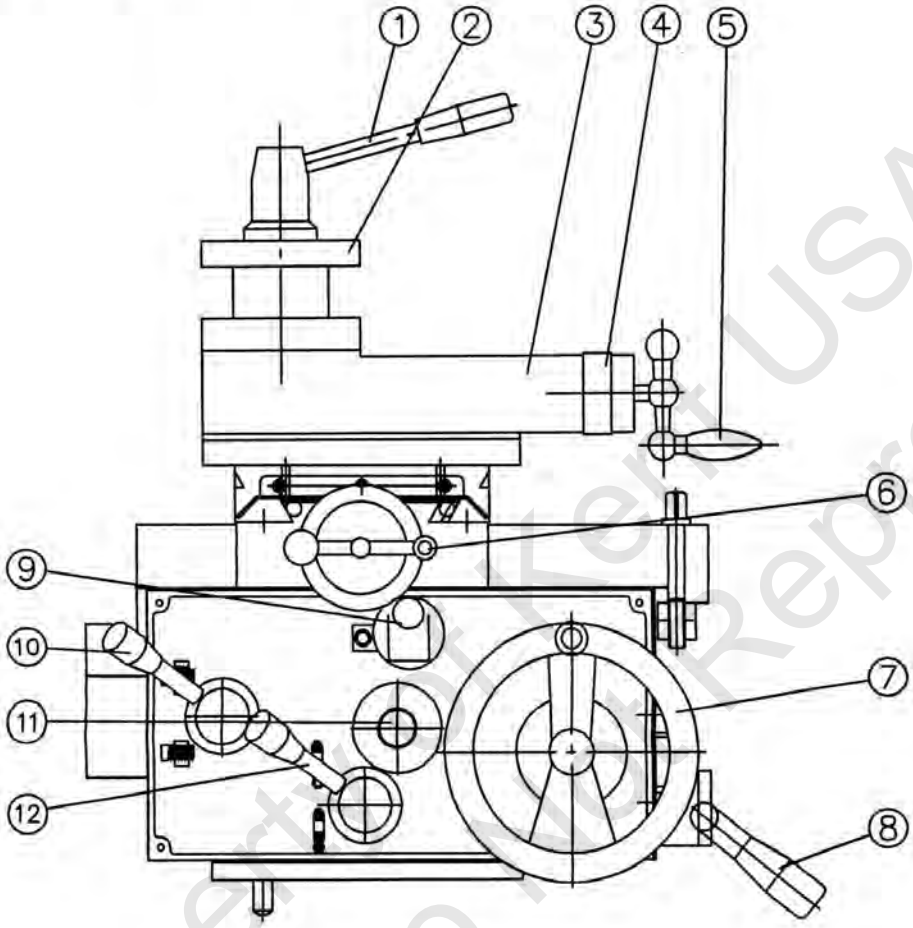

FIG.12

1. CLAMPING LEVER
2. SQUARE TURRET TOOL POST/AMERICAN TOOL POST
3. TOP SLIDE
4. MICRO METER COLLAR
5. TOP SLIDE HANDLE FOR CROSS FEEDS
6. OPERATING HANDLE FOR CROSS FEEDS
7. HAND WHEEL FOR LONGITUDINAL
8. STARTING AND STOPPING LEVER
9. CHANG LEVER FOR AUTOMATIC LONGITUDINAL AND CROSS FEEDS
10. HALF-NUT LEVER
11. FEED FORWARD AND REVERSE LEVER
12. FEEDS STARTING LEVER

Property of Kent USA
Please Do Not Reproduce

TAILSTOCK

Tow step of spindle speed:

A 1 to 1/4 reduction gein gives a fast range quick positioning and slow one principally for drilling operation .(Special order)

Normal speed	5mm/rev.
Reduction speed	1.25 mm/rev.

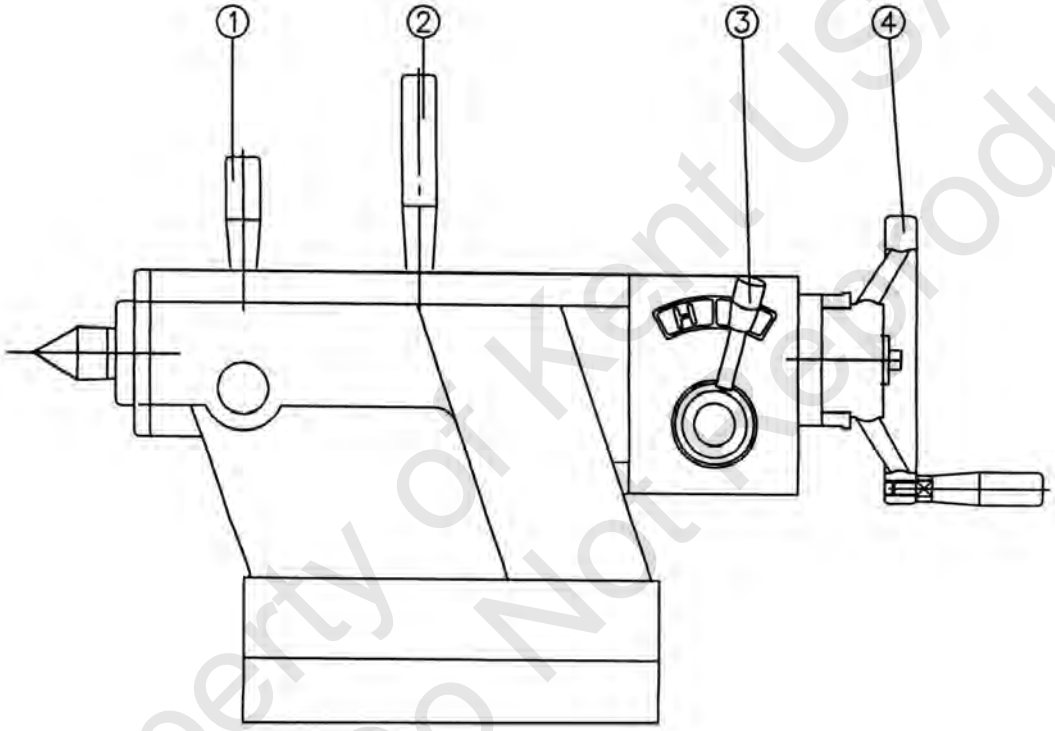

FIG.13

1. CLAMPING LEVER FOR QUILL
2. CLAMPING LEVER FOR TAILSTOCK BODY
3. TAILSTOCK TRAVEL REDUCTION LEVER
4. HANDWHEEL FOR TAILSTOCK QUILL MOVEMENT

Property of Kent USA
Please Do Not Reproduce

BED AND LEVELLING

Levelling of machine itself is very important so that cutting accuracy can be maintained. So occassional levelling check is required very carefully. And for levelling adjustment, please refer to the levelling instruction shown in page No.5 and chart of accuracy.

SPINDLE BEARING ADJUSTMENT

Spindle bearings are already adjusted correotly at our plant befor delivery. So please avoid the unnecessary adjustment except the particular case. When adjustment is needed by the reason of chattering or bearing noise or over temperature etc, adjust only front and middle bearings by loosing or tightening the nut(A)properly, not too tight.

Rear bearing is specially comdined and free from adjustment.

It is recommended that when main spindle is rotated slowly, continuously, to ensure the bearings are not overtighed. Do not over adjust flat spring as this is a eguard against over-heating of bearings.

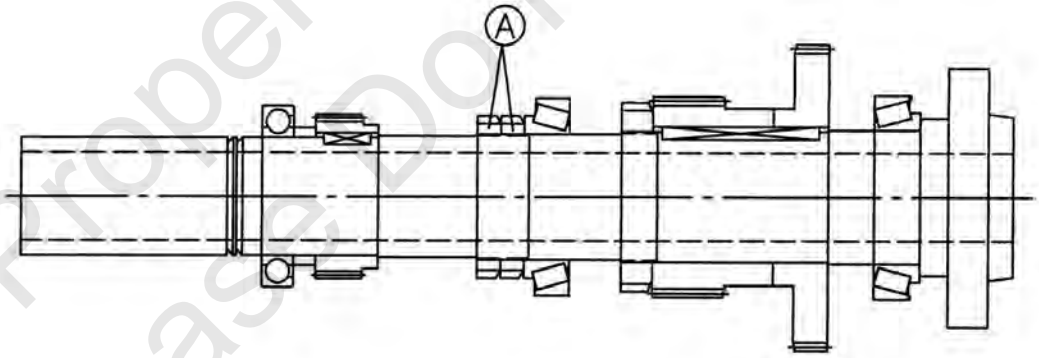

FIG.14

Property of Kent USA
Please Do Not Reproduce

ADJUSTMENT OF TAPER GIB

There is a taper gib on the cross slide and tool slide respectively. Adjust a taper gib in a sucessive order as follows:

Adjustment of a tool slide gib.

1) Loosen an adjusting screw (1) at the rear and tighten an adjusting screw(2) at the front.
2) Turn a tool slide handle and make sure whether a taper gib has been adjusted. If it is well adjusted, then tighten an adjusting screw (1).

Adjustment of a cross slide gib.

Remove a felt cover at the front and loosen an adjusting screw(3) at the front and then tighten an adjusting screw (4) at the rear. The following procedure is same as for tool slide gib.

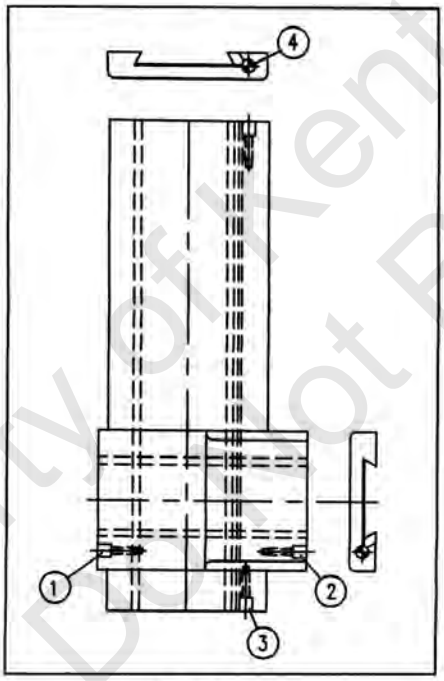

FIG.15

FEMALE SCREW OF CROSS SLIDE

A female screw can be adjusted to minimize a backlash for a cross slide screw. Lossen Bolt (5) to some extent and tighten Screw(6) by a driver. Then the said backlash can be minimized.

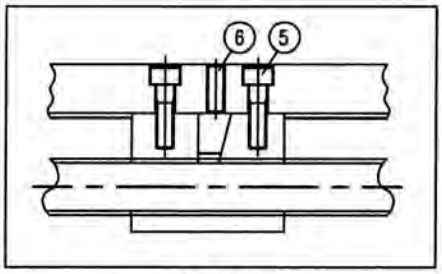

FIG.16

Property of Kent USA
Please Do Not Reproduce

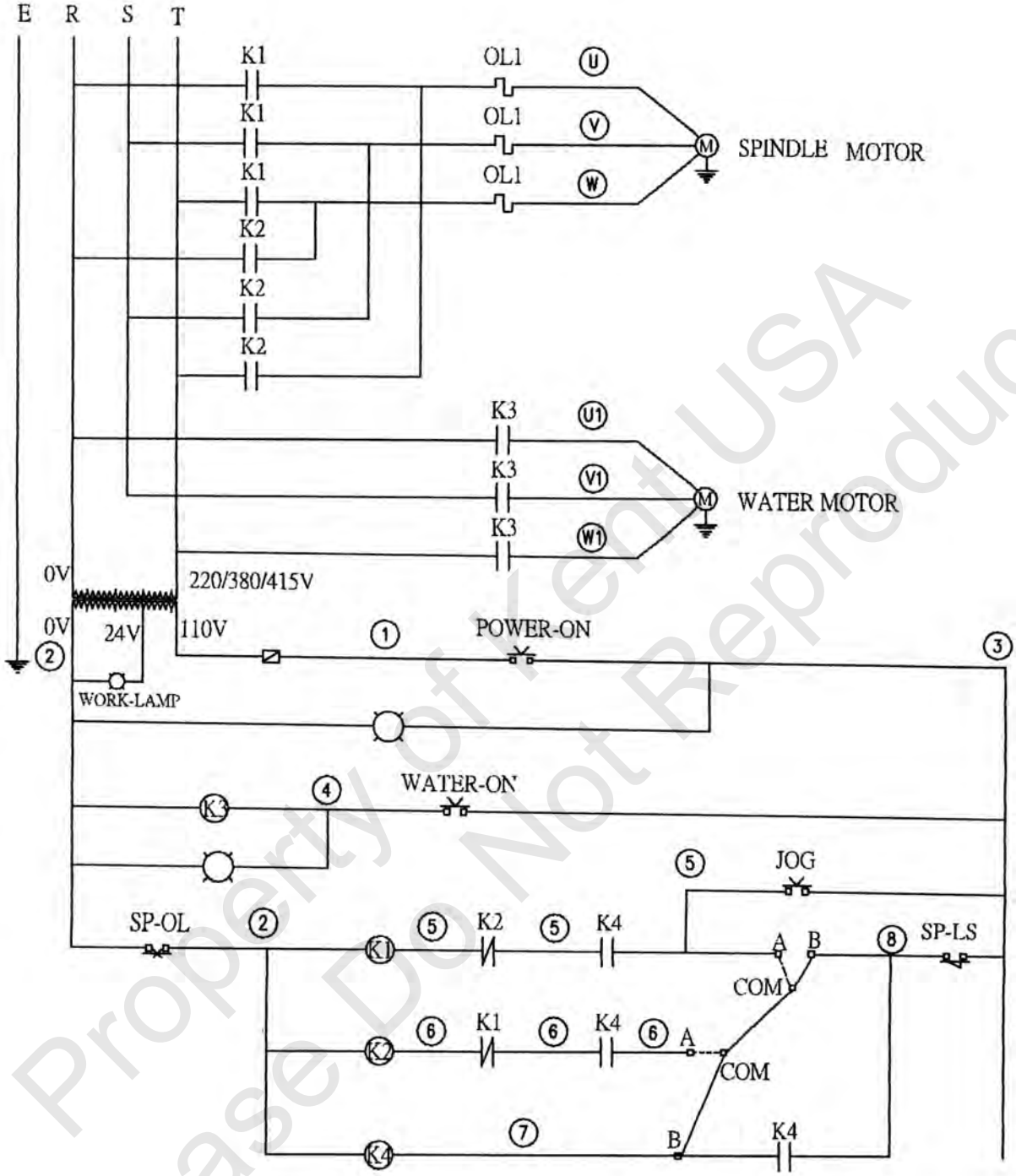

Property of Kent USA
Please Do Not Reproduce

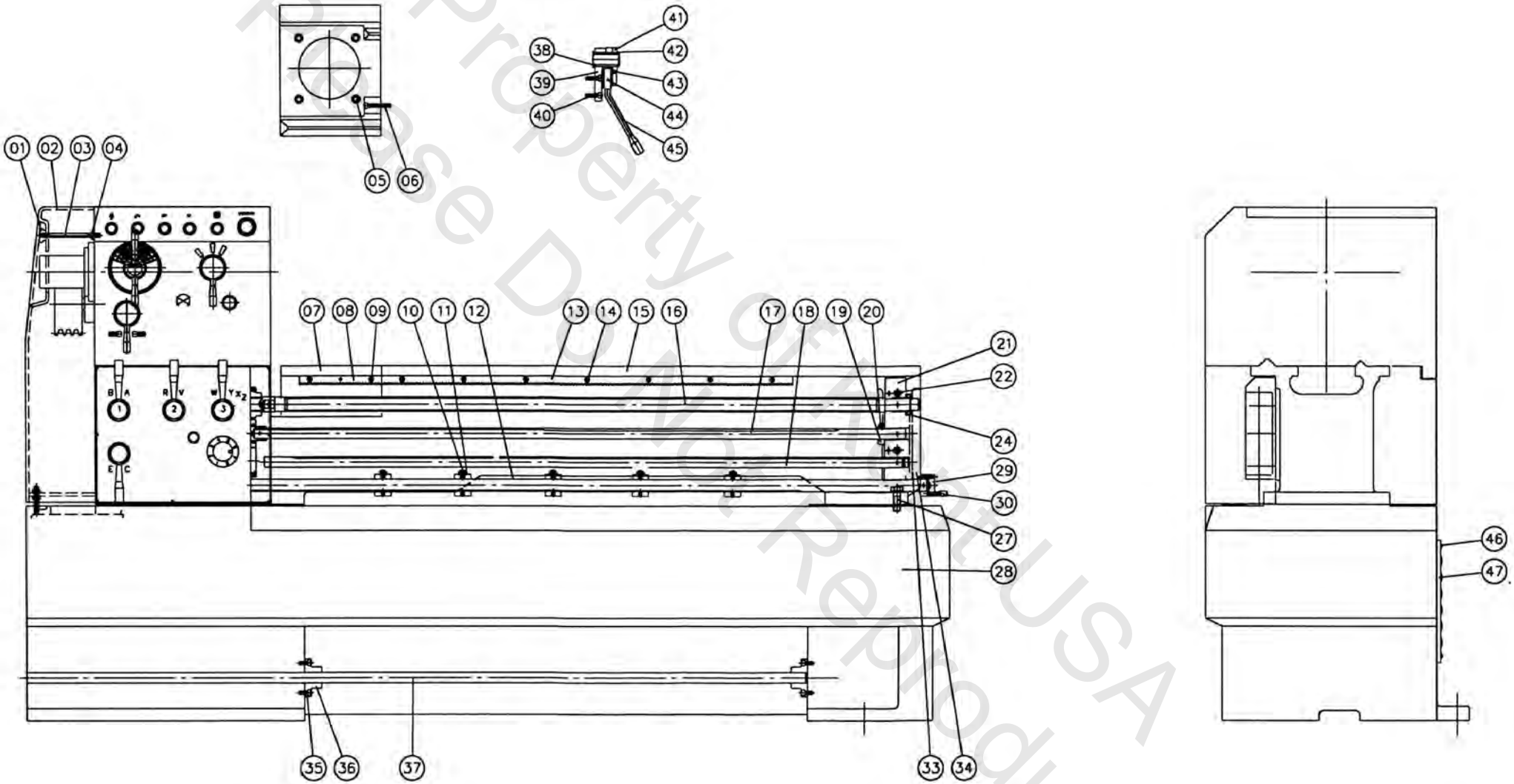

Property of Hobart USA
Please Do Not Reproduce

零 件 表 PARTS LIST				
REF NO.	件 號 PART NO.	零 件 名 稱 DESCRIPTION	規 格 PARTS NAME	數 量 Q'TY
01	C13-1051	NUT		1
02	C13-1049	COVER		1
03	C13-1050	SCREW		1
04		NUT	M10	1
05		SCREW	M12x30L	4
06		SCREW	M8x50L	2
07	C13-1002	GAP		1
08	C13-1036	PACK		1
09		SCREW	M6x20L	2
10	C13-1034	SCREW		5
11	C13-1029-33	STOPING RING		5
12	C13-1028	STOPING RING		1
13	C13-1037	RACK		1
14		SCREW	M6x20L	4
15	C13-1001	BED		1
16	C13-1011	LEAD SCREW		1
17	C13-1012	FEED ROD		1
18	C13-1013	THIRD ROD		1
19	C13-1017	COLLAR		1
20		SCREW	M8x8L	1
21	C13-1009	BRACKET		1
22		SCREW	M10x80L	2
23		NUT	AN30	1
24		BEARING	6204	2
25	C13-1008	COVER		1
26		SCREW	M6x25L	2

Property of Kent USA
Please Do Not Reproduce

零 件 表 PARTS LIST				
REF NO.	件 號 PART NO.	零 件 名 稱 DESCRIPTION	規 格 PARTS NAME	數 量 Q'TY
27		SCREW	M16x50L	4
28	C13-1003	FEED ROD		1
29	C13-1025	HANDLE BOSS		1
30	C13-1026	HANDLE		3
31	C13-1024	BRACKET		2
32		SCREW	M8x20L	4
33		SCREW	M10x10L	2
34	C13-1018	CAM		2
35		SCREW	M8x20L	6
36	C13-1019	BRACKET		2
37	C13-1020	BRAKE ROD		1
38	C13-1004	SLEEVE		1
39	C13-1010	BRACKET		1
40		SCREW	M8x20L	2
41	C13-1005	LEVER SEAT		1
42		SNAP RING	STW35	1
43		SPRING		1
44		PIN		1
45	C13-1006	HANDLE		1
46		SCREW	M6x20L	4
47	C13-1054	COVER		1

Property of Kent USA
Please Do Not Reproduce

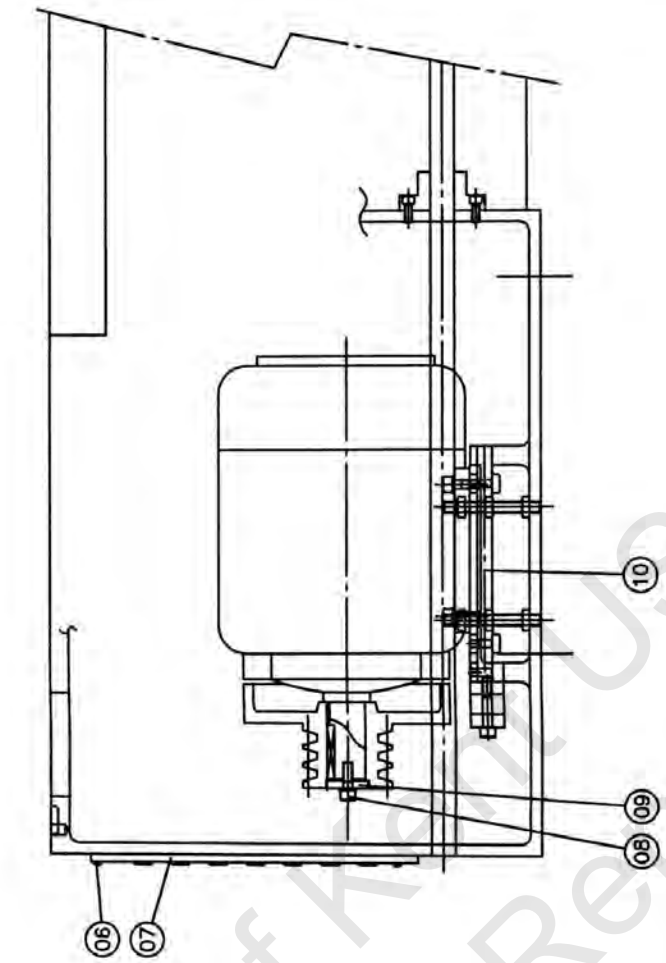

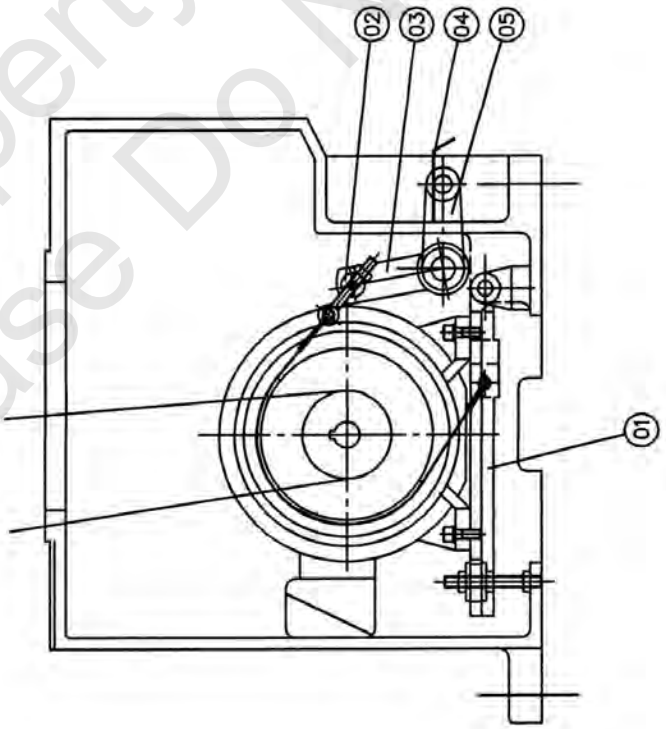

Property of Kent USA
Please Do Not Reproduce

零 件 表
PARTS LIST

REF NO.	件 號 PART NO.	零 件 名 稱 DESCRIPTION	規 格 PARTS NAME	數 量 Q'TY
01	C13-1023	MOTOR BASE		1
02	C13-1021	WASHER		1
03	C13-1022	ARM		1
04	C13-1055	BRAKE FOOT PLATE		1
05	C13-1015	LEVER		1
06		SCREW	M6x16L	4
07	C13-1053	COVER		1
08		SCREW	M10x25L	1
09	C13-1035	WASHER		1
10	C13-1027	SHAFT		1

Property of Kent USA
Please Do Not Reproduce

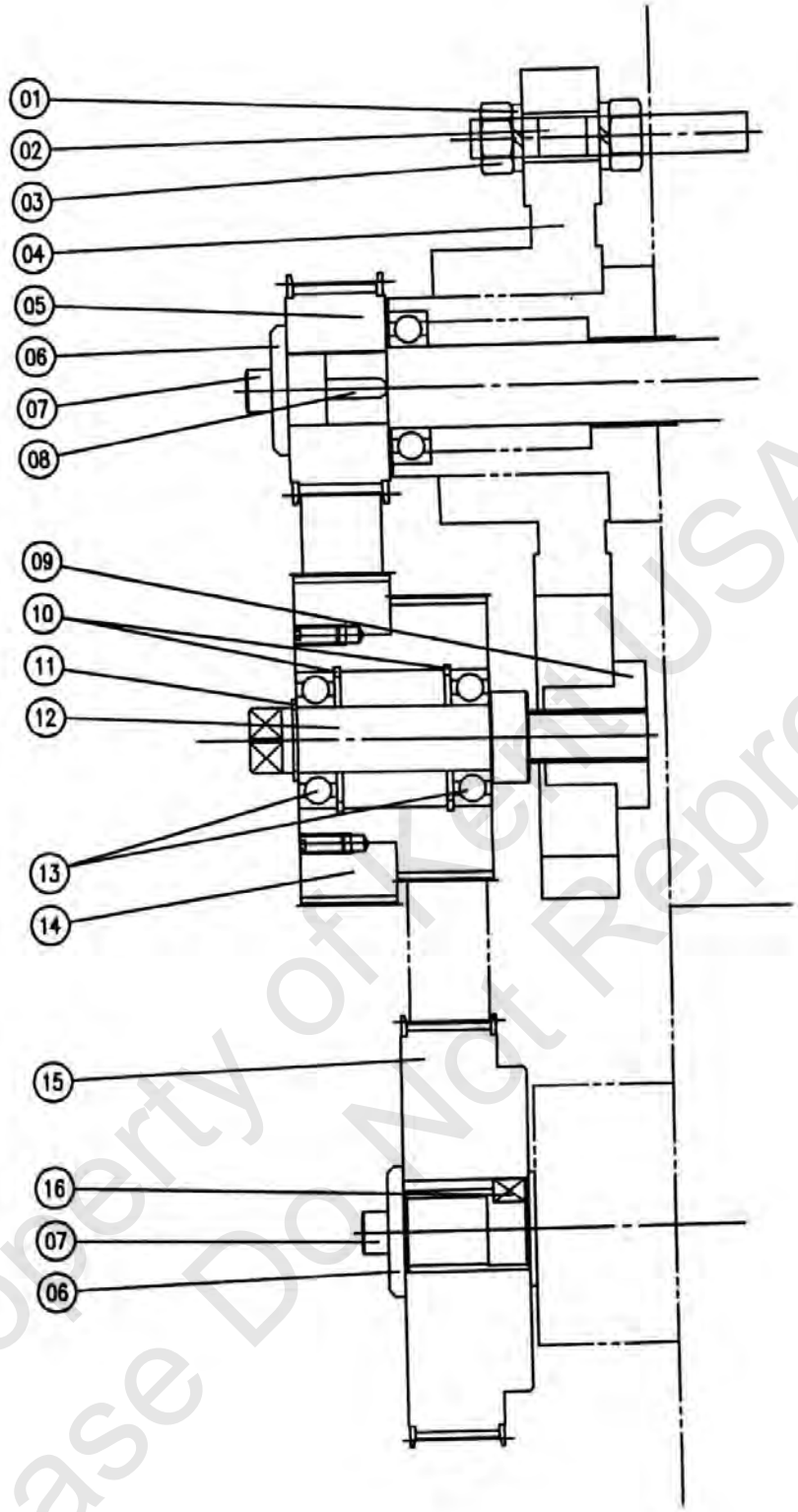

Property of Kent USA
Please Do Not Reproduce

零 件 表
PARTS LIST

REF NO.	件 號 PART NO.	零 件 名 稱 DESCRIPTION	規 格 PARTS NAME	數 量 Q'TY
01		WASHER	M12	2
02	C13-1047	BOLT		1
03		NUT	M12	3
04	C13-1040	SWING FRAME		1
05	CSC-1043	GEAR		1
06	C13-1048	WASHER		2
07		SCREW	M8x20L	2
08		KEY	6x6x15L	1
09	C13-1041	NUT		1
10		SNAP RING	RTW42	2
11		SNAP RING	STW20	1
12	CSC-1046	SHAFT		1
13		BEARING	6004	2
14	CSC-1044	GEAR		1
15	CSC-1045	GEAR		1
16		KEY	7x7x10L	1

Property of Kent USA
Please Do Not Reproduce

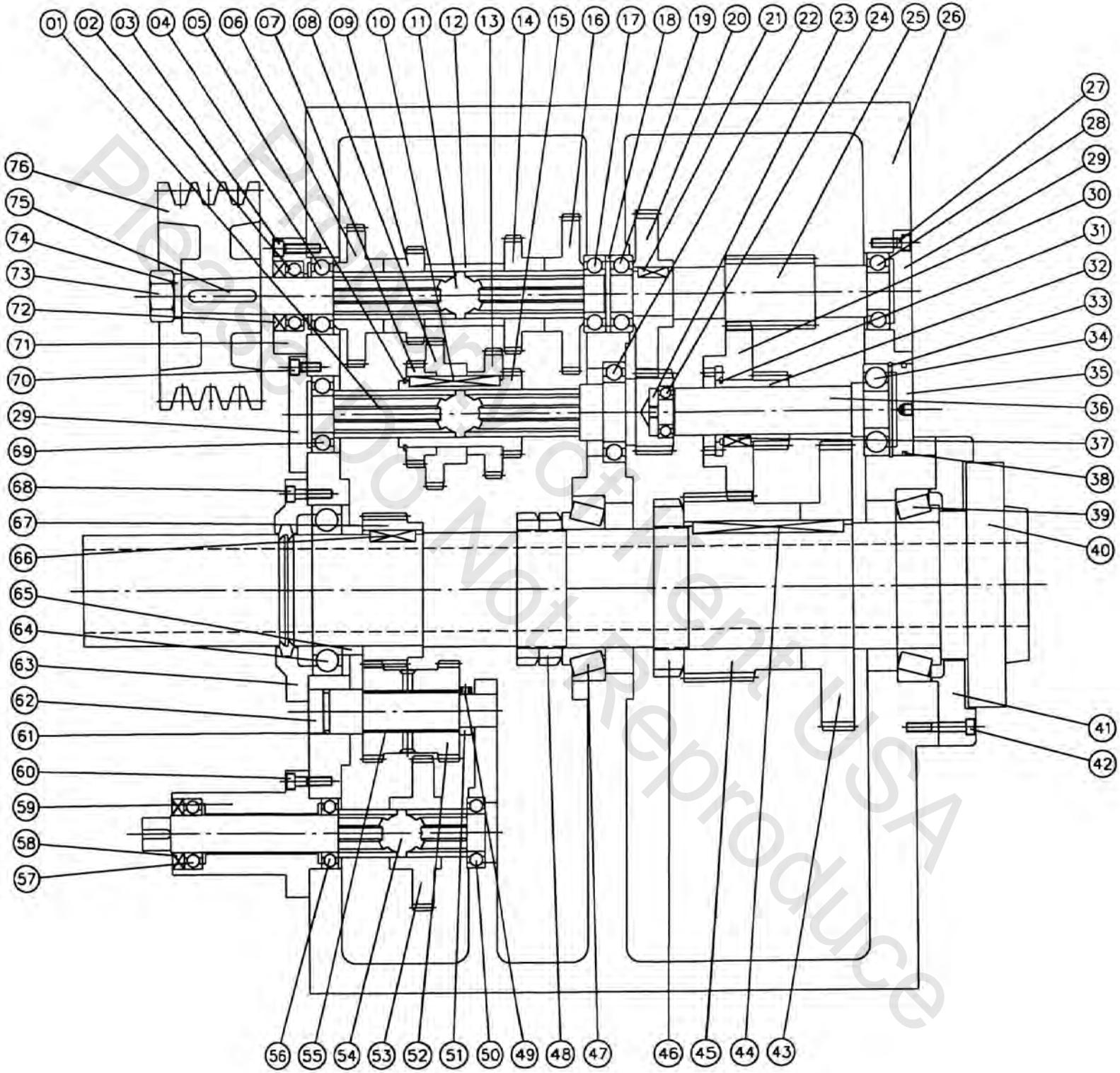

Property of Kentucky Motor Reproduce
Please Do Not Reproduce

零 件 表
PARTS LIST

REF NO.	件 號 PART NO.	零 件 名 稱 DESCRIPTION	規 格 PARTS NAME	數 量 Q'TY
01	C13-2009	SHAFT		1
02		BEARING	6005	1
03		SCREW	M6x20L	3
04		BEARING	6205	1
05		SNAP RING	STW50	1
06	C13-2005	GEAR		1
07	C13-2013	GEAR		1
08	C13-2012	GEAR		1
09	C13-2006	GEAR		1
10		KEY	8x7x60L	1
11	C13-2004	SHAFT		1
12	C13-2028	COLLAR		1
13	C13-2011	GEAR		1
14	C13-2007	GEAR		1
15	C13-2010	GEAR		1
16	C13-2008	GEAR		1
17		BEARING	6205	1
18	C13-2029	COLLAR		1
19		BEARING	6205	1
20	C13-2015	GEAR		1
21		KEY	8x7x20L	1
22		BEARING	6008	1
23	C13-2031	COLLAR		1
24		BEARING	6003	1
25	C13-2014	GEAR		1
26	C13-2001	HEAD STOCK		1

Property of Kent USA
Please Do Not Reproduce

零 件 表 PARTS LIST				
REF NO.	件 號 PART NO.	零 件 名 稱 DESCRIPTION	規 格 PARTS NAME	數 量 Q'TY
27		SCREW	M6x15L	3
28		BEARING	6205	1
29	C13-2030	COVER		1
30	C13-2018	GEAR		1
31		SNAP RING	STW45	1
32	C13-2017	GEAR		1
33		SNAP RING	RTW62	1
34		BEARING	6305	1
35	C13-2032	COVER		1
36	C13-2016	SHAFT		1
37		KEY	8x7x18L	1
38		O-RING	G55	1
39		BEARING	32017	1
40	C13-2003	SPINDLE		1
41	C13-2033	COVER		1
42		SCREW	M6x30L	4
43	C13-2019	GEAR		1
44		KEY	12x8x100L	1
45	C13-2020	GEAR		1
46	C13-2034	NUT		1
47		BEARING	32016	1
48	C13-2035	NUT		2
49		SCREW	M5x6L	1
50		BEARING	6005	1
51	C13-2040	WASHER		1
52	C13-2023	GEAR		1

Property of Kent USA
Please Do Not Reproduce

零 件 表
PARTS LIST

REF NO.	件 號 PART NO.	零 件 名 稱 DESCRIPTION	規 格 PARTS NAME	數 量 Q'TY
53	C13-2025	GEAR		1
54	C13-2024	SHAFT		1
55		BUSHER	70B-2520	2
56		BEARING	6005	1
57		BEARING	6005	1
58		OIL SEAL	TC254708	1
59	C13-2041	FLANGED BEARING		1
60		SCREW	M6x20L	3
61		O-RING	G25	1
62	C13-2022	SHAFT		1
63	C13-2037	COVER		1
64		BEARING	6015	1
65	C13-2036	COLEAR		1
66		KEY	12x8x30L	1
67	C13-2021	GEAR		1
68		SCREW	M6x20L	3
69		BEARING	6205	1
70		SCREW	M6x15L	3
71	C13-2027	FLANGED BEARING		1
72		OIL SEAL	TC254708	1
73		NUT	M25	1
74		WASHER	M25	1
75		KEY	8x7x40L	1
76	C13-2026	PULLEY		1

Property of Kent USA
Please Do Not Reproduce

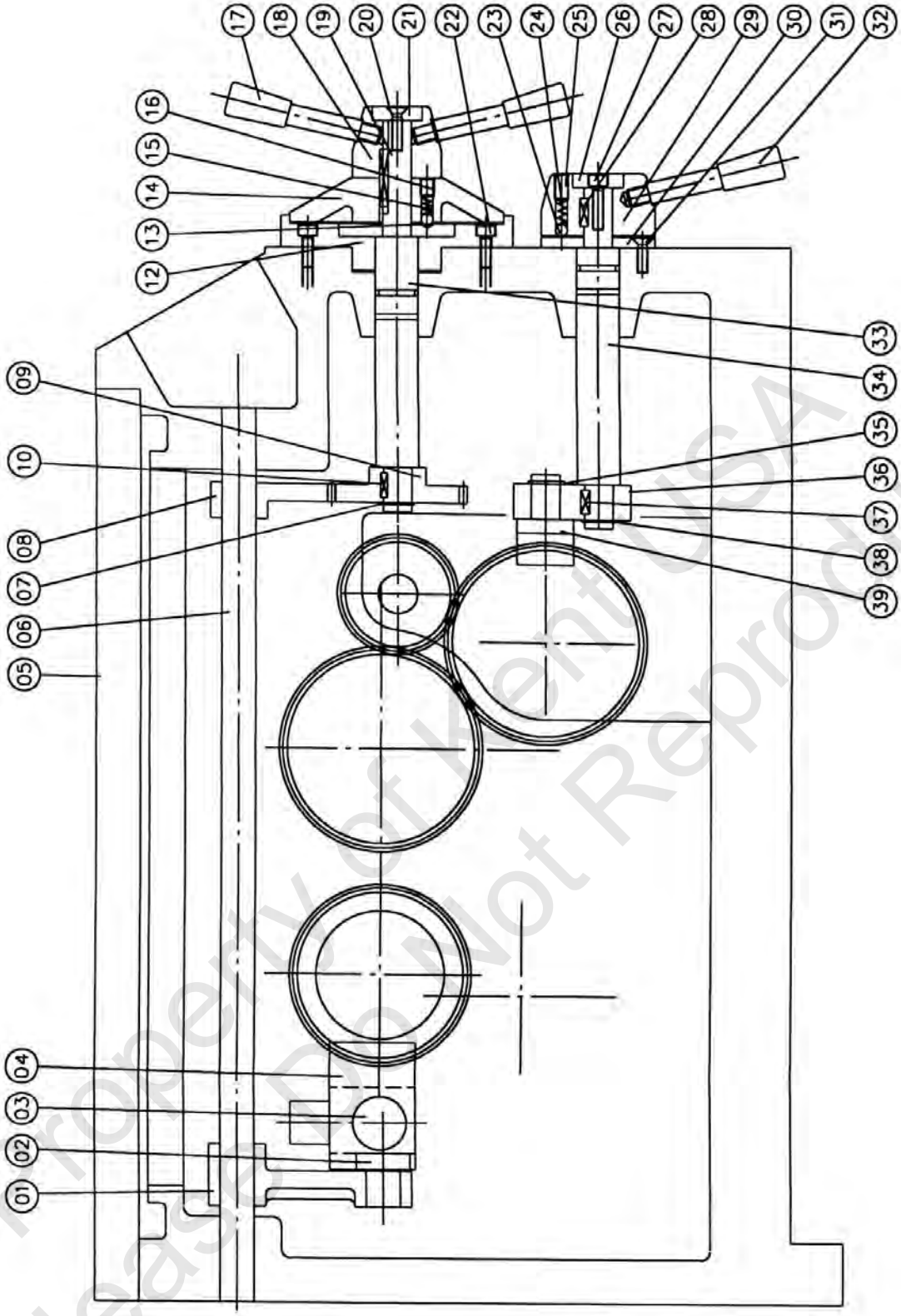

Property of Kent USA
Please Do Not Reproduce

零 件 表
PARTS LIST

REF NO.	件 號 PART NO.	零 件 名 稱 DESCRIPTION	規 格 PARTS NAME	數 量 Q'TY
01	C13-2052	LEVER	M6x20L	1
02	HL-2032	FORK		1
03	C13-2073	SHAFT		1
04	C13-2054	SLIDE		1
05	C13-2002	COVER		1
06	C13-2050	SHAFT		1
07		SNAP RING	STW16	2
08	C13-2049	GEAR		1
09	C13-2047	GEAR		2
10		KEY	5x5x16L	1
11	C13-2048	SHAFT		1
12	C13-2044	INDICATOR		1
13		STEEL BALL	ϕ1/4"	1
14	C13-2043	SPEED SELECTOR		1
15		SPRING		1
16		SCREW	M8x12L	1
17		HANDLE		2
18	C13-2042	HANDLE BOSS		1
19		KEY	5x5x40L	1
20		WASHER		1
21		SCREW	M6x25L	1
22		SCREW	M5x15L	4
23		STEEL BALL	ϕ1/4"	1
24		SPRING		1
25		SCREW	M8x12L	1
26		WASHER		1

Property of Kent USA
Please Do Not Reproduce

零 件 表
PARTS LIST

REF NO.	件 號 PART NO.	零 件 名 稱 DESCRIPTION	規 格 PARTS NAME	數 量 Q'TY
27		SCREW	M6x20L	1
28		KEY	5x5x25L	1
29	C13-2055	HANDLE BOSS		1
30	C13-2045	COLLAR		2
31		SCREW	M6x15L	4
32		HANDLE		1
33	C13-2046	SHAFT		1
34	C13-2056	SHAFT		1
35		SNAP RING	STW16	1
36	C13-2057	LEVER		1
37		KEY	5x5x16L	1
38		SNAP RING	STW16	1
39	C13-2058	FORK		1

Property of Kent USA
Please Do Not Reproduce

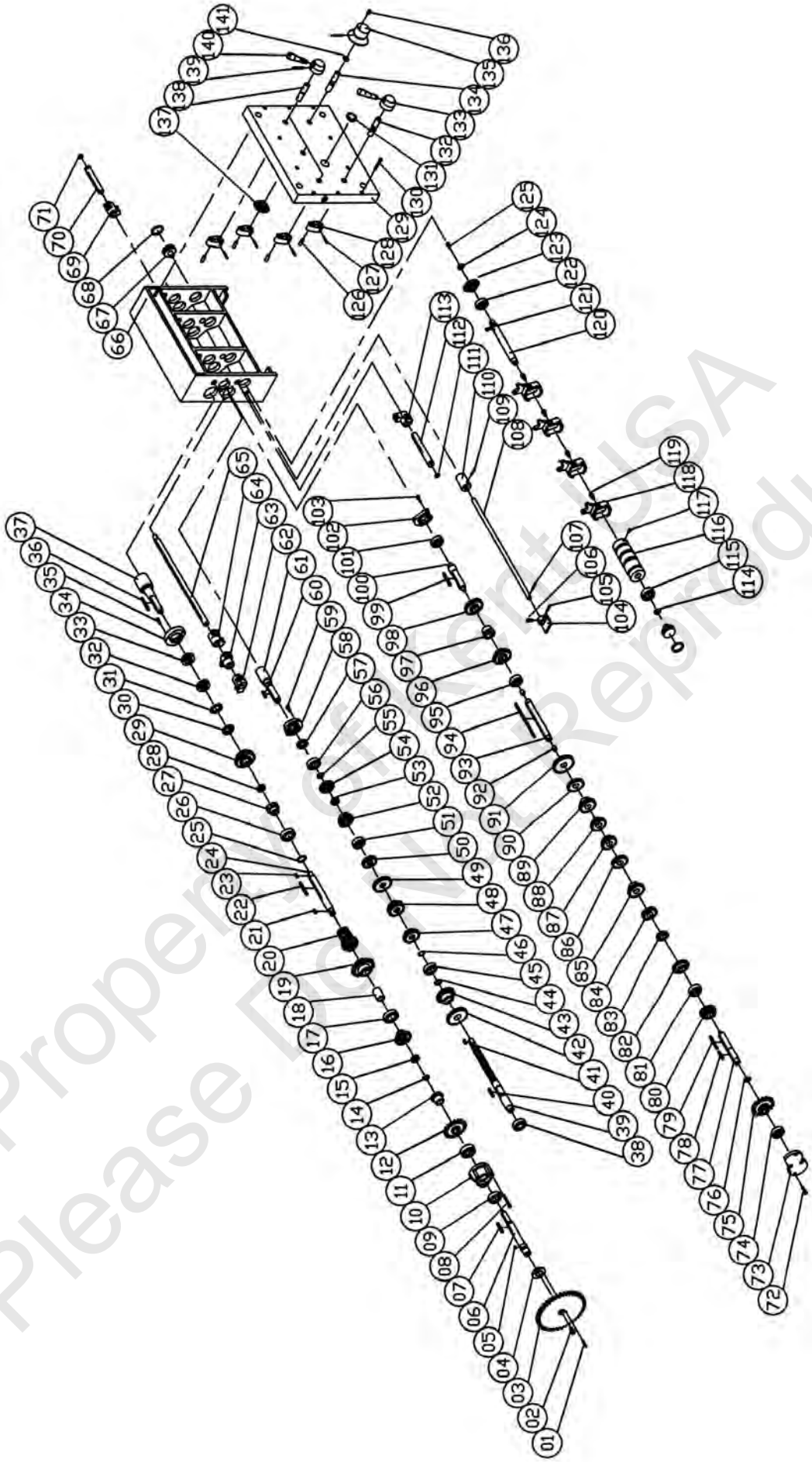

Property of Kert USA
Please DO NOT Reproduce

PARTS LIST

*** GEAR BOX ***

NO	PARTS NAME	PARTS NO	DESCRIPTION	Q'TY	REMARK
1	Pin		ϕ 4.3*30L	1	
2	Bolt		M8*12L	1	
3	Gear	13G-006	M2*76T	1	
4	Bushing	13G-074		1	
5	Key		4*4*10L	1	
6	Shaft	13G-049		1	
7	Key		5*5*40L	1	
8	Bolt		M6*45L	3	
9	Bearing		#6004	1	
10	Bearing stand	13G-057		1	
11	Bearing		#6204	1	
12	Gear	13G-007	M2*34T	1	
13	Gear	13G-008	M2*17T	1	
14	Snap Ring		S-20	1	
15	Bearing		#6000	1	
16	Gear	13G-009	M2.5*19T	1	
17	Bearing		#6005	1	
18	Sleeve			1	
19	Gear	13G-010	M2*34T	1	
20	Gear	13G-011	DP12*23T/M2*17T	1	
21	Key		5*5*15L	1	
22	Key		5*5*55L	1	
23	key		5*5*15L	1	
24	Shaft	13G-050		1	
25	Snap Ring		S-25	1	
26	Bearing		#6005	1	
27	Clutch	13G-012		1	
28	Bearing		#6000	1	
29	Gear	13G-013	DP14*35T/M1.25*35T	1	
30	Nut		AN05	1	
31	Washer		AW05	1	
32	Bearing		#51105	1	
33	Bearing		#51105	1	
34	Bearing Stand	13G-058		1	
35	Bolt		M6*16L	3	
36	Key		5*5*55L	1	
37	Shaft	13G-051		1	
38	Bearing		#6004	1	
39	Shaft	13G-055		1	
40	Key		5*5*35L	1	
41	Key		5*5*15L	1	
42	Gear	13G-029	M2*33T	1	
43	Gear	13G-030	M2.5*22T	1	
44	Snap Ring		S-22	1	
45	Bearing		#6004	1	

Property of Kent USA
Please Do Not Reproduce

PARTS LIST

*** GEAR BOX ***

NO	PARTS NAME	PARTS NO	DESCRIPTION	Q'TY	REMARK
46	Snap Ring		S-20	1	
47	Gear	13G-031	M2.25*22T	1	
			46 Sleeve		
	2				
48	Gear	13G-032	DP12*22T	1	
49	Gear	13G-033	M1.75*33T	1	
50	Gear	13G-034	M2*22T	1	
51	Bearing		#6203	1	
52	Gear	13G-035	M2.25*20T	1	
53	Bearing		#6000	1	
54	Gear	13G-036	M1.25*36T	1	
55	Snap Ring		S-20	1	
56	Bearing		#6004	1	
57	Oil Seal			1	
58	O Ring	13G-061	P-18	1	
59	Bolt		M6*16L	2	
60	Key		5*5*25L	1	
61	Shaft	13G-056		1	
62	Rack	13G-062		1	
63	Rack	13G-063		1	
64	Rack	13G-064		1	
65	Shaft	13G-048		1	
66	Gear Box			1	
67	Oil Riug	13G-069		1	
68	Oil Ring		G-35	1	
69	Rack	13G-066		1	
70	Shaft	13G-046		1	
71	O Ring		P-18	1	
72	Bolt		M6*20L	4	
73	Bearing Cover	13G-059		1	
74	Bearing		#6203	1	
75	Gear		M2*17T/34T	1	
76	Snap Ring	13G-014	S-20	1	
77	Shaft	13G-052		1	
78	Key		5*5*35L	1	
79	Key		5*5*55L	1	
80	Gear	13G-015	M2*19T/M2.5*19T	1	
81	Bearing		#6203	1	
82	Gear	13G-016	M2.25*22T	1	
83	Gear	13G-017	M2*17T	1	
84	Gear	13G-018	M2.25*20T	1	
85	Gear	13G-019	DP12*24T	1	
86	Gear	13G-020	DP12*23T	1	
87	Gear	13G-021	M1.75*27T	1	
88	Gear	13G-022	M1.75*24T	1	
89	Gear	13G-023	M2*28T	1	
90	Gear	13G-024	M2*26T	1	

Property of Kart USA
Please Do Not Reproduce

PARTS LIST

*** GEAR BOX ***

NO	PARTS NAME	PARTS NO	DESCRIPTION	Q'TY	REMARK
91	Gear	13G-025	M2*34T	1	
92	Sleeve			2	
93	Shaft	13G-053		1	
94	Key		5*5*148L	1	
95	Bearing		#6203	1	
96	Gear	13G-026	M2.25*25T	1	
97	Gear	13G-027	DP14*18T	1	
98	Gear	13G-028	M1.25*45T	1	
99	Key		5*5*55L	1	
100	Shaft	13G-054		1	
101	Bearing		#6203	1	
102	Bearing Stand	13G-060		1	
103	Bolt		M6*16L	2	
104	Rack			1	
105	Pin		φ4*24L	1	
106	Bolt	13G-020	M6*12L	1	
107	Pin			1	
108	Shaft	13G-044		1	
109	Pin		φ4*24L	1	
110	Sleeve	13G-043		1	
111	Oil Ring		P-13	1	
112	Shaft	13G-045		1	
113	Rack	13G-065		1	
114	Snap Ring		S-17	1	
115	Bearing		#6203	1	
116	Worm	13G-068		1	
117	Set Screw		M8*12L	1	
118	Regulator	13G-067		4	
119	Bolt		M8*12L	4	
120	Shaft	13G-047		1	
121	Key		5*5*15L	1	
122	Bearing		#6203	1	
123	Gear	13G-037	M2*25T	1	
124	Washer			1	
125	Bolt		M6*12L	1	
126	Pin		φ5/16"*30L	4	
127	Pin		φ4*28L	4	
128	Rack	13G-071		4	
129	Bolt		M6*40L	10	
130	Gear Casting			1	
131	Cover			1	
132	Change Level	13G-039		1	
133	Hub			1	
134	Change Level	13G-040		1	
135	Handle	13G-041		1	

Property of Kent USA
Please Do Not Reproduce

PARTS LIST

*** GEAR BOX ***

NO	PARTS NAME	PARTS NO	DESCRIPTION	Q'TY	REMARK
136	Set Screw		M8*15L	1	
137	Gear		M2*2.5T	1	
138	Change Level	13G-038		1	
139	Pin		ϕ 5*40L	1	
140	Handle			1	
141	O Ring		P-11	1	

Property of Kent USA
Please Do Not Reproduce

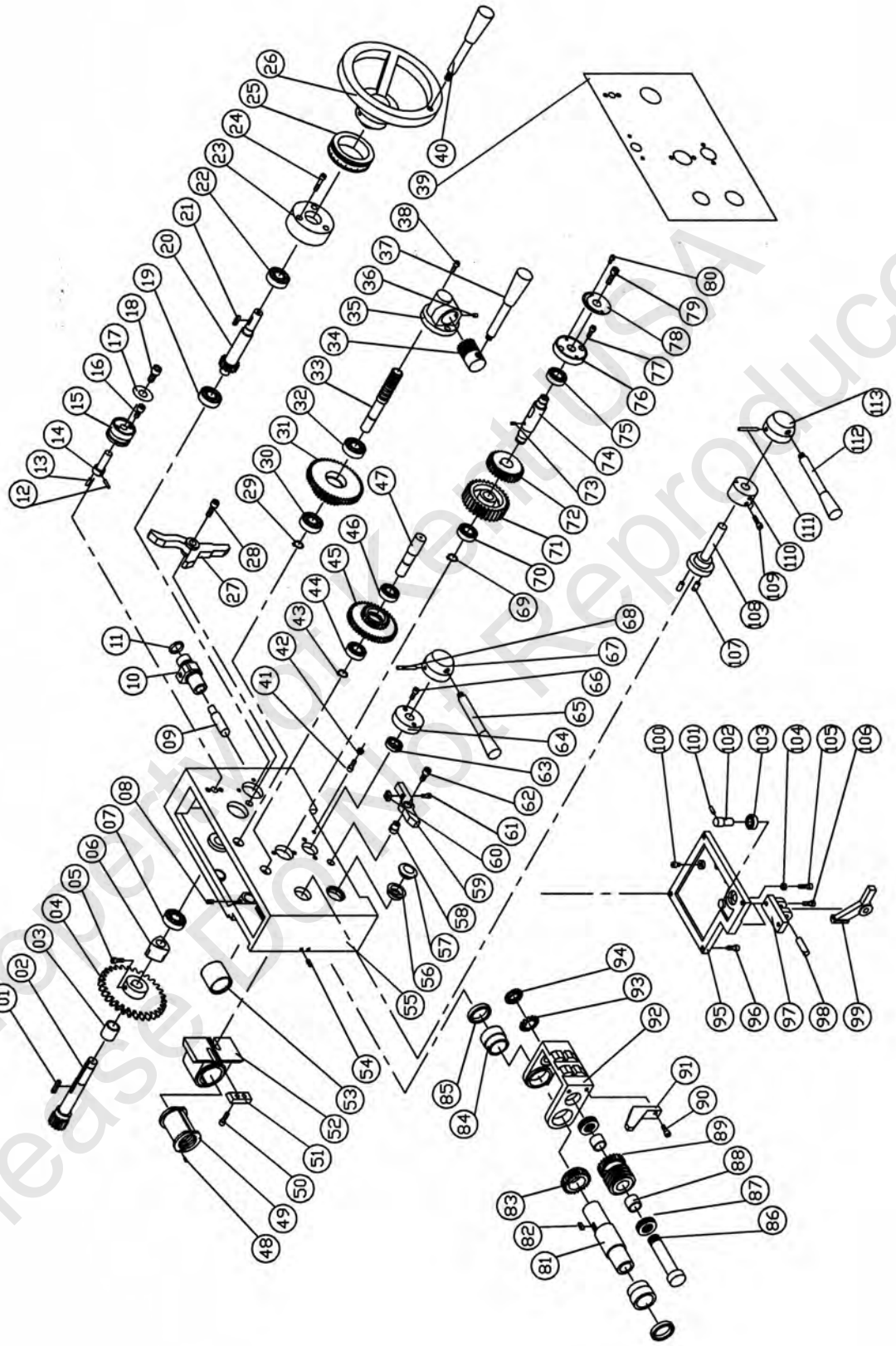

Property of Kent USA
Please Do Not Reproduce

PARTS LIST

*** RIGHT APRON ***

NO	PARTS NAME	PARTS NO	DESCRIPTION	Q'TY	REMARK
1	Key		5*5*25L	1	
2	Gear Shaft	13A-009	M2*14T	1	
3	DU Bearing		DU20/25	1	
4	Gear	13A-008	M2*60T	1	
5	Screw		M6*15L	1	
6	Cam	13A-052		1	
7	Bearing		#6203	1	
8	Set Screw		M6*12L	1	
9	Pump Rod	13A-055		1	
10	Pump Stand	13A-054		1	
11	Snap Ring		P-17	1	
12	Pin		φ4*18L	1	
13	Pin		φ5*14L	1	
14	Shaft			1	
15	Bushing			1	
16	Bolt		M8*15L	2	
17	Nume Plate			1	
18	Bolt		M8*6L	1	
19	Bearing		#6203	1	
20	Gear Shaft	13A-010	M2*15T	1	
21	Key		5*5*20L	1	
22	Bearing		#6203	1	
23	Bushing			1	
24	Bolt		M6*30L	3	
25	Index Ring	13A-047		1	
26	Hand Wheel	13A-045		1	
27	Bracket	13A-053		1	
28	Bolt		5/16"*1"	1	
29	Snap Ring		S-17	1	
30	Bearing		#6203	1	
31	Gear	13A-015	M2*51T/30T	1	
32	Bearing		#6203	1	
33	Shaft	13A-031		1	
34	Pin			1	
35	Pedestal	13A-036		1	
36	Set Screw		M6*16L	1	
37	Handle			1	
38	Screw		M6*16L	2	
39	Face Plate			1	
40	Handle			1	
41	Bolt		M8*25L	1	
42	Nut		M6	1	
43	Snap Ring			1	
44	Bearing		#6003	1	
45	Gear	13A-007	M2*24T/45T	1	

Property of Kent USA
Please Do Not Reproduce

PARTS LIST

*** RIGHT APRON ***

NO	PARTS NAME	PARTS NO	DESCRIPTION	Q'TY	REMARK
46	Bearing		#6003	1	
47	Shaft	13A-030		1	
48	Pin		φ 3*8L	4	
49	Sleeve	13A-041		1	
50	Bolt		M6*20L	2	
51	Regulator			1	
52	Bracket	13A-040		1	
53	Sleeve	13A-037		1	
54	Set Screw		M6*12L	2	
55	Apron Box			1	
56	Sleeve			1	
57	Cover			1	
58	Shaft	13A-021		1	
59	Rocker Arm	13A-018		1	
60	Nut			1	
61	Bolt		M5*12L	1	
62	Bolt		M8*15L	1	
63	Oil Seal		φ 16*φ 30*7L	1	
64	Bearing stand			1	
65	Handle			1	
66	Bolt		M6*16L	3	
67	Hub			1	
68	Pin		φ 5*40L	1	
69	Snap Ring		S-17	1	
70	Bearing		#6003	1	
71	Worm Wheel	13A-005	M2.5*31T	1	
72	Gear	13A-006	M2*32T	1	
73	Spring Pin		φ 4*8L	1	
74	Shaft	13A-026		1	
75	Bearing		#6003	1	
76	Bushing	13A-029		1	
77	Bolt		M6*10L	2	
78	Nume Plate	13A-050		1	
79	Bolt		M8*25L	1	
80	Bolt		M5*10L	2	
81	Shaft	13A-012		1	
82	Key		5*5*15L	1	
83	Gear	13A-003	M2*23T	1	
84	Bushing	13A-013		2	
85	Oil Seal		φ 32*φ 42*7L	2	
86	Shaft			1	
87	Bearing		#51104	2	
88	DU Bearing			2	
89	Worm	13A-004	M25/M2*23T	1	
90	Bolt		M6*15L	2	

Property of Kent USA
Please Do Not Reproduce

PARTS LIST

*** RIGHT APRON ***

NO	PARTS NAME	PARTS NO	DESCRIPTION	Q'TY	REMARK
91	Rack	13A-035		1	
92	Bracket	13A-002		1	
93	Washer		AW04	1	
94	Nut		AN04	1	
95	Guard	13A-043		1	
96	Bolt		M6*16L	4	
97	Bracket	13A-034		1	
98	Pin		φ 10*30L	1	
99	Rack	13A-033		4	
100	Bolt		M6*8L	2	
101	Pin		φ 5*14L	1	
102	Sture	13A-039		1	
103	Oil Seal		φ 12*φ 25*4.5	1	
104	Nut		M6	1	
105	Bolt		M6*20L	1	
106	Bolt		M6*16L	2	
107	Pin		φ 5/16"*12L	1	
108	Shaft	13A-038		1	
109	Bolt		M6*20L	2	
110	Rocker Block	13A-036		1	
111	Pin		φ 5*40L	1	
112	Handle			1	
113	Hub			1	

Property of Keif USA
Please Do Not Reproduce

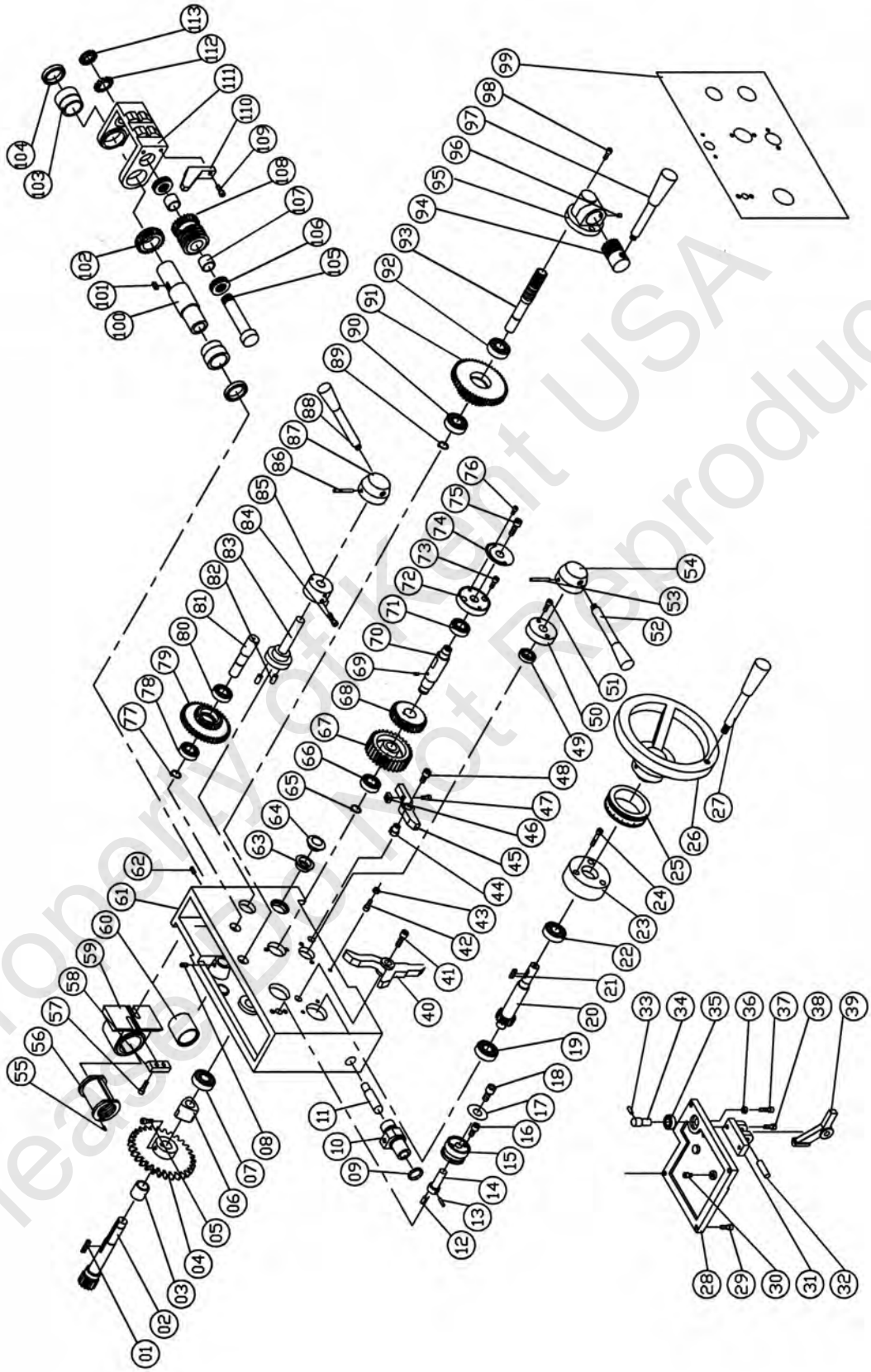

Property of Kent USA
Please Do Not Reproduce

PARTS LIST

*** LEFT APRON ***

NO	PARTS NAME	PARTS NO	DESCRIPTION	Q'TY	REMARK
1	Key		5*5*25L	1	
2	Gear Shaft	13A-009	M2*14T	1	
3	DU Bearing		DU20/25	1	
4	Gear	13A-008	M2*60T	1	
5	Screw		M6*15L	1	
6	Cam	13A-052		1	
7	Bearing		#6203	1	
8	Set Screw		M6*12L	1	
9	Snap Ring		P-17	1	
10	Pump Stand	13A-054		1	
11	Pump Rod	13A-055		1	
12	Pin		φ5*14L	1	
13	Pin		φ4*18L	1	
14	Shaft			1	
15	Bushing			1	
16	Bolt		M8*15L	2	
17	Nume Plate			1	
18	Bolt		M8*6L	1	
19	Bearing		#6203	1	
20	Gear Shaft	13A-010	M2*15T	1	
21	Key		5*5*20L	1	
22	Bearing		#6203	1	
23	Bushing			1	
24	Bolt		M6*30L	3	
25	Index Ring	13A-047		1	
26	Hand Wheel	13A-045		1	
27	Handle			1	
28	Guard	13A-043		1	
29	Bolt		M6*16L	4	
30	Bolt		M6*8L	2	
31	Bracket	13A-034		1	
32	Pin		φ10*30L	1	
33	Pin		φ5*14L	1	
34	Sture	13A-039		1	
35	Oil Seal		φ12*φ25*4.5	1	
36	Nut		M6	1	
37	Bolt		M6*20L	1	
38	Bolt		M6*16L	2	
39	Rack	13A-033		4	
40	Bracket	13A-053		1	
41	Bolt		5/16"*1"	1	
42	Bolt		M8*25L	1	
43	Nut		M6	1	
44	Shaft	13A-021		1	
45	Rocker Arm	13A-018		1	

Property of Kent USA
Please Do Not Reproduce

PARTS LIST

*** LEFT APRON ***

NO	PARTS NAME	PARTS NO	DESCRIPTION	Q'TY	REMARK
46	Nut			1	
47	Bolt		M5*12L	1	
48	Bolt		M8*15L	1	
49	Oil Seal		φ16*φ30*7L	1	
50	Bearing stand			1	
51	Bolt		M6*16L	3	
52	Handle			1	
53	Pin		φ5*40L	1	
54	Hub			1	
55	Pin		φ3*8L	4	
56	Sleeve	13A-041		1	
57	Bolt		M6*20L	2	
58	Regulator			1	
59	Bracket	13A-040		1	
60	Sleeve	13A-037		1	
61	Apron Box			1	
62	Set Screw		M6*12L	2	
63	Sleeve			1	
64	Cover			1	
65	Snap Ring		S-17	1	
66	Bearing		#6003	1	
67	Worm Wheel	13A-005	M2.5*31T	1	
68	Gear	13A-006	M2*32T	1	
69	Spring Pin		φ4*8L	1	
70	Shaft	13A-026		1	
71	Bearing		#6003	1	
72	Bushing	13A-029		1	
73	Bolt		M6*10L	2	
74	Nume Plate	13A-050		1	
75	Bolt		M8*25L	1	
76	Bolt		M5*10L	2	
77	Snap Ring			1	
78	Bearing		#6003	1	
79	Gear	13A-007	M2*24T/45T	1	
80	Bearing		#6003	1	
81	Shaft	13A-030		1	
82	Pin		φ5/16"*12L	1	
83	Shaft	13A-038		1	
84	Bolt		M6*20L	2	
85	Rocker Block	13A-036		1	
86	Pin		φ5*40L	1	
87	Hub			1	
88	Handle			1	
89	Snap Ring		S-17	1	
90	Bearing		#6203	1	

Property of Kent USA
Please Do Not Reproduce

PARTS LIST

*** LEFT APRON ***

NO	PARTS NAME	PARTS NO	DESCRIPTION	Q'TY	REMARK
91	Gear	13A-015	M2*51T/30T	1	
92	Bearing		#6203	1	
93	Shaft	13A-031		1	
94	Pin			1	
95	Pedestal	13A-036		1	
96	Set Screw		M6*16L	1	
97	Handle			1	
98	Screw		M6*16L	2	
99	Face Plate			1	
100	Shaft	13A-012		1	
101	Key		5*5*15L	1	
102	Gear	13A-003	M2*23T	1	
103	Bushing	13A-013		2	
104	Oil Seal		φ 32* φ 42*7L	2	
105	Shaft			1	
106	Bearing		#51104	2	
107	DU Bearing			2	
108	Worm	13A-004	M25/M2*23T	1	
109	Bolt		M6*15L	2	
110	Rack	13A-035		1	
111	Bracket	13A-002		1	
112	Washer		AW04	1	
113	Nut		AN04	1	

Property of Kent USA
Please Do Not Reproduce

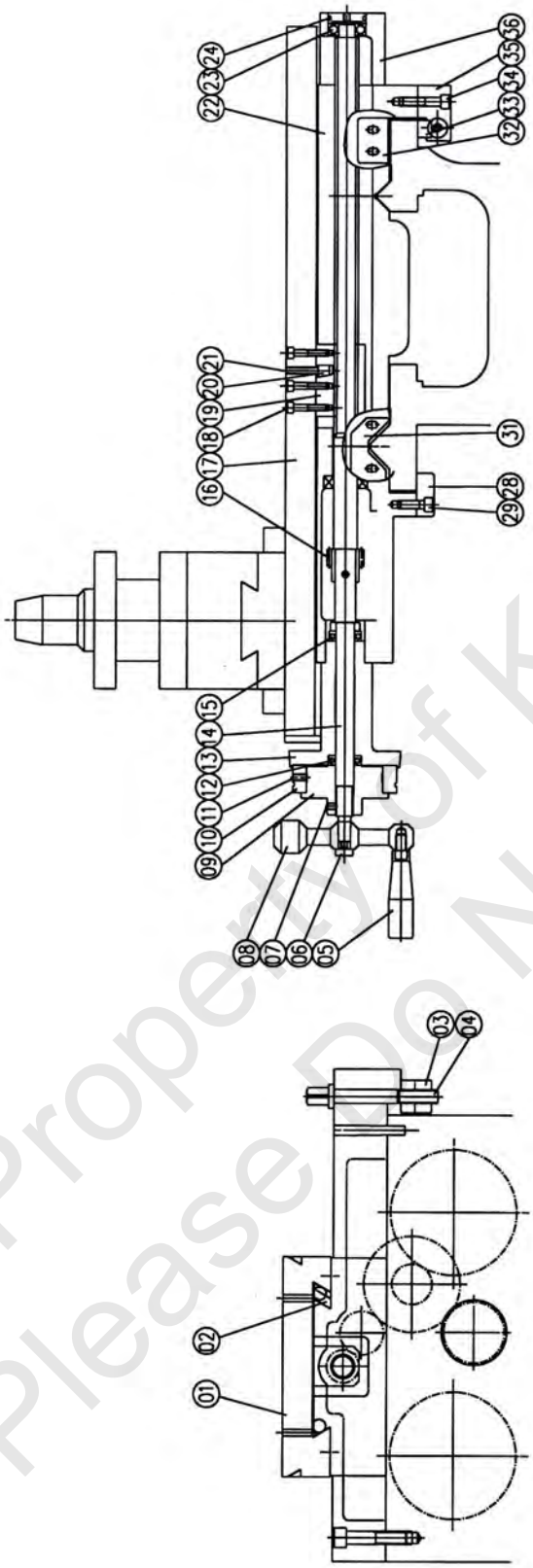

Property of Kent USA
Please Do Not Reproduce

零 件 表 PARTS LIST				
REF NO.	件 號 PART NO.	零 件 名 稱 DESCRIPTION	規 格 PARTS NAME	數 量 Q'TY
01	C13-5020	WIPER		1
02	C13-5016	GIB		1
03	C13-5019	CLAMP NUT		1
04	C13-5017	BOLT		1
05		HANDLE	M10	1
06	C13-5009	SCREW	M6	3
07		SCREW	M8x8L	1
08		HANDLE WHEEL		1
09	C13-5008	NUT		1
10	C13-5007	INDEX RING		1
11		SCREW	M6x12L	1
12		BEARING	51103	1
13	C13-5006	BRACKET		1
14	C13-5003	LEAD SCREW		1
15		BEARING	51103	1
16	C13-5005	GEAR		1
17	C13-5002	CROSS SLIDE		1
18		SCREW	M6x30L	3
19	C13-5004	NUT		1
20	C13-5023	GIB		1
21		SCREW	M6x25L	1
22	C13-5001	CARRIAGE		1
23		BEARING	6202,Z	1
24		O-RING	G30	1
25	C13-5010	SHAFT		1
26	C13-5011	GEAR		1

Property of Kent USA
Please Do Not Reproduce

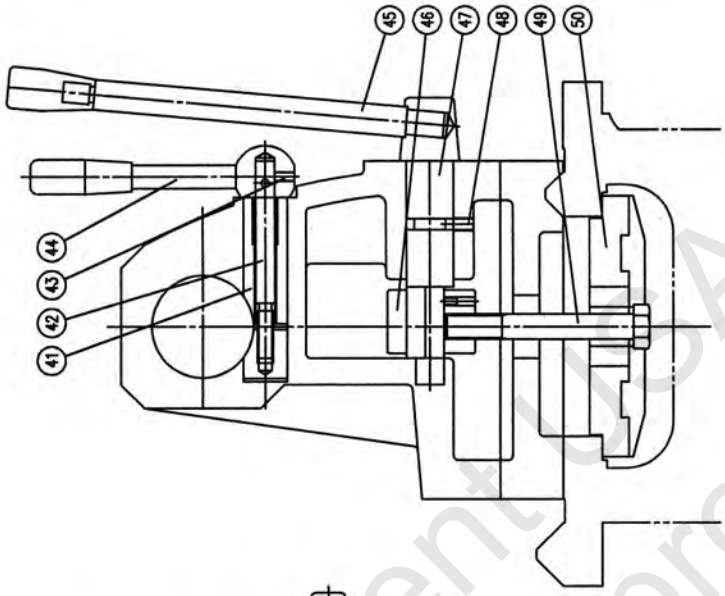

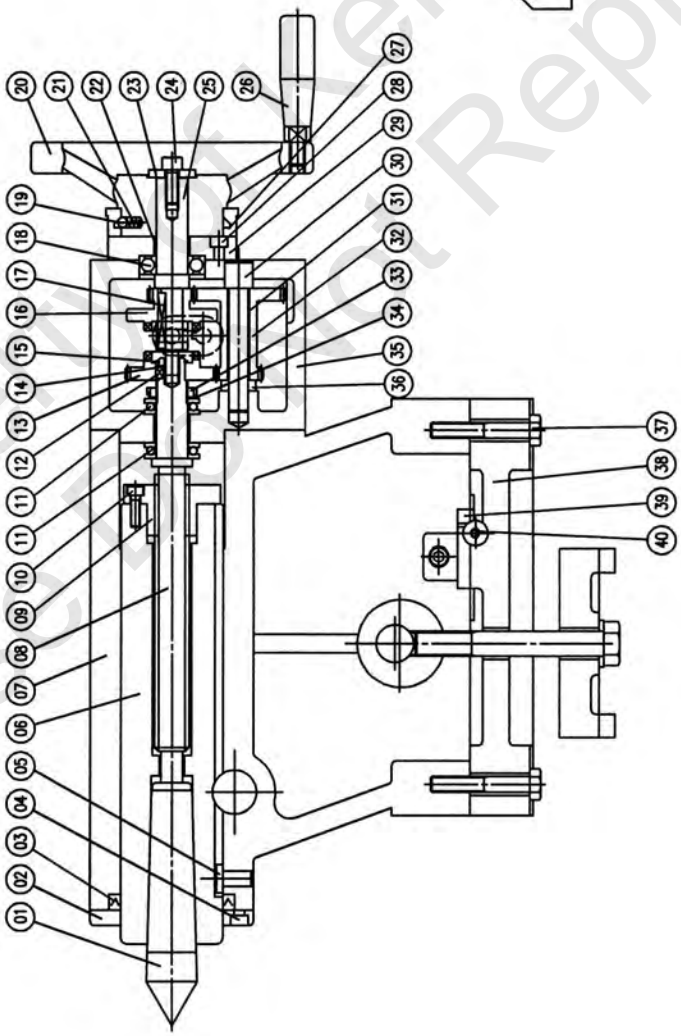

Property of Rent USA
Please Do Not Reproduce

零 件 表 PARTS LIST				
REF NO.	件 號 PART NO.	零 件 名 稱 DESCRIPTION	規 格 PARTS NAME	數 量 Q'TY
27		SNAP RING	STW12	2
28	C13-5013	PLATE		2
29		SCREW	M8x30L	4
30	C13-5012	GIB		1
31	C13-5021	WIPER		2
32	C13-5022	WIPER		2
33	C13-5015	GIB		1
34		SCREW	M8x30L	4
35	C13-5014	PLATE		1
36	C13-5018	BRACKET		1

Property of Kent USA
Please Do Not Reproduce

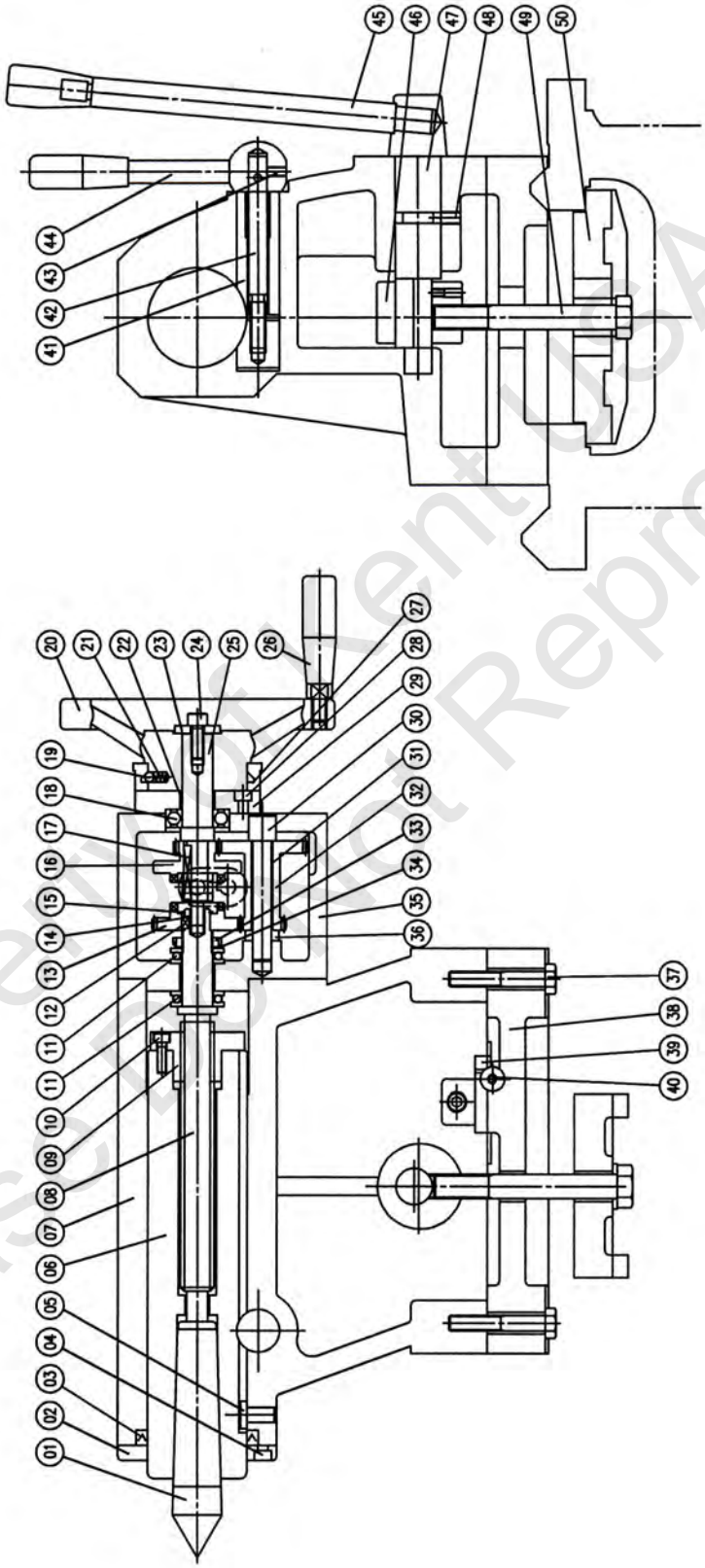

Property of Kent USA
Please Do Not Reproduce

零件表 PARTS LIST				
REF NO.	件號 PART NO.	零件名稱 DESCRIPTION	規格 PARTS NAME	數量 Q'TY
01		CENTER	#4	1
02	C13-6006	COVER		1
03		OIL SEAL		1
04		SCREW	M6x15L	4
05	C13-6007	KEY		1
06	C13-6003	BARREL		1
07	C13-6001	CASTING		1
08	C13-6004	LEAD SCREW		1
09	C13-6005	NUT		1
10		SCREW	M6x15L	3
11		BEARING	51104	2
12		KEY	5x5x8L	1
13	C13-6023	GEAR		1
14		BUSHER	70B-0812	1
15		SNAP RING	STW17	1
16	C13-6024	GEAR		1
17		KEY	5x5x35L	1
18		BEARING	6004	1
19		STEEL BALL	ϕ1/4"	3
20	C13-6029	HANDLE WHEEL		1
21		SPRING		3
22		BUSHER	70B-2012	1
23	C13-6030	WASHER		1
24		SCREW	M18x20L	1
25	C13-6026	SHAFT		1
26		HANDLE		1

Property of Kent USA
Please Do Not Reproduce

零 件 表 PARTS LIST				
REF NO.	件 號 PART NO.	零 件 名 稱 DESCRIPTION	規 格 PARTS NAME	數 量 Q'TY
27		INDEX RING		1
28		SCREW	M6x15L	3
29	C13-6027	BRACKET		1
30	C13-6031	SHAFT		1
31		BUSHER	70B-1215	2
32	C13-6025	GEAR		1
33		NUT	AN04	1
34		WASHER	AN04	1
35	C13-6021	GEAR BOX		1
36	C13-6032	COLLAR		1
37		SCREW	M10x50L	2
38	C13-6002	BASE		1
39	C13-6017	GIB		1
40		SCREW		2
41	C13-6010	BUSHER & NUT		1
42	C13-6009	SCREW		1
43		SCREW	M6x10L	1
44	C13-6008	HANDLE		1
45	C13-6011	HANDLE		1
46	C13-6014	CAM		1
47	C13-6012	CAM SHAFT		1
48	C13-6013	SCREW		1
49	C13-6015	BOLT		1
50	C13-6016	CLAMP PLATE		1

Property of Kent USA
Please Do Not Reproduce

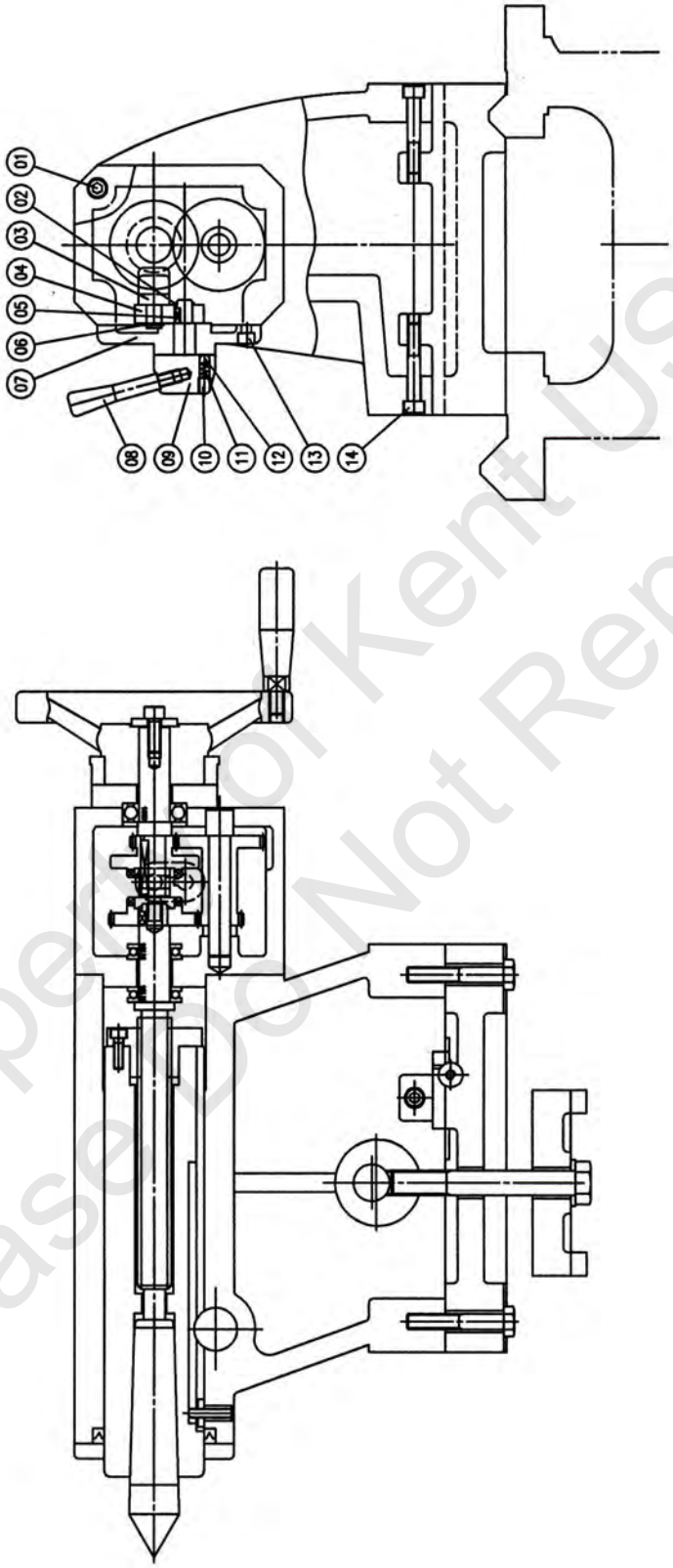

Property of Kent USA
Please Do Not Reproduce

零 件 表 PARTS LIST				
REF NO.	件 號 PART NO.	零 件 名 稱 DESCRIPTION	規 格 PARTS NAME	數 量 Q'TY
01		SCREW	M8x120L	4
02		SNAP RING	STW10	1
03	C13-6035	FORK		1
04	C13-6034	LEVER		1
05		KEY	4x4x10L	1
06		SNAP RING	STW10	1
07	C13-6022	COVER		1
08		HANDLE		1
09	C13-6020	HANDLE BOSS		1
10		SCREW	M8x10L	1
11		SPRING		1
12		STEEL BALL	ϕ1/4"	1
13		SCREW	M6x15L	4
14		SCREW	M8x50L	2

Property of Kent USA
Please Do Not Reproduce

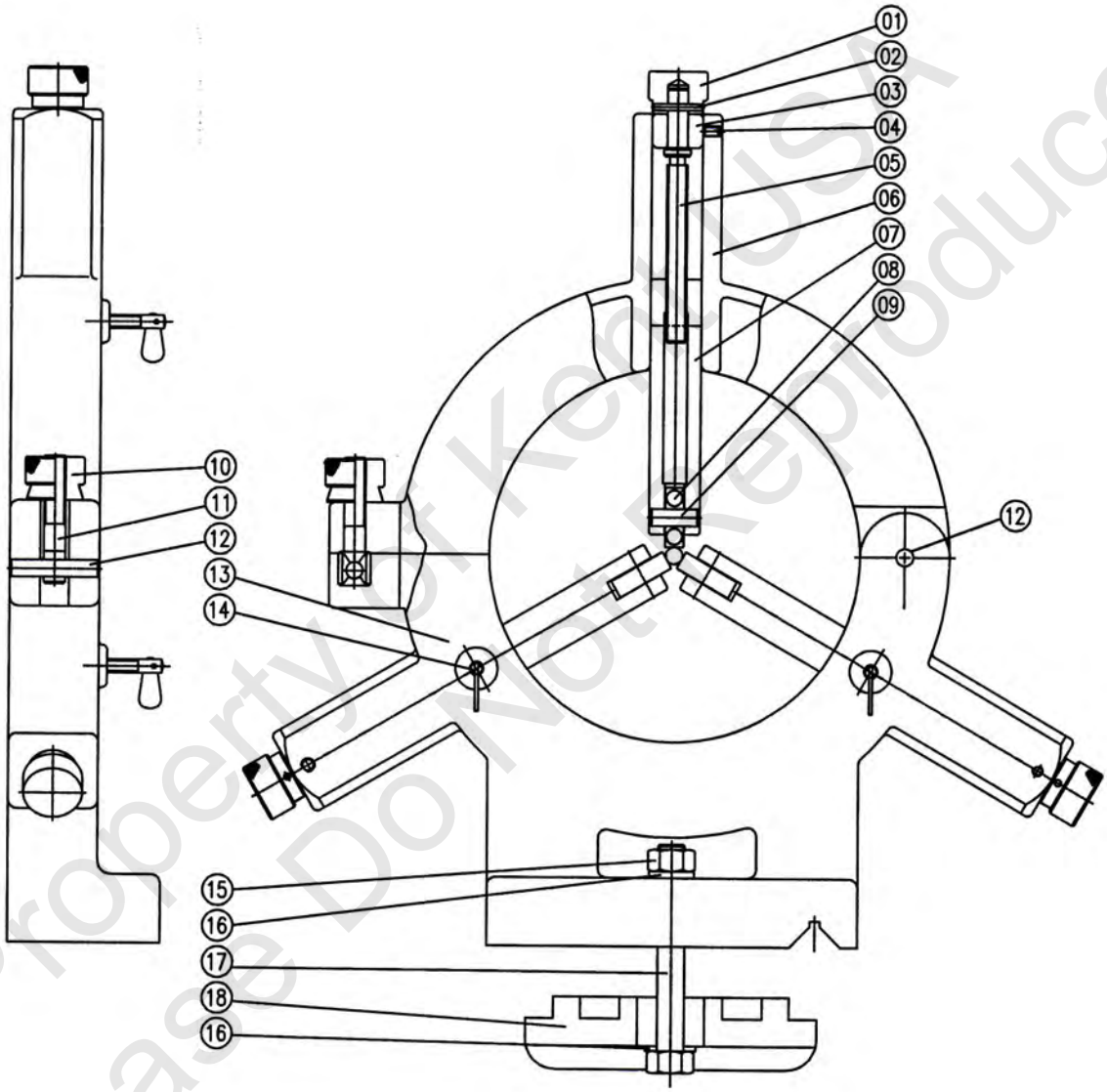

Property of Keen USA
Please Do Not Reproduce

PARTS LIST				
REF NO.	PART NO.	DESCRIPTION	PARTS NAME	Q'TY
01	C13-7003	HANDLE		3
02		PIN	φ4x30L	3
03	C13-7005	WASHER		3
04		SET SCREW	M8xP1.25x10L	3
05	C13-7006	LEAD SCREW		3
06	C13-7001	CASTING		1
07	C13-7004	SHAFT		3
08		BEARING	16100,2Z	3
09	C13-7010	PIN		3
10	C13-7007	NUT		1
11	C13-7008	BOLT		1
12	C13-7009	PIN		2
13	C13-7002	CASTING		1
14		SET SCREW	M8xP1.25x25L	3
15		NUT	M16	1
16		WASHER		2
17	C13-7015	BOLT	M16xP2.0x105L	1
18	C13-7016	LOCKING PLATE		1

Property of Kent USA
Please Do Not Reproduce

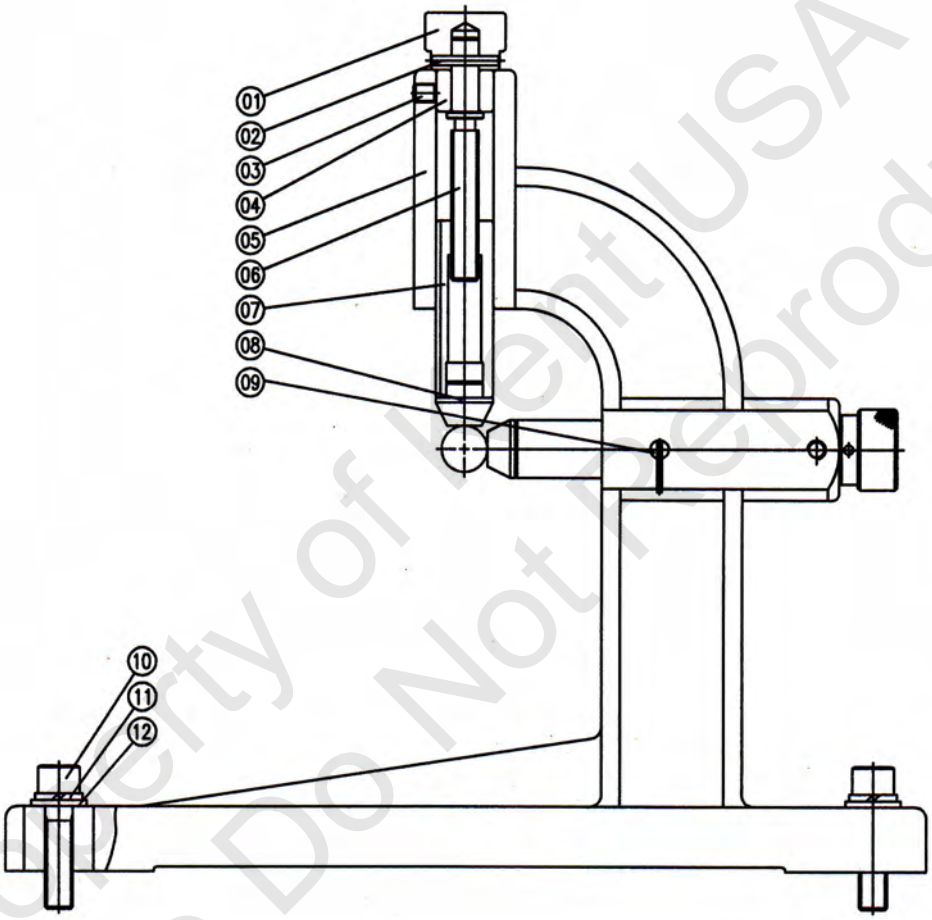

Property of KentUSA
Please Do Not Reproduce

PARTS LIST				
REF NO.	PART NO.	DESCRIPTION	PARTS NAME	Q'TY
01	C13-7003	HANDLE		2
02		PIN	ϕ4x30L	2
03		SET SCREW	M8xP1.25x8L	2
04	C13-7015	WASHER		2
05	C13-7011	CSATION		1
06	C13-7014	LEAD SCREW		2
07	C13-7013	SHAFT		2
08	C13-7012	BUSH		2
09		SET SCREW	M8xP1.25x25L	2
10		SCREW	M12xP1.75x50L	2
11		WASHER	ϕ12	2
12		WASHER	ϕ12	2

Property of Kent USA
Please Do Not Reproduce