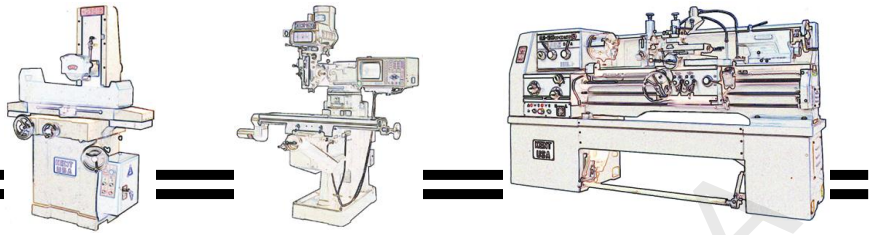

Operation Manual

HL Series

LATHE

KENT INDUSTRIAL (USA) INC.

1231 Edinger Ave., Tustin, CA 92780

Tel: (714) 258-8526
Fax: (714) 258-8530
Internet: WWW.KENTUSA.COM

KENT USA…THE WAY TO AFFORDABLE EXCELLENCE…

TABLE OF CONTENT

SPECIFICATIONS

UNIT: mm / inch

MODEL		HL-960 (37”)	HL-1120 (44”)	HL-1600 (63”)
		2000 (80”),3000 (120”),4000 (160”), 5000(200”),6000 (240”),7000 (280”), 8000 (320”)		
CAPACITY	Swing over bed	960(37.8”)	1120(44”)	1600(63”)
	Swing over cross slide	650(25.6”)	810(32”)	1290(50.79”)
	Distance between centers	2000 (78.7”),3000 (118”),4000 (157.5”), 5000 (196.8”),6000 (236”),7000 (275.6”), 8000 (315”)		
BED	Swing over gap	1390(54.7”)	1550(61”)	2030(80”)
	Width of bed	610 (24”)		
	Width of gap	245 (9.65”)		
	Length of bed	3860 (152”),4800 (189”),5800 (228”) 6800 (267.7”),7800 (307”),8800 (346.5”) 9800 (385.8”)		
HEADSTOCK	Spindle bore diameter	152 (6”)		
	Numbered of spindle speeds	16 steps		
	Range of spindle speeds	4, 5.5, 7, 10, 14, 19, 26, 35, 48, 65, 90, 120, 165, 225, 310, 420 rpm		
	Spindle nose	ASA A2-11		
CARRIAGE	Width of carriage	800 (31.5”)		
	Cross slide travel	600 (23.6”)		
	Top slide travel (Compound rest travel)	370 (14.57”)		
	Max. tool shank size	40 x 40 (1.57”x 1.57”)		
TAILSTOCK	Diameter of barrel	115 (4.53”)		
	Travel of barrel	305 (12”)		
	Taper of barrel	M.T.#6		
THREADS	Lead screw diameter & pitch	Dia.60mm,Pitch:12mm/Dia.1”X2T.P.I.		
	Range of metric pitches	1-120 (62 Nos)		
	Range of inch pitches	0.25-30T.P.I. (70Nos)		
	Diametrical pitches	1-120DP (70Nos)		
	Range of module pitches	0.25-30MP (53Nos)		
FEEDS	Feed rod diameter	32 (1.26”)		
	Range of longitudinal feeds	0.06-7.04 (0.0024”-0.28”)		
	Range of cross feeds	0.03-3.52 (0.0012”-0.14”)		
MOTOR	Main spindle motor	15 Kw (20 HP)		
	Coolant pump motor	0.1 Kw (1/8 HP)		

GENERAL LAYOUT

1. END GEAR TRAIN
2. HEADSTOCK
3. GEAR BOX
4. ELECTRIC CONTROL
5. CENTER
6. FEED ROD
7. GAP BLOCK
8. LEADSCREW
9. APRON
10. TOP-SLIDE
11. SADDLE AND CROSS-SLIDE
12. ELECTRIC CONTROL
13. SLIDING SUPPORT BRACKET
14. BED
15. TAILSTOCK
16. HIGH/LOW SPEED GEAR BOX

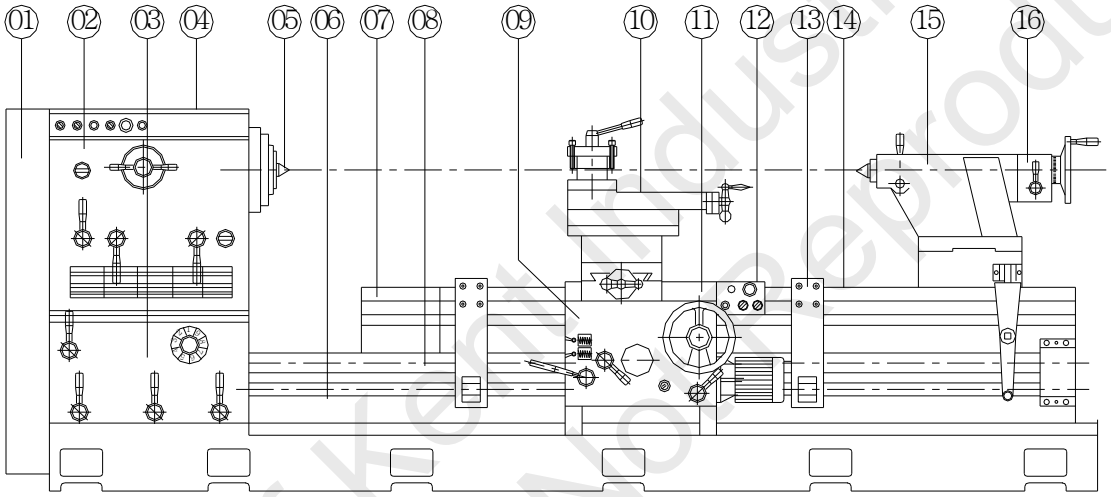

MACHINE OPERATION

Power Source Wiring

- The electrical cabinet is located at the rear of the headstock; incoming 3 phase power should be connected to the R, S, T terminals located inside the electrical cabinet toward the lower right hand corner.
- A power source with a minimum breaker of 75 Amps is recommended for the standard 20 H.P. spindle motor machine (100 Amps for 25 H.P. option machines). The ground wire must be properly grounded too.
- After hooking up power, flip the power on switch (SA1) located at the top of the headstock; the power indicator light (WL) located to the left should now be lit. Next release the emergency red mushroom pushbuttons on both the headstock (SB1) and the carriage (SB2). Then flip the forward/neutral/reverse selector switch (SA3) on the carriage to the forward position. Now verify that the spindle is rotating in the forward direction by pushing on the jog button switch (SB3) located at the top of the headstock. If the spindle rotates forward toward the operator, then the rotation is normal. If the spindle rotates to the opposite direction, you should then cut off the main breaker power supply to the machine and swap the position of any two of the three electric wires connected to the R, S, T terminals.

Preparations and Checks before Operation

- Check to make sure oil sight gauges are half full and that the automatic lubrication unit located at the rear of the headstock is filled with oil.
- Make sure all the levers and handles are in good condition and that all spindle speed and feed selection levers are positioned properly.
- Check the V-belt tension of headstock motor; a deflection of about 1” at the mid point is ideal.
- Double check for interference of the chuck and work piece to the cross slide, toolpost, bedways, etc. before starting up the machine.

MAINTENANCE

Keys to Smooth Operation

- To insure the machine can maintain accuracy over time under normal conditions of use, always verify that the oil level is half full on all the oil sight gauges of the oil reservoirs and to top off as needed before starting the machine. Also, make sure to manually oil between the saddle and the slide ways daily.
- Change out the lubrication oil in the headstock after the first 3 months run in period. Check yearly after this and change out if needed.
- Stop the machine immediately if the following occurs: headstock overheats, vibration, oil leakage or no oil. Remedy as soon as possible.
- Do not use hammer or other tools to pound on the work piece; damage to the spindle could result.
- Take care not to drop tools or other heavy objects onto the slide ways.
- Do not adjust or operate this machine until completely familiarize with all functions.
- Implement routine cleaning and periodic maintenance procedures to maximize the useful life and accuracy of this machine. Always clean the machine, remove chips, and apply oil on all the sliding surfaces and turn off the power source to the machine after work every day.

UNPACKING AND UNLOADING

- Each machine is shipped fully assembled except for optional accessories such as taper turning attachment, etc.
- Unloading of the machine from the wooden case or skid should be made by steel cables or straps of appropriate rating as shown in figure below. Make sure to locate the center of gravity of the lathe or use counter balancing straps.
- Raising and lowering of the lathe should be done carefully, especially when lowering the lathe. Take extra care not to bump it against the floor as it can potentially twist the bed ways and affect accuracy. Pay close attention and maintain visual contact with all personnels involved with the machine transport to ensure their safety.

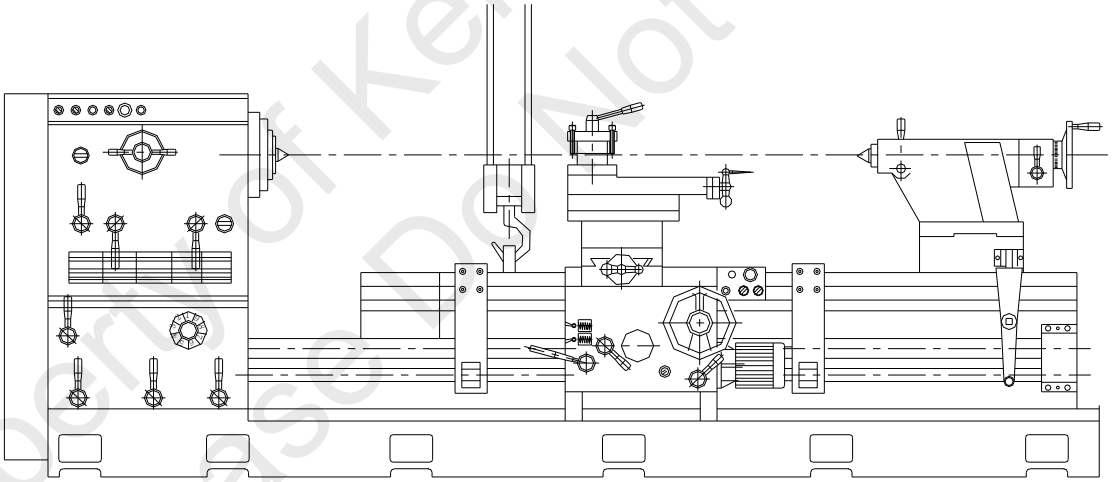

SPINDLE SPEED CONTROL

The 16-step spindle speeds are obtained by selecting the proper lever positions shown on the speed name plate. Pulse the spindle jog button located near the top of the headstock during spindle speed changes if the levers are getting stuck because of interfering gear positions.

Warning! Do not move or change speed-selector controls while the spindle is running.

1. End Gears Output
2. Forward/Reverse Lever
3. Electric Control Panel
4. 8-Step Lever
5. Speed Name Plate
6. High/Low Lever

GL: Green Lamp – Coolant on indicator
SA2: Coolant on/off switch
WL: White Lamp – Main power on indicator
SA1: Main power on/off switch
SB1: Emergency cut off push button
SB3: Spindle jog push button

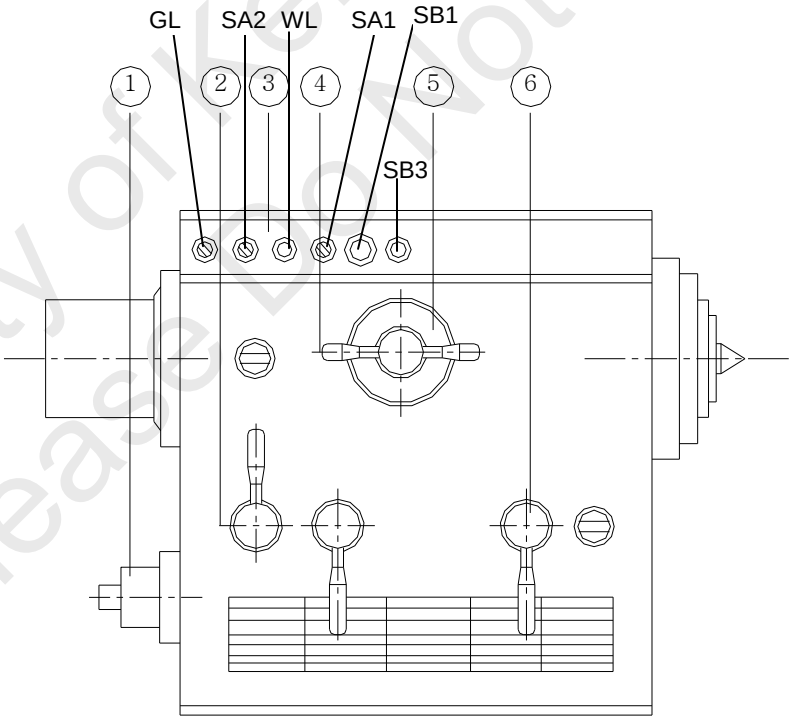

THEADS AND FEEDS: (GEARBOX OPERATION)

All the threads and feeds that the change gearbox is capable of outputting are shown on the data chart fitted on the front of gearbox; it also shows the exact positioning of the control levers (see figure below.) When cutting DP/MP threads, please set NO-5 change lever to “DP/MP” position and also set No. 3 change lever to “IN” or “MM” position (DP=IN, MP=MM).

1. A, B-Step Change Lever
2. C, D, E-Step Change Lever
3. IN, MM-Step Change Lever
4. 10-Step Change Lever
5. Threading IN/MM or DP/MP or Auto Feed Mode Selector Lever

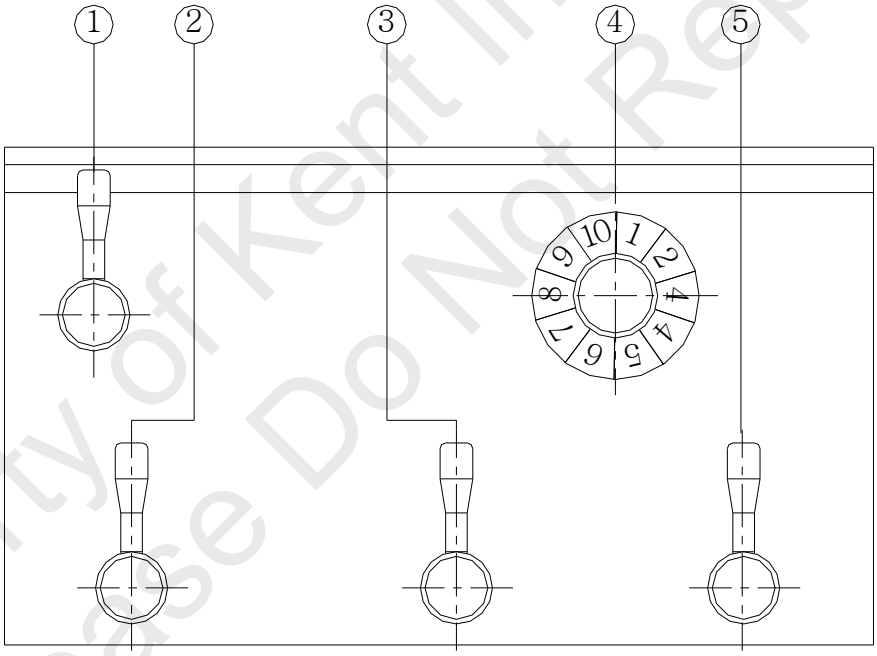

Thread Cutting Index

		IN										DP									
		1	2	3	4	5	6	7	8	9	10	1	2	3	4	5	6	7	8	9	10
I	AC	16	18	19	20	22	23	24	26	28	30	64	72	76	80	88	92	96	104	112	120
	AD	8	9	19	10	22	23	12	13	14	15	32	36	38	40	44	46	48	52	56	60
	AE	4	4½"	4¾"	5	5½"	5¾"	6	6½"	7	7½"	16	18	19	20	22	23	24	26	28	30
	BD	2	2¼"	2⅜"	2½"	2¾"	2⅞"	3	3¼"	3½"	3¾"	8	9	9½"	10	11	11½"	12	13	14	15
	BE	1	1⅛"	1 3/16"	1¼"	1⅜"	1 7/16"	1½"	1⅝"	1¾"	1⅞"	4	4½"	4¾"	5	5½"	5¾"	6	6½"	7	7½"
II	BD	½"	9/16"	19/32"	⅝"	11/16"	23/32"	¾"	13/16"	⅞"	15/16"	2	2¼"	2⅜"	2½"	2¾"	2⅞"	3	3¼"	3½"	3¾"
	BE	¼"	9/32"	19/64"	5/16"	11/32"	23/64"	⅜"	13/32"	7/16"	15/32"	1	1⅛"	1 3/16"	1¼"	1⅜"	1 7/16"	1½"	1⅝"	1¾"	1⅞"

MM										MP									
1	2	3	4	5	6	7	8	9	10	1	2	3	4	5	6	7	8	9	10
1			1.25			1.5		1.75		0.25						0.375			
2	2.25		2.5	2.75		3	3.25	3.5	3.75	0.5			0.625			0.75		0.875	
4	4.5	4.75	5	5.5	5.75	6	6.5	7	7.5	1	1.125		1.25	1.375		1.5	1.625	1.75	
8	9	9.5	10	11	11.5	12	13	14	15	2	2.25	2.375	2.5	2.75	2.875	3	3.25	3.5	3.75
16	18	19	20	22	23	24	26	28	30	4	4.5	4.75	5	5.5	5.75	6	6.5	7	7.5
32	36	38	40	44	46	48	52	56	60	8	9	9.5	10	11	11.5	12	13	14	15
64	72	76	80	88	92	96	104	112	120	16	18	19	20	22	23	24	26	28	30

IN									
1	2	3	4	5	6	7	8	9	10
0.11	0.10	0.095	0.09	0.082	0.078	0.075	0.07	0.065	0.06
0.22	0.20	0.19	0.18	0.164	0.156	0.15	0.14	0.13	0.12
0.44	0.40	0.38	0.36	0.328	0.312	0.30	0.28	0.26	0.24
0.88	0.80	0.76	0.72	0.656	0.624	0.6	0.56	0.52	0.48
1.76	1.60	1.52	1.44	1.312	1.248	1.2	1.12	1.04	0.96
3.52	9/16	3.04	2.88	2.624	2.496	2.4	2.24	2.08	1.92
704	9/32	6.08	5.76	5.248	4.992	4.8	4.48	4.16	3.84

Just For Information

MM/REV.		1	2	3	4	5	6	7	8	9	10
		: 1						: 1/2			
I	AC	0.110	0.100	0.095	0.090	0.082	0.078	0.075	0.070	0.065	0.060
	AD	0.220	0.200	0.190	0.180	0.164	0.156	0.150	0.140	0.130	0.120
	AE	0.440	0.400	0.380	0.360	0.328	0.312	0.300	0.280	0.260	0.240
	BC	0.440	0.400	0.380	0.360	0.328	0.312	0.300	0.280	0.260	0.240
	BD	0.880	0.800	0.760	0.720	0.656	0.624	0.600	0.560	0.520	0.480
	BE	1.760	1.600	1.520	1.440	1.312	1.248	1.200	1.120	1.040	0.960
II	AC	0.440	0.400	0.380	0.360	0.328	0.312	0.300	0.280	0.260	0.240
	AD	0.880	0.800	0.760	0.720	0.656	0.624	0.600	0.560	0.520	0.480
	AE	1.760	1.600	1.520	1.440	1.312	1.248	1.200	1.120	1.040	0.960
	BC	1.760	1.600	1.520	1.440	1.312	1.248	1.200	1.120	1.040	0.960
	BD	3.520	3.200	3.040	2.880	2.624	2.496	2.400	2.240	2.080	1.920
	BE	7.040	6.400	6.080	5.760	5.248	4.992	4.800	4.480	4.160	3.840

FUNCTION OF GEAR BOX

The main function of the feed gear box is to allow for quick selection of different thread cutting capabilities and auto-feed rates.

Operation of Thread Cutting

First position all the feed gear change levers at proper positions based on the thread cutting chart. Then put the mode selector lever to “lead screw” position. Engage/disengage the half nut as needed based on the position of the thread chasing dial.

Operation of Automatic Feed

When using automatic feed, first rotate all the feed gear change levers to the proper positions according to the feed rate chart. Then put the mode selector lever to “feed” position.

Lubrication

The gear box is lubricated by oil bath lubrication and splash lubrication. When the machine is running, the oil will be splashed to all bearings and gears from the churning of the gears and driving shafts. We can check the oil quantity through the oil sight window and fill oil into oil inlet should the oil level ever goes below the red line.

Thread Chasing Dial

Thread chasing dial is installed on the left side of the APRON; it is used for cutting inch threads.

To cut threads of an even number per inch, close the half nut on any line as the dial passes the datum mark.

To cut threads of odd numbers per inch close the half nut on any long numbered mark on

the dial as it passes the datum mark.

Fractional threads of 1/2 or 3/4 T.P.I can be cut by closing the half nut at the same line on each pass of the tool.

This thread chasing dial cannot be used with an inch lead screw to cut metric threads, D. P., module pitches. To cut metric threads, the half nut of the APRON must be always engaged during the thread cutting process. You can only reposition the cutting tool by using the spindle forward/reverse selection switch in the APRON to move the carriage back. The reverse rotation of the lead screw with the half nut engaged will move the carriage back to the starting position.

SADDLE AND APRON CONTROL

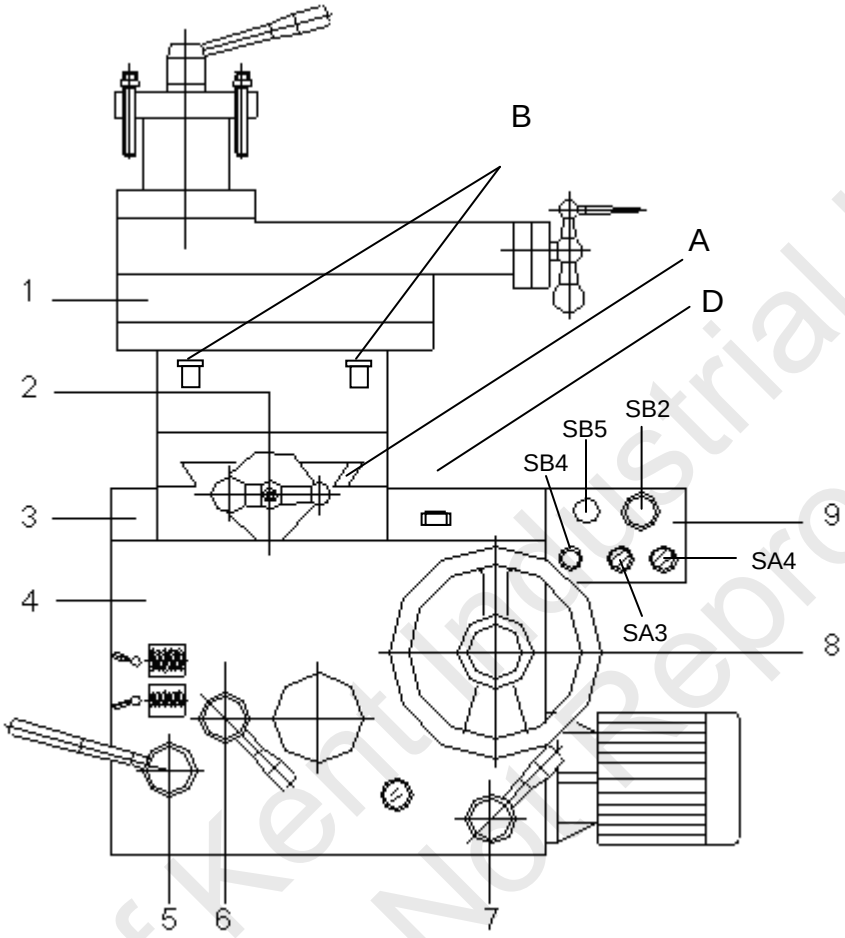

1. Four way Toolpost and Top-Slide
2. Cross-Slide Hand-wheel
3. Saddle Casting
4. APRON Casting
5. Half nut engagement lever (press downward to engage.)
6. Longitudinal feed or crossfeed selector lever (move up for cross feed and down for longitudinal feed.)
7. Clutch engagement for rapid motor (moved up for auto-feed and down for rapid motor feed.)
8. Longitudinal feed hand wheel.
9. Carriage mount electric control panel.

SA3: Forward/neutral/reverse selector switch
SA4: Rapid left/off/right selector switch
SB2: Emergency cut off push button
SB4: Spindle jog push button
SB5: Push button to start spindle

Facing Cut

When taking a heavy facing cut, in order to minimize the backward deflection of the carriage, lock down on bolt “D” on the carriage. Fastening it tightly can increase the stability of the carriage to ensure that the facing cut is accurate.

Cutting of Tapered Plane

There are many graduated divisions on the slide plate of carriage. For cutting tapered plane, just loosen the locking screw “B” first and then rotate the compound rest according to the required angle. After the adjustment, fasten the locking screw “B” again. The cutting of tapered plane can then be processed.

Over the life of the machine, as the cross slide is moved back and forth over the saddle, wear and tear will create slop in the ways. In order to eliminate the excess play, the tapered gib should be adjusted. It can be easily adjusted by first loosening the counter locking set screw at the end of the gib, then tightening the adjusting screw “A”. As the tapered gib is pushed forward, it will tighten the clearance between saddle and cross slide. Do not over-tighten as that will cause the crossfeed movement to be too tight. After adjustment, refasten the counter locking screw.

Graduation Dial (Micrometer Dial)

The graduation dials on the longitudinal feed and cross feed handle are divided into 200 divisions; each division means 0.05mm (0.002”),10mm (0.4”) per revolution. When resetting the zero position, please loosen locking set screw first. After the adjustment had finished, refasten the locking set screw again.

Lubrication of Carriage

The oiling inlets are installed on the carriage and cross slide. To ensure the longevity of the machine by minimizing wear, these oil inlets must be hand oiled regularly. An oiling gun is typically provided.

Transmission of Thread Cutting

Only with the automatic feed lever at the neutral position can the half nut control lever be engaged in the downward position. With the half nut engaged, then the carriage will move leftward or rightward to cut thread. To stop thread cutting pull up on the half nut lever to disengage the half-nut from the lead screw. The interlocking safety bar in the apron prevents the thread cutting and auto feed mechanism from being engaged simultaneously.

TAILSTOCK OPERATION

General Description of Tailstock

The main structure of tailstock consists of the tailstock body, base, mandrel, and the two speed change gear box. The mandrel of the tailstock and the spindle of headstock are aligned in the same central line. Depending on the length of the work pieces, or required position, the tailstock can be clamped at anywhere along the bed ways. It can then be used to support cutting work between two centers and or to bore a hole.

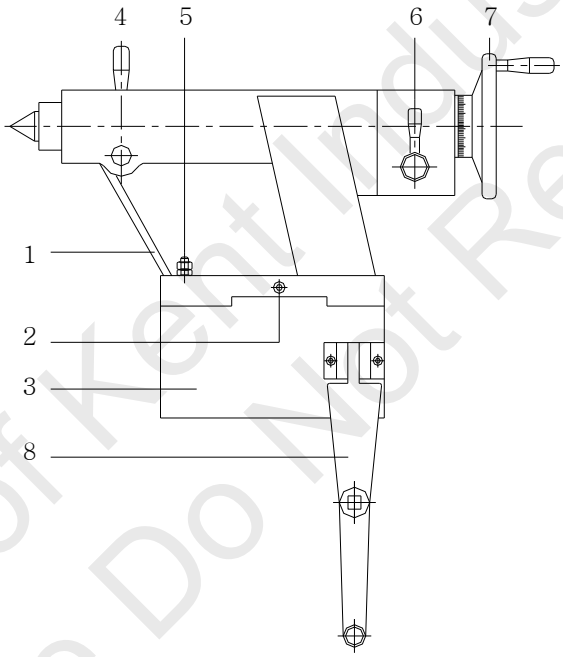

1. Tailstock Casting
2. Adjust Screw
3. Base Casting
4. Spindle Locking Lever
5. Base Clamping Lever
6. High/Low Speed Change Lever
7. Spindle for Backward Hand-wheel
8. Tailstock Sliding Block

Operational Method

When the tailstock mandrel and spindle center are not in the same central line, loosen and tighten the corresponding counter locking adjusting screws (#2 on Figure above) to get them in alignment. Use the same method to adjust and offset the tailstock from the central line to allow for taper cutting between two centers.

Lubrication of Tailstock

Tailstock is lubricated by oil bath lubrication system and its mandrel center and slide parts must be manually oiled from time to time.

ELECTRICAL CIRCUIT DIAGRAM

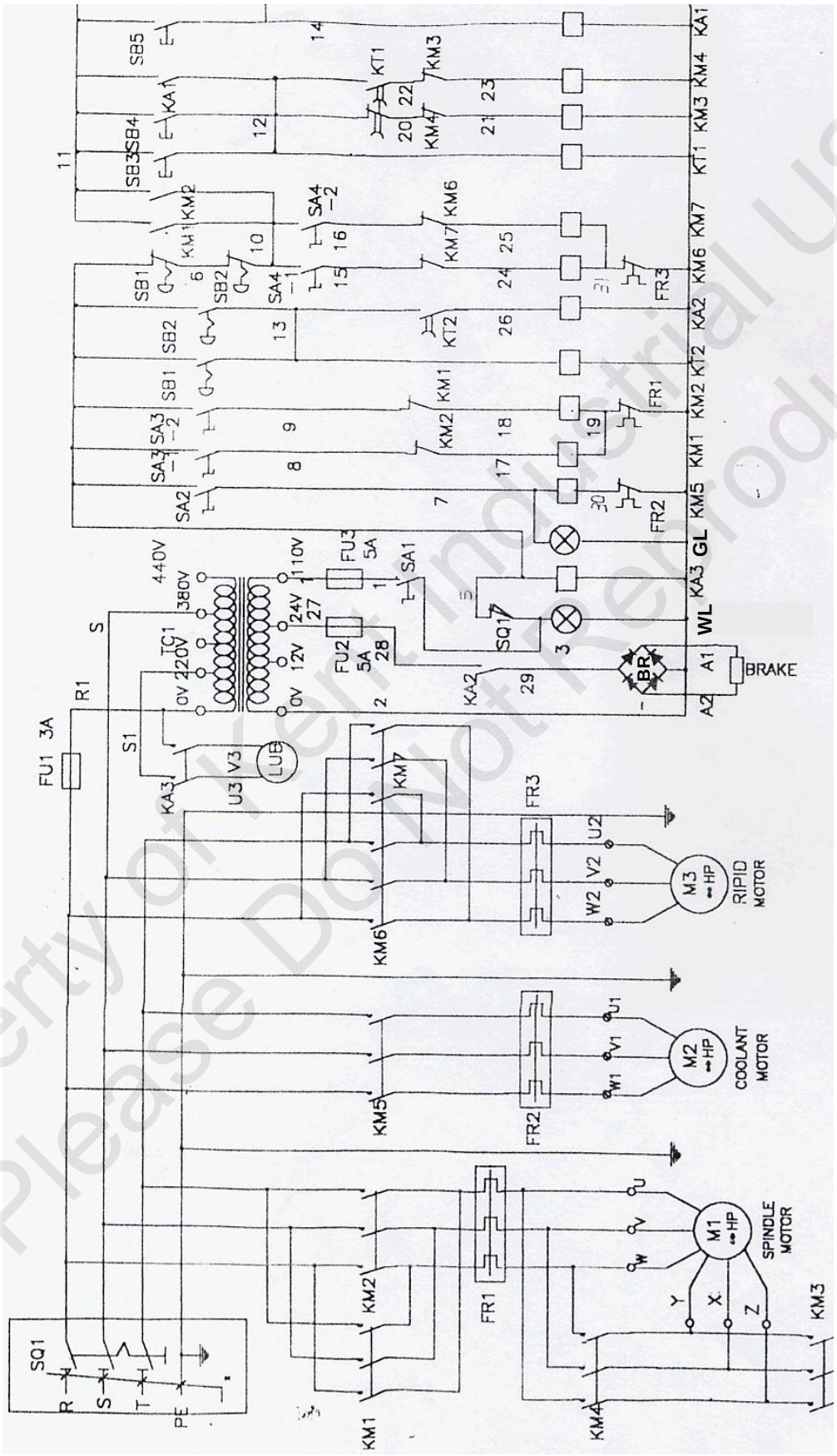

FU1	Input to control transformer fuse	3 Amps
FU2	24V control transformer output fuse	5 Amps
FU3	110V control transformer output fuse	5 Amps
SQ1	Side door cut off limit switch	Z-15GQ22-B plunger style limit switch
FR1	Spindle motor overload	RH50/55 (45 – 65 Amps)
FR2	Coolant motor overload	(0.5 – 0.7 Amp for 220V)
FR3	Rapid motor overload	(2.8 – 4.2 Amps)
KM1	Spindle forward contactor	CN50, 110V coil, 3A,2a,2b
KM2	Spindle reverse contactor	CN50, 110V coil, 3A,2a,2b
KM3	Auxiliary spindle start contactor	CN25, 110V coil, 3A,1a,1b
KM4	Auxiliary spindle run contactor	CN35, 110V coil, 3A,1a,1b
KM5	Coolant contactor	CN11, 110V coil, 3A,1a
KM6	Rapid motor forward contactor	CN11, 110V coil, 3A,1b
KM7	Rapid motor reverse contactor	CN11, 110V coil, 3A,1b
KA1	Main spindle start auxiliary contactor	CN11, 110V coil, 3A,1a
KA2	Brake on contactor	JCX-13F (MY2N) 5 Amp, 2P, 110V coil
KA3	Way lubrication pump contactor	JCX-13F (MY2N) 5 Amp, 2P, 110V coil
WL	White Lamp – main power on indicator	30ø, indicator lamp
GL	Green Lamp – coolant pump on indicator	30ø, indicator lamp
SA1	Main power on/off switch	30ø, 2 position switch, Red
SA2	Coolant on/off switch	30ø, 2 position switch, Green
SA3	Spindle forward/neutral/reverse selector switch	25ø, 3 position switch, Black
SA4	Rapid left/off/right selector switch	25ø, 3 position switch, Red
SB1	Emergency cut off push button 1	30ø, Mushroom push button, Red
SB2	Emergency cut off push button 2	25ø, Mushroom push button, Red
SB3	Spindle jog push button 1	30ø, Push button, Black
SB4	Spindle jog push button 2	25ø, Push button, Black
SB5	Main spindle start push button (lighted)	25ø, Above panel push button, Green lighted
KT1	Start to Run configuration delay timer	Star-Delta Timer, TRD-N, 110V coil, 0 – 30 seconds, 5 Amp contacts
KT2	Delay timer to activated brake	On delay timer, 110V coil, 0 – 10 seconds, 5 Amp contacts
BR	Bridge rectifier	KBPC2506, 250V, 60 Amp
TC1	Transformer	0V, 220V, 380V, 415V, 440V inputs 0V, 12V, 24V, 110V outputs 250VA
LUB	Auto lubrication pump	Ishaw (0-60 minute) variable interval auto lubrication pump, model YES/YESC, 220V motor, w/ buzzer

PART LIST

Headstock

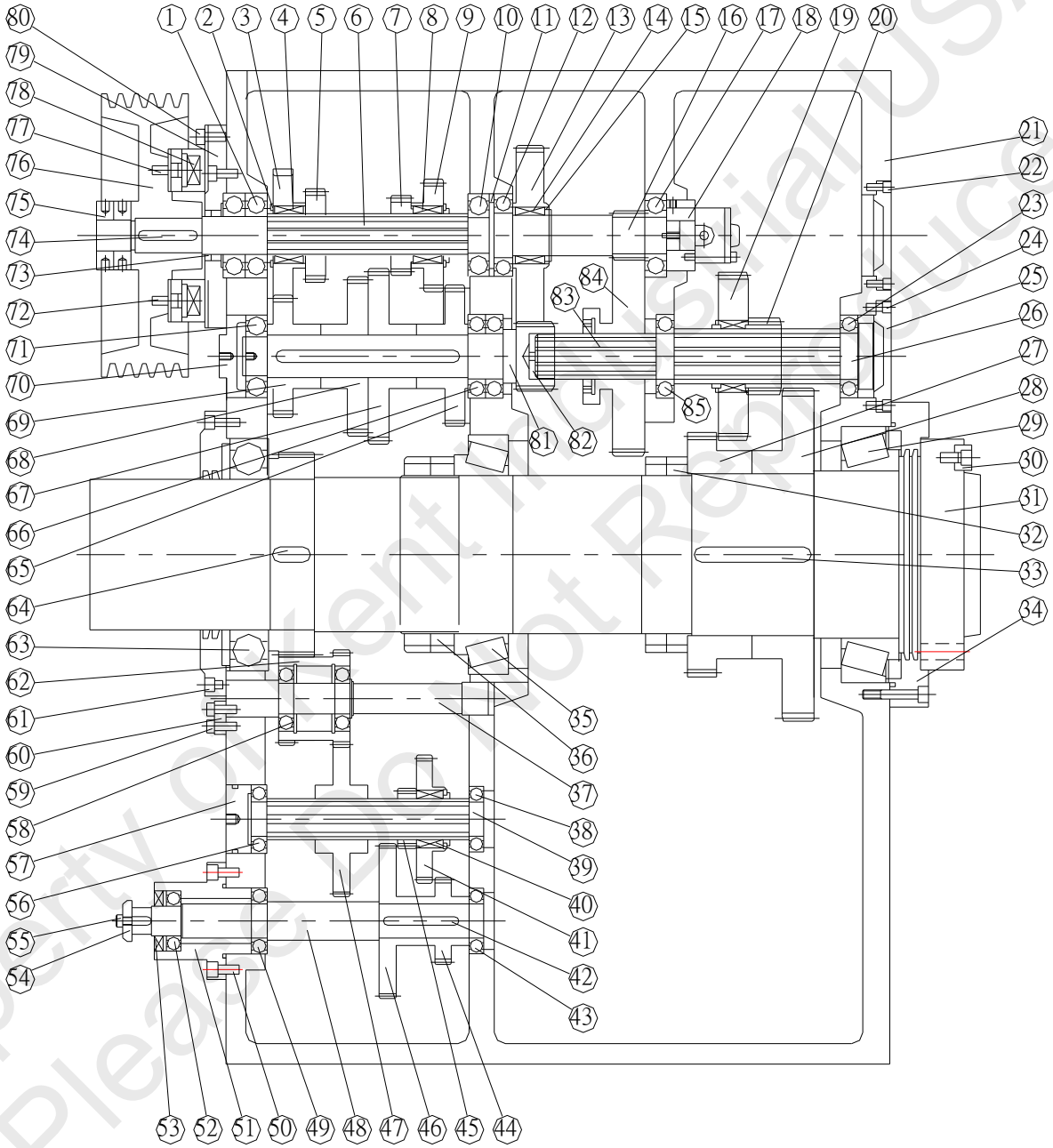

HEADSTOCK				
REF NO.	PART NO.	DESCRIPTION	PARTS NAME	Q'TY
0 1		BEARING	6309	2
0 2		SNAP RING	S65	1
0 3	HL- 2006	GEAR		1
0 4		KEY	10 x 8 x 35L	1
0 5	HL- 2005	GEAR		1
0 6	HL- 2004	SHAFT		1
0 7	HL- 2007	GEAR		1
0 8		KEY	10 x 8 x 35L	1
0 9	HL- 2008	GEAR		1
1 0		BEARING	6309	1
1 1	HL- 2009	COLLAR		1
1 2		BEARING	6211	1
1 3	HL- 2011	GEAR		1
1 4		KEY	10 x 8 x 35L	1
1 5		SNAP RING	S65	1
1 6	HL- 2010	HEAR SHAFT		1
1 7		BEARING	6309	1
1 8	HL- 2012	PUMP BASE		1
1 9	HL- 2026	GEAR		1
2 0	HL- 2025	GEAR		1
2 1	HL- 2001	BODY		1
2 2		SCREW	M8	3
2 3		BEARING	6211	1
2 4		SCREW	M8	3
2 5	HL- 2014	COVER		2
2 6	HL- 2023	SHAFT		1

HEADSTOCK				
REF NO.	PART NO.	DESCRIPTION	PARTS NAME	Q'TY
2 7	HL- 2030	GEAR		1
2 8	HL- 2029	GEAR		1
2 9		BEARING	32040x	1
3 0		DRIVING BOTTOM		1
3 1	HL- 2002	SHAFT		1
3 2	HL- 2031	NUT		2
3 3		KEY	18 x 12 x 140L	2
3 4	HL- 2034	COVER		1
3 5		BEARING	32038x	1
3 6	HL- 2032	NUT		2
3 7	HL- 2036	SHAFT		1
3 8		BEARING	6208	1
3 9	HL- 2039	SHAFT		1
4 0		KEY	10 x 8 x 30L	1
4 1	HL- 2042	GEAR		1
4 2		KEY	10 x 8 x 90L	1
4 3		BEARING	6208	1
4 4	HL- 2046	GEAR		1
4 5	HL- 2041	GEAR		1
4 6	HL- 2045	GEAR		1
4 7	HL- 2040	GEAR		1
4 8	HL- 2044	SHAFT		1
4 9		BEARING	6208	1
5 0		SCREW	M10	4
5 1	HL- 2047	COVER		1
5 2		BEARING	6207	1

HEADSTOCK				
REF NO.	PART NO.	DESCRIPTION	PARTS NAME	Q'TY
5 3		OIL SEAL	TC357210	1
5 4	HL- 3064	WASHER		1
5 5		SCREW	M8	1
5 6		BEARING	6208	1
5 7	HL- 2043	COVER		1
5 8		BEARING	6208	2
5 9		SCREW	M10	2
6 0	HL- 2038	PRESS BLOCK		1
6 1	HL- 2035	COVER		1
6 2	HL- 2037	GEAR		1
6 3		BEARING	6036	2
6 4		KEY	18 x 12 x 45L	1
6 5	HL- 2021	GEAR		2
6 6		BEARING	6211	1
6 7	HL- 2020	GEAR		1
6 8	HL- 2019	GEAR		1
6 9	HL- 2018	GEAR		1
7 0	HL- 2027	COVER		1
7 1		BEARING	6309	1
7 2		SCREW	M10	3
7 3		OIL SEAL	TC45608	1
7 4		KEY	10 x 8 x 70L	2
7 5	HL- 2016	NUT		2
7 6	HL- 2015	BELT PULLEY		1
7 7		SCREW	M10	
7 8		CLUTCH	TMB20	1

HEADSTOCK				
REF NO.	PART NO.	DESCRIPTION	PARTS NAME	Q'TY
7 9	HL- 2013	COVER		1
8 0		SCREW	M10	4
8 1	HL- 2017	GEAR SHAFT		1
8 2	HL- 2022	BLOCK		1
8 3	HL- 2023	SHAFT		1
8 4	HL- 2024	GEAR		1
8 5		BEARING	6211	1

Headstock

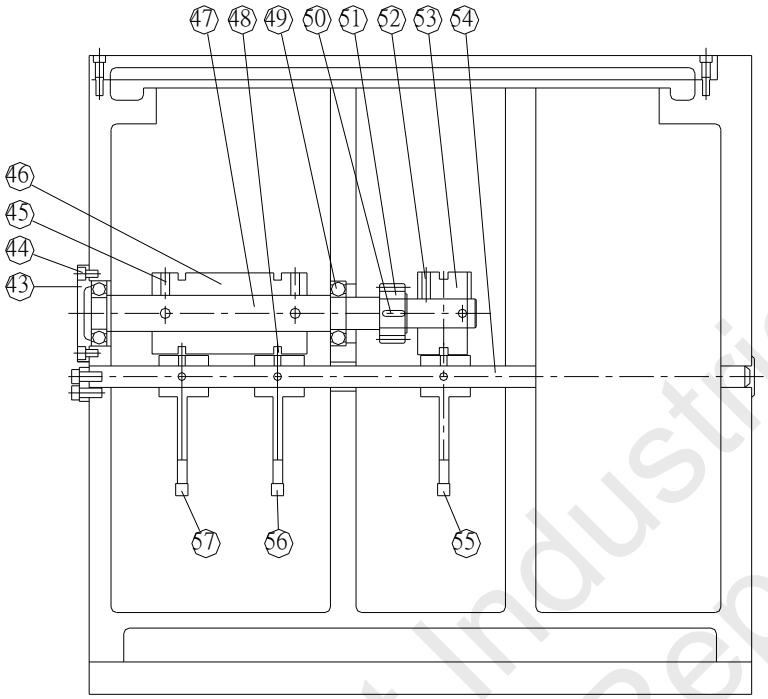

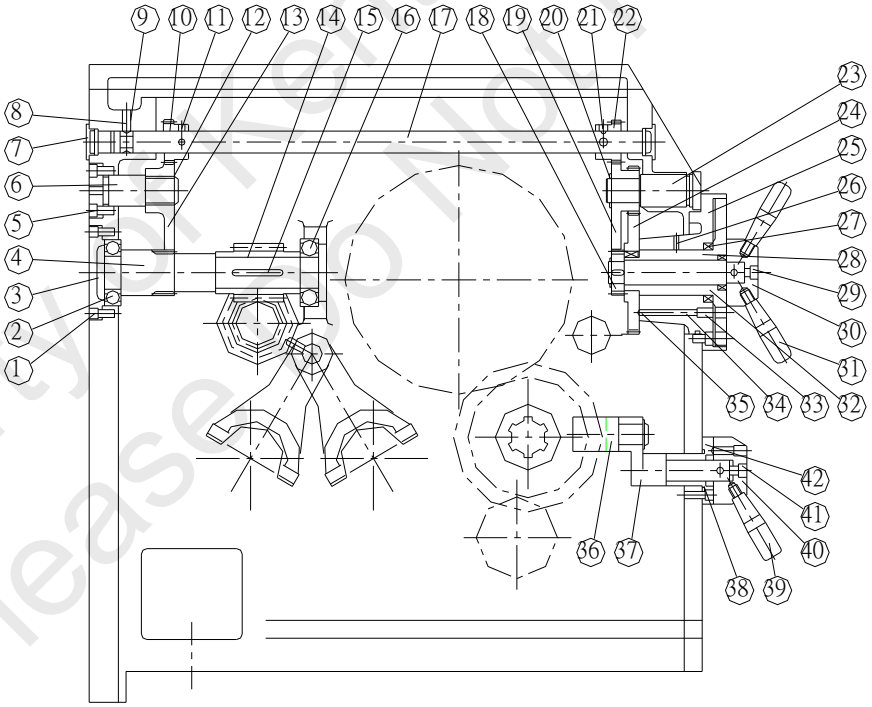

HEADSTOCK				
REF NO.	PART NO.	DESCRIPTION	PARTS NAME	Q'TY
0 1		SCREW	M8	3
0 2		BEARING	6208	1
0 3	HL- 2052	COVER		1
0 4	HL- 2063	GEAR SHAFT		1
0 5		SCREW	M8	3
0 6	HL- 2067	SHAFT		1
0 7		OIL COVER	ø32	3
0 8		SET SCREW	M10	1
0 9	HL- 2071	COLLAR		1
1 0	HL- 2070	GEAR		1
1 1		SET SCREW	M10	2
1 2		SNAP RING	S30	1
1 3	HL- 2068	GEAR		1
1 4	HL- 2064	STICK		1
1 5		KEY	6 x 6 x 60L	1
1 6		BEARING	6307	1
1 7	HL- 2069	SHAFT		1
1 8	HL- 2062	GEAR		1
1 9	HL- 2066	GEAR		1
2 0		SNAP SCREW	S30	1
2 1		SET SCREW	M10	2
2 2	HL- 2070	GEAR		1
2 3	HL- 2065	SHAFT		1
2 4	HL- 2061	GEAR		1
2 5	HL- 2058	NAME PLATE COVER		1
2 6		OIL CAP	M6	1

HEADSTOCK				
REF NO.	PART NO.	DESCRIPTION	PARTS NAME	Q'TY
2 7		OIL SEAL	TC-357010	1
2 8	HL- 2059	NAME PLATE COVER		1
2 9		SCREW	M8	1
3 0	HL- 2057	STEM ARM		1
3 1	HL- 2056	HANDLE		2
3 2	HL- 2060	SHAFT		1
3 3		SCREW	M10	1
3 4		SPRING	M8	1
3 5		BALL		1
3 6	HL- 2076	FORK		2
3 7	HL- 2075	FORK ARM		2
3 8		SCREW	M8	4
3 9	HL- 2056	HANDLE		2
4 0	HL- 2073	STEM ARM		2
4 1		SCREW	M8	2
4 2	HL- 2074	BUSHING		2
4 3	HL- 2052	COVER		1
4 4		SCREW	M8	3
4 5		SET SCREW	M10	4
4 6	HL- 2049	CAM		1
4 7	HL- 2048	SHAFT		1
4 8	HL- 2055	PIN		3
4 9		BEARING	6208	1
5 0		KEY	6 x 6 x 25L	1
5 1	HL- 2051	GEAR		1
5 2		SCREW	M10	1

HEADSTOCK				
REF NO.	PART NO.	DESCRIPTION	PARTS NAME	Q'TY
5 3	HL- 2050	CAM		1
5 4	HL- 2053	SHAFT		1
5 5	HL- 2054	FORK		1
5 6	HL- 2054	FORK		1
5 7	HL- 2054	FORK		1

Headstock

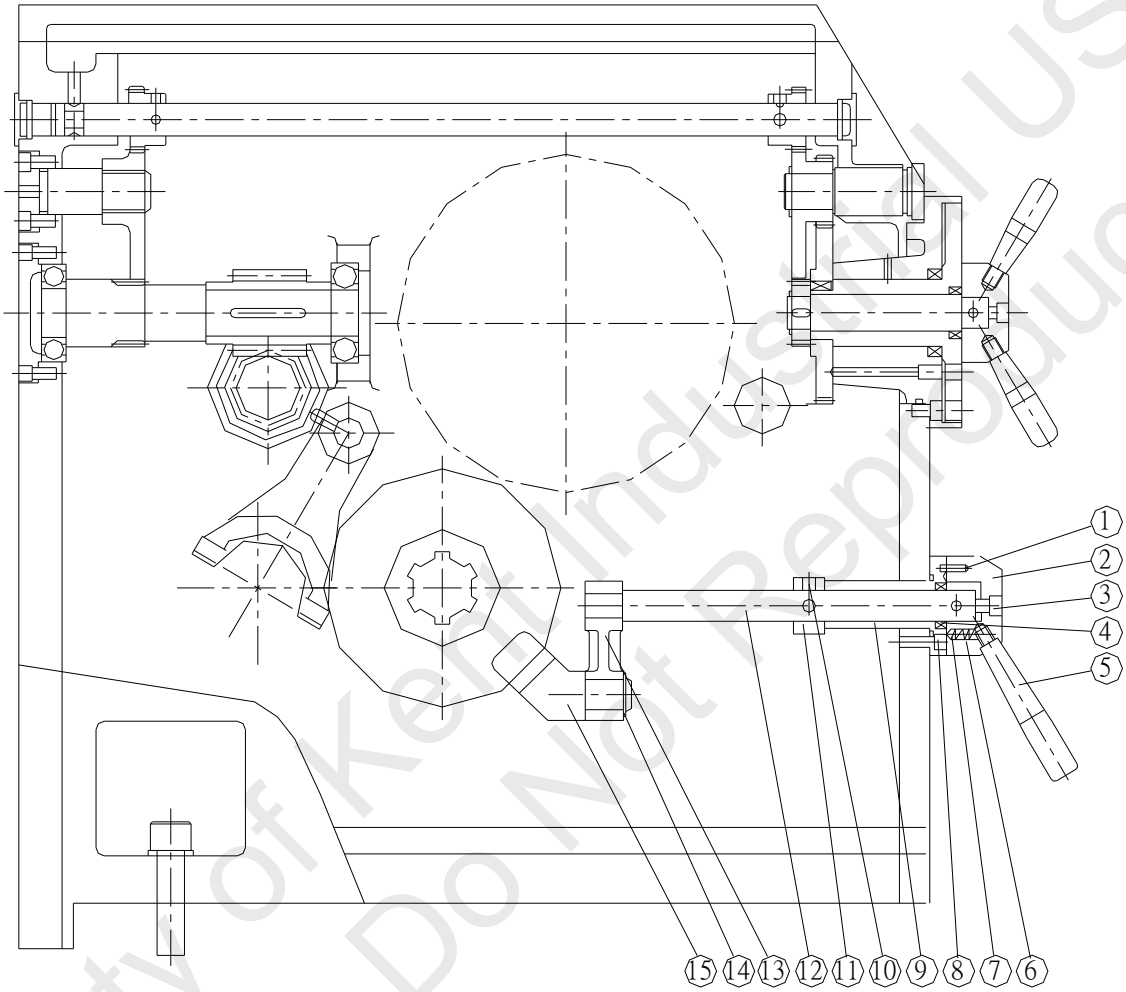

HEADSTOCK				
REF NO.	PART NO.	DESCRIPTION	PARTS NAME	Q'TY
0 1		PIN	ø5	1
0 2	HL- 2078	STEM ARM		1
0 3		SCREW	M8	1
0 4		OIL SEAL	TC- 30428	1
0 5	HL- 2077	HANDLE		1
0 6		SPRING	M8	1
0 7		BALL	ø8	1
0 8		SCREW	M8	2
0 9	HL- 2079	BUSHING		1
1 0		SCREW	M10	2
1 1	HL- 2081	SET RING		1
1 2	HL- 2080	SHAFT		1
1 3	HL- 2082	FORK ARM		1
1 4		SNAP RING	S25	1
1 5	HL- 2083	FORK		1

Bed

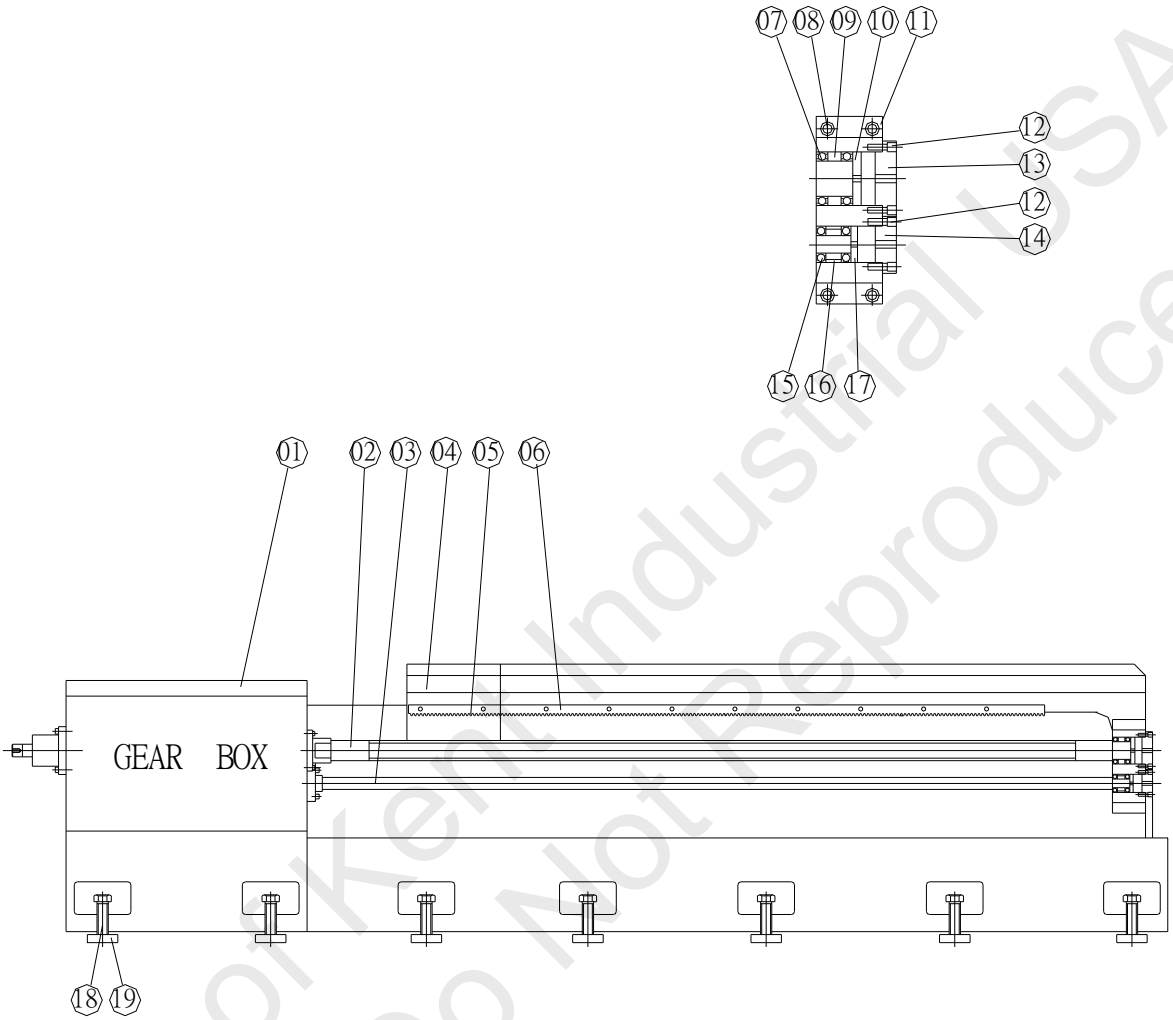

BED				
REF NO.	PART NO.	DESCRIPTION	PARTS NAME	Q'TY
0 1	HL- 1001	BED		1
0 2	HL- 1006	LEAD SCREW		1
0 3	HL- 1007	FEED ROD		1
0 4	HL- 1002	GAP PLATE		1
0 5	HL- 1003	PACK		1
0 6	HL- 1004	PACK		1~
0 7		BEARING	#6008	2
0 8		SCREW	M10	4
0 9	HL- 1009	COLLAR		1
1 0	HL- 1010	COLLAR		1
1 1	HL- 1008	BRACKET		1
1 2		SCREW	M8	6
1 3	HL- 1011	COVER		1
1 4	HL- 1014	COVER		1
1 5		BEARING	6005	1
1 6	HL- 1012	COLLAR		2
1 7	HL- 1013	COLLAR		1
1 8	HL- 1030	ADJUSTING BOLT		14~
1 9	HL- 1031	WASHER BLOCK		14~

Bed

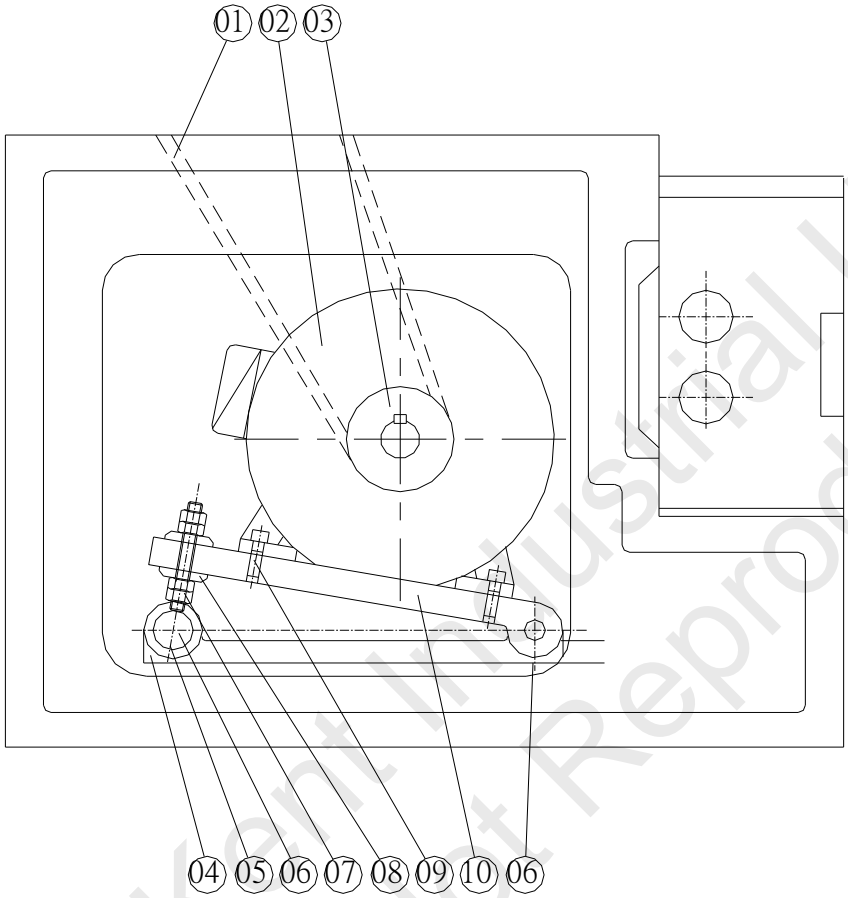

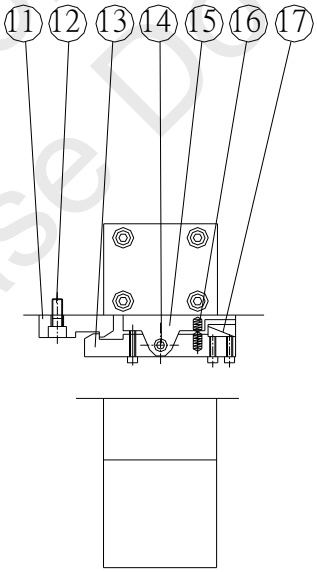

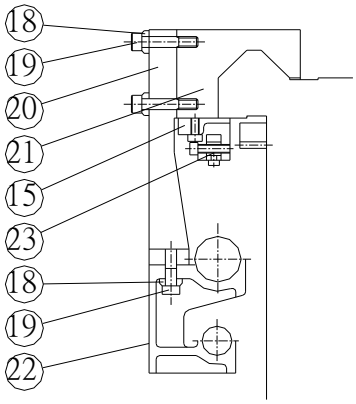

BED				
REF NO.	PART NO.	DESCRIPTION	PARTS NAME	Q'TY
0 1		V-BELT	B-	5
0 2		MOTER	20HP	1
0 3	HL- 1019	PULLEY		1
0 4	HL- 1016	LOW-PLATE		1
0 5	HL- 1018	BLOT		2
0 6	HL- 1017	SHAFT		2
0 7		NUT	M16	8
0 8		WASHER		4
0 9		SCREW		4
1 0	HL- 1015	MOTOR PLATE		1
1 1	HL-1019-1	CONNECTING ROD		2
1 2		SCREW	M8	2
1 3	HL-1025	CONNECTING ROD		2
1 4		SCREW	M8	2
1 5	HL-1023	LOCTING BED		2
1 6	HL- 1024	LOCTING BED		2
1 7		SPRING	M8	2
1 8	HL- 1027	PUSH BLOCK		2
1 9	HL- 1028	PUSH BLOCK		2
2 0	HL- 1029	WASHER		12
2 1		SCREW	M10	12
2 2	HL- 1021	BRACKET		2
2 3	HL- 1020	BRACKET		2
2 4	HL- 1022	BRACKET		2

Carriage

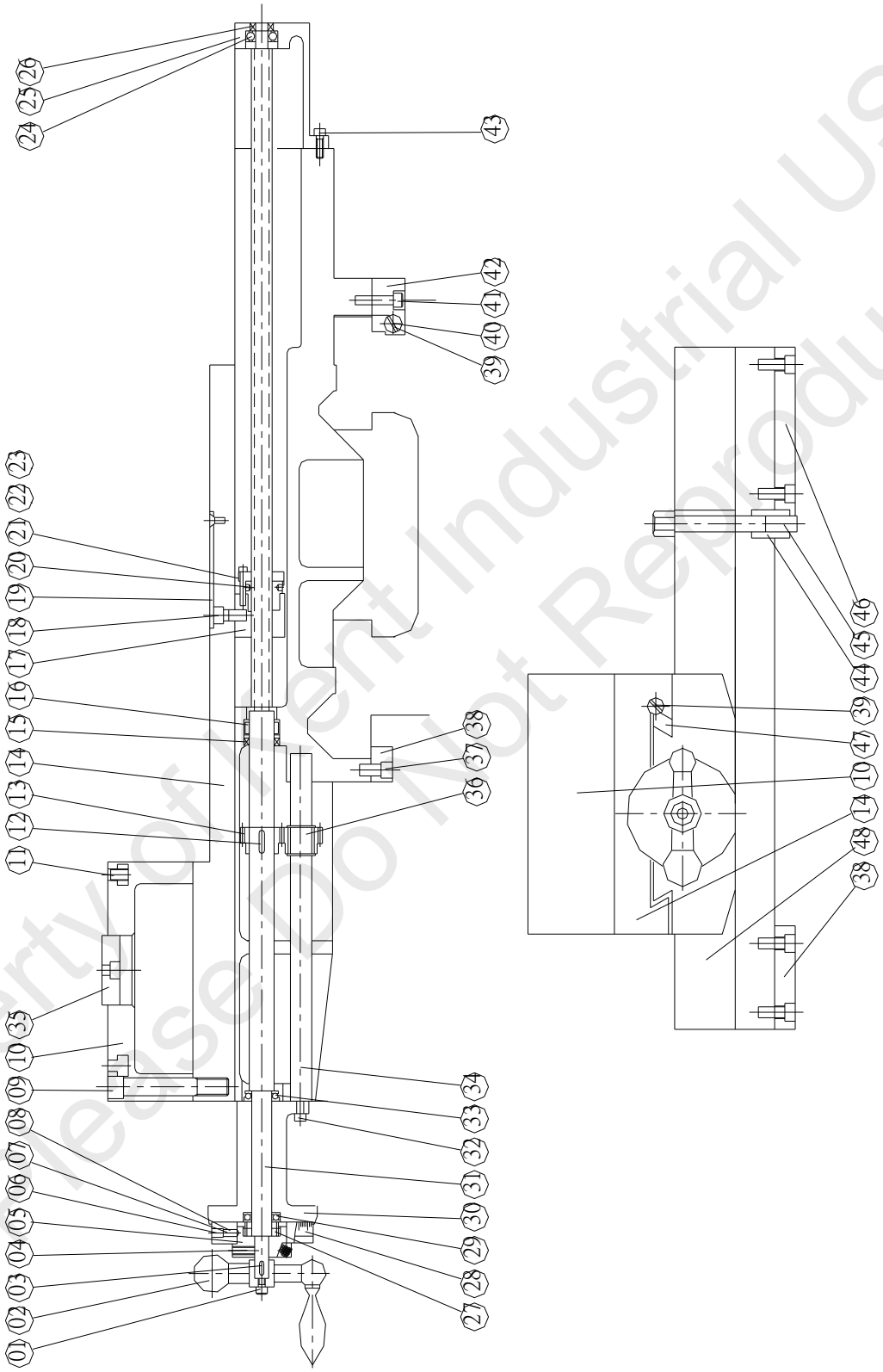

CARRIAGE				
REF NO.	PART NO.	DESCRIPTION	PARTS NAME	Q'TY
0 1		SCREW	M8	1
0 2		HANDLE		1
0 3		KEY	4 x 16	1
0 4		SCRWE	M10	1
0 5	HL- 5005	BUSHING		1
0 6		SCREW	M10	1
0 7		SPRING	M8	1
0 8		BALL	M8	1
0 9		SCREW	M16	4
1 0	HL- 5003	GRADUATON BED		1
1 1	HL- 5023	NUT		4
1 2		KEY	6 x 25	1
1 3	HL- 5009	GEAR	18T	1
1 4	HL- 5002	SLIDING		1
1 5		OIL SEAL	TC30428	1
1 6		BEARING	RNA4905	1
1 7	HL- 5010	NUT		1
1 8		SCREW	M10	2
1 9	HL- 5024	COVER		1
2 0	HL- 5011	NUT		1
2 1	HL- 5012	COLLAR		1
2 2		SCREW	M6	4
2 3		SCREW	M5	4
2 4		BEARING	6004	1
2 5	HL- 5013	BRACKET		1
2 6		OIL COVER	Ø32	1

CARRIAGE				
REF NO.	PART NO.	DESCRIPTION	PARTS NAME	Q'TY
2 7		NUT	AN05	1
2 8	HL- 5006	GRADUATION		1
2 9		BEARING	51105	1
3 0	HL- 5007	BRACKET		1
3 1	HL- 5008	LEAD SCREW		1
3 2		SCREW	M8	2
3 3		BEARING	51105	1
3 4	HL- 5014	SHAFT		1
3 5	HL- 5022	SHAFT		1
3 6	HL- 5015	GEAR	M2.5 x 18T	1
3 7		SCREW	M12	4
3 8	HL- 5019	LOCK PLATE		1
3 9		SCREW	M8	4
4 0	HL- 5021	PAPER		1
4 1		SCREW	M12	5
4 2	HL- 5020	LOCK PLATE		1
4 3		SCREW	M8	3
4 4	HL- 5016	LOCK PLATE		1
4 5		BLOT	M16	1
4 6	HL- 5018	LOCK PLATE		1
4 7	HL- 5004	PAPER		1
4 8	HL- 5001	CARRIAGE		1

Gear Box

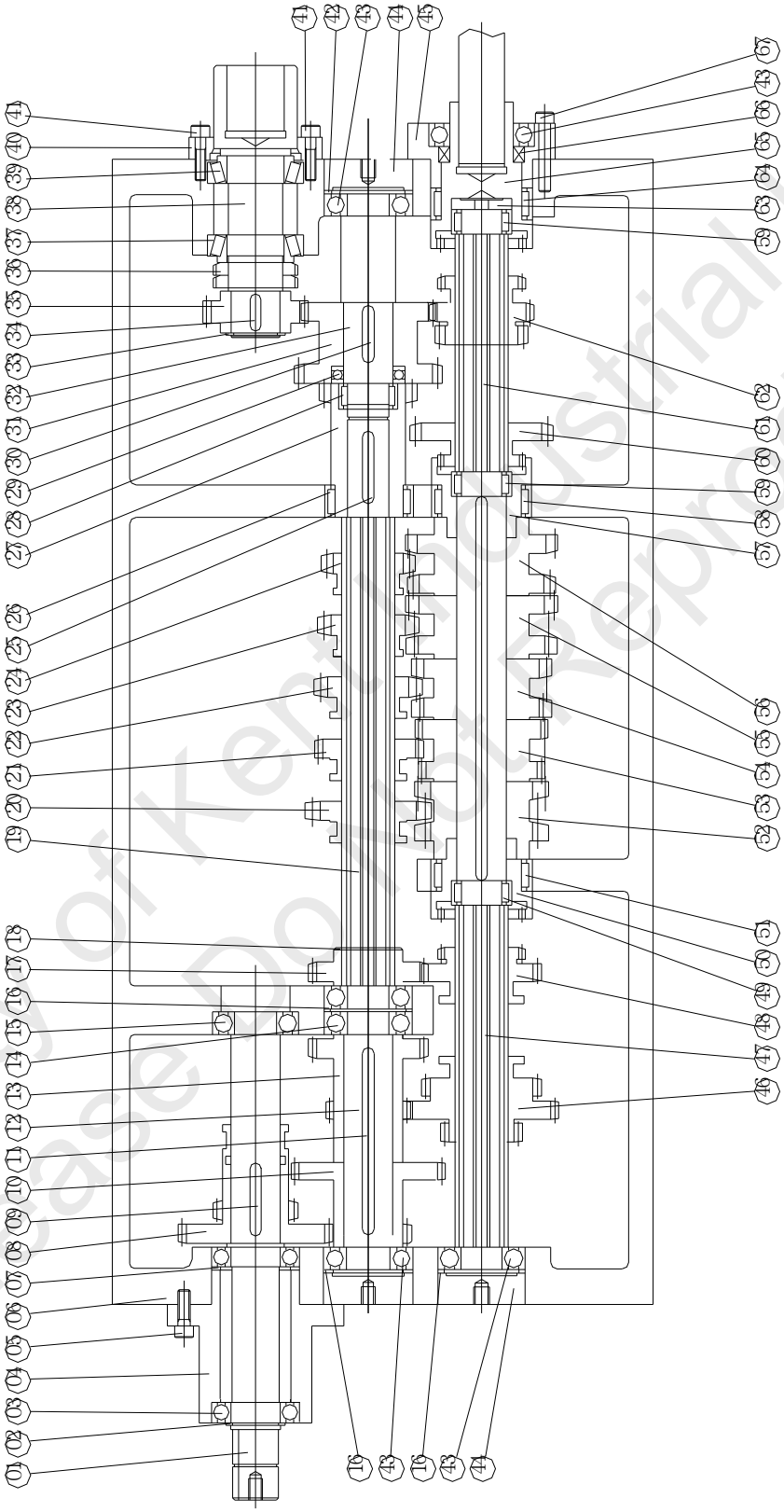

GEAR BOX				
REF NO.	PART NO.	DESCRIPTION	PARTS NAME	Q'TY
0 1	HL- 3005	SHAFT		1
0 2		SNAP RING	S25	1
0 3		BEARING	6007	2
0 4	HL- 3004	COVER		1
0 5		SCREW	M8	3
0 6	HL- 3001	GEAR BOX		1
0 7		SPRING WASHER	Ø62	1
0 8	HL- 3006	GEAR		1
0 9		KEY	8 x 7 x 50L	1
1 0	HL- 3012	GAER		1
1 1		KEY	8 x 7 x 130L	1
1 2	HL- 3011	SHAFT		1
1 3	HL- 3013	GEAR		1
1 4		BEARING	#6206	2
1 5		BEARING	6206	2
1 6		SPRING WASHER	RTW56	1
1 7	HL- 3015	GEAR		1
1 8		SNAP RING	S38	1
1 9	HL- 3014	SHAFT		1
2 0	HL- 3016	GEAR		1
2 1	HL- 3017	GEAR		1
2 2	HL- 3018	GEAR		1
2 3	HL- 3019	GEAR		1
2 4	HL- 3020	GAER		1
2 5		KEY	8 x 7 x 50L	1
2 6		BEARING	RNA4908	1

GEAR BOX				
REF NO.	PART NO.	DESCRIPTION	PARTS NAME	Q'TY
2 7	HL- 3021	GEAR		1
2 8		BEARING	RNA4905	1
2 9		BEARING	RNA4905	1
3 0		KEY	8 x 7 x 40	1
3 1	HL- 3023	GEAR		1
3 2	HL- 3022	SHAFT		1
3 3		SNAP RING	S35	1
3 4		KEY	8 x 7 x 25	2
3 5	HL- 3009	GEAR		1
3 6		NUT	AN08	2
3 7		BEARING	#32008X	1
3 8	HL- 3008	SHAFT		1
3 9		BEARING	#32008X	1
4 0	HL- 5007	COVER		1
4 1		SCREW	M8	3
4 2		SPRING WASHER	Ø68	1
4 3		BEARING	6206	3
4 4	HL- 3010	COVER		3
4 5	HL- 3039	COVER		1
4 6	HL- 3025	GAER		1
4 7	HL- 3024	SHAFT		1
4 8	HL- 3026	GEAR		1
4 9		BEARING	RNA4905	1
5 0	HL- 3028	GEAR		1
5 1		BEARING	RNA4910	1
5 2	HL- 3029	GEAR		1

GEAR BOX				
REF NO.	PART NO.	DESCRIPTION	PARTS NAME	Q'TY
5 3	HL- 3030	GEAR		1
5 4	HL- 3031	GEAR		1
5 5	HL- 3032	GEAR		1
5 6	HL- 3033	GEAR		1
5 7	HL- 3028	GEAR		1
5 8		BEARING	RNA4910	1
5 9		BEARING	RNA4905	2
6 0	HL-3035	GEAR		1
6 1	HL- 3034	SHAFT		1
6 2	HL- 3036	GEAR		1
6 3	HL- 3038	COLLAR		1
6 4		BEARING	RNA4910	1
6 5	HL- 3037	SHAFT		1
6 6		OIL SEAL	TC45608	1
6 7		SCREW	M8	3

Gear Box

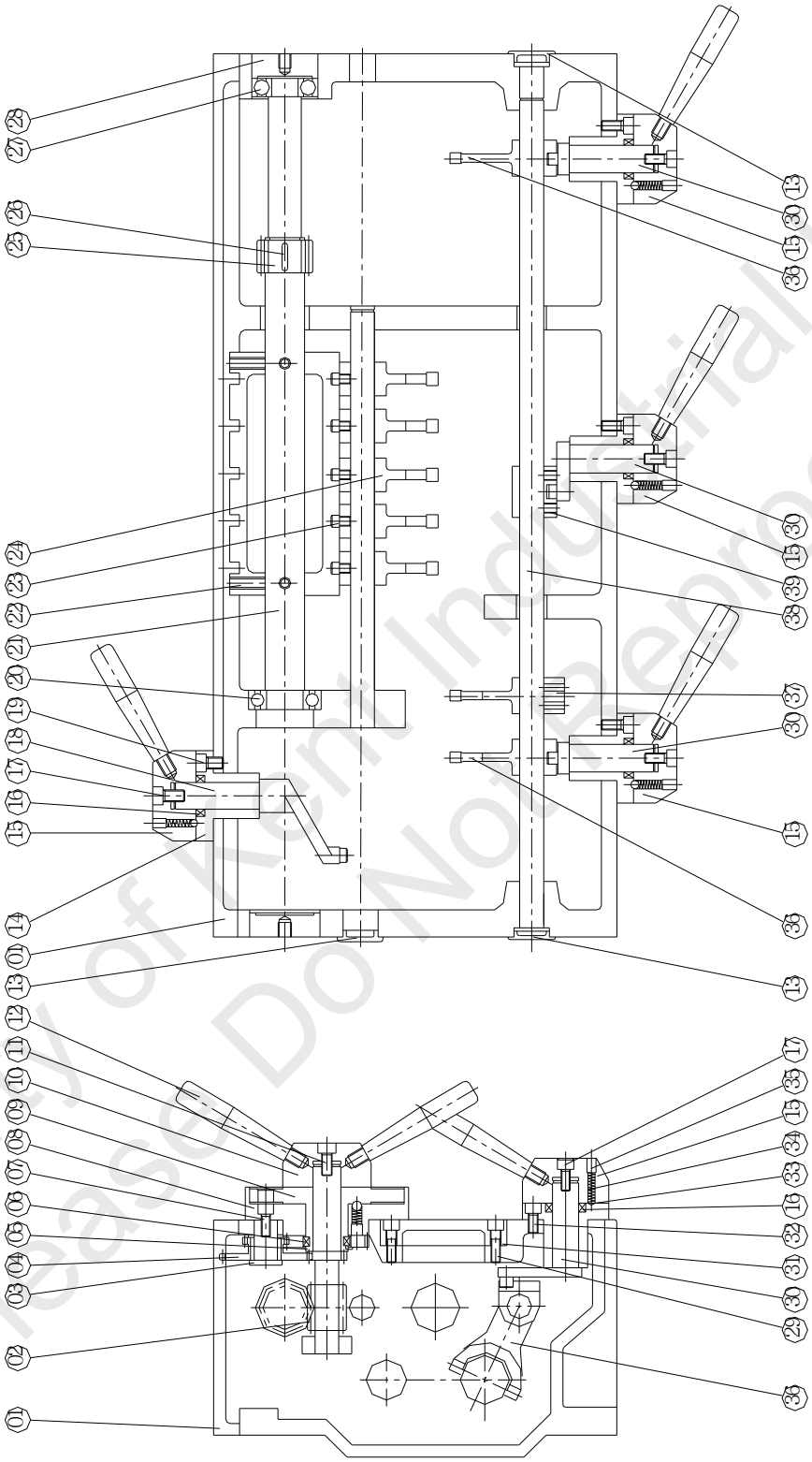

GEAR BOX				
REF NO.	PART NO.	DESCRIPTION	PARTS NAME	Q'TY
0 1	HL- 3002	COVER		1
0 2	HL- 3055	SHAFT		1
0 3	HL- 3056	SHAFT		1
0 4	HL- 3057	GEAR		1
0 5		SNAP RING	S38	1
0 6		DEY	5 x 5 x 8L	1
0 7		SCRW	M8	4
0 8	HL- 3052	BUSHING		1
0 9	HL- 3053	NAME-PLATE COVER		1
1 0	HL- 2073	ROCKER ARM		4
1 1		SCREW	M8	1
1 2	HL- 2072	HANDLE		6
1 3		OIL COVER	ø32	3
1 4	HL- 3049	BUSHING		4
1 5	HL- 2073	ROCKER ARM		4
1 6		OIL SEAL	TC25357	4
1 7		SCREW	M8	4
1 8	HL- 3050	FORK ARM		1
1 9		SCRW	M8	8
2 0		BEARING	6206	1
2 1	HL- 3040	SHAFT		1
2 2		SET SCREW	M10	4
2 3	HL- 2055	PIN		5
2 4	HL- 3044	FORK		5
2 5	HL- 3042	GEAR		1
2 6		KEY	6 x 6 x 25L	1

GEAR BOX				
REF NO.	PART NO.	DESCRIPTION	PARTS NAME	Q'TY
2 7		BEARING	6305	1
2 8	HL- 3010	COVER		1
2 9		SCREW	M8	8
3 0	HL- 3051	FORK ARM		3
3 1	HL- 3003	COVER		1
3 2		SCREW	M8	2
3 3		BALL	M8	5
3 4		SPRING	M8	5
3 5		SCRW	M10	5
3 6	HL- 3047	FORK		2
3 7	HL- 3048	FORK		1
3 8	HL- 3045	SHAFT		1
3 9	HL- 3046	FORK		1

End Gears

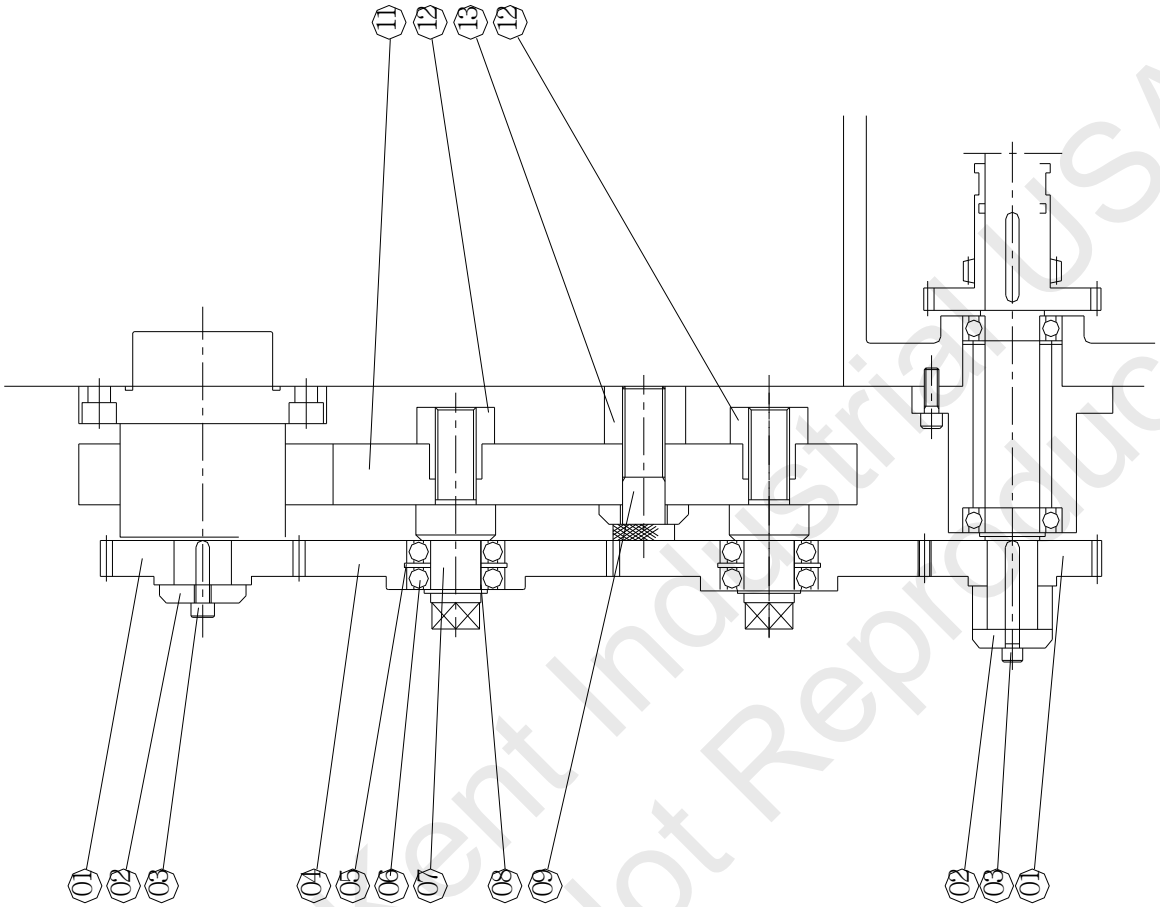

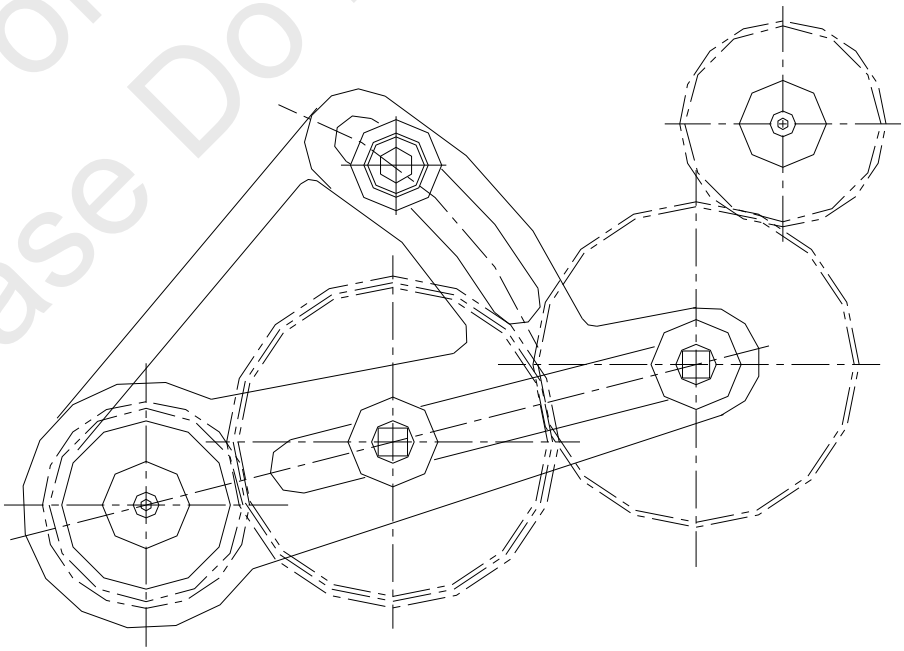

GEAR BOX				
REF NO.	PART NO.	DESCRIPTION	PARTS NAME	Q'TY
0 1	HL- 3059	GEAR		1
0 2	HL- 3064	WASHER		2
0 3		SCREW	M8	2
0 4	HL- 3060	GEAR		2
0 5		SNAP RING	R55	2
0 6		BEARING	6006	4
0 7	HL- 3061	SHAFT		2
0 8		SNAP RING	S30	2
0 9		SCREW	M24	1
1 0		WASHER	M24	1
1 1	HL- 3058	BRACKET		1
1 2	HL- 3062	NUT		2
1 3	HL- 3063	WASHER		1

Apron

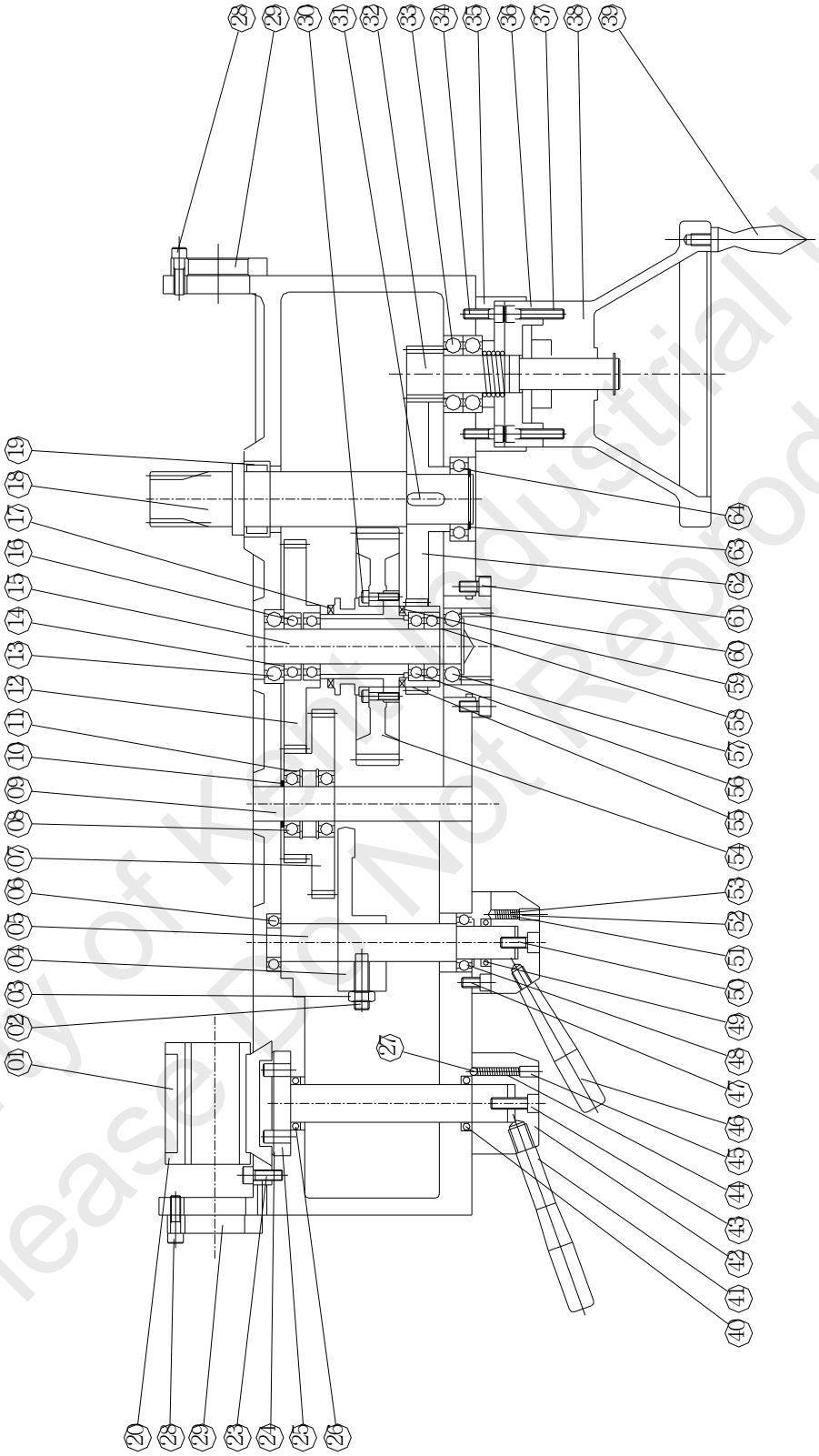

APRON				
REF NO.	PART NO.	DESCRIPTION	PARTS NAME	Q'TY
0 1	HL- 4043	NUT		1
0 2		SCREW	M12	1
0 3		NUT	M12	1
0 4	HL- 4038	FORK		1
0 5	HL- 4037	SHAFT		1
0 6		BEARING	6005	1
0 7	HL- 4012	GEAR		1
0 8		BEARING	6006	2
0 9	HL- 4011	SHAFT		1
1 0		SNAP RING	S30	2
1 1		SNAP RING	R55	2
1 2	HL- 4005	GEAR		1
1 3		BEARING	6206	1
1 4		SPRING WASHER	STW35	1
1 5	HL- 4004	SHAFT		1
1 6		BEARING	6006	2
1 7	HL- 4007	CLUTCH GEAR		1
1 8	HL- 4002	GEAR-SHAFT		1
1 9		BEARING	RNA4908	1
2 0	HL- 4033	NUT		1
2 1	HL- 4001	APRON		1
2 2		SCREW	M8	4
2 3	HL- 4035	PAPER		1
2 4		PIN	ø10	2
2 5	HL- 4032	SHAFT		1
2 6		OIL SEAL	TC30428	1

APRON				
REF NO.	PART NO.	DESCRIPTION	PARTS NAME	Q'TY
2 7		BALL	M8	1
2 8		SCREW	M8	2
2 9	HL- 4042	COVER		2
3 0		SCREW	M6	6
3 1		KEY	8 x 7 x 30	1
3 2	HL- 4026	GEAR		1
3 3		BEARING	6206	2
3 4		SCREW	M8	2
3 5	HL- 4027	COVER		1
3 6	HL- 4028	GRADUATION		1
3 7		SCREW	M8	3
3 8	HL- 4029	HANDLE WHEEL		1
3 9		HANDLE	ø25	1
4 0		OIL SEAL	TC30428	1
4 1	HL- 4030	HANDLE		1
4 2	HL- 4031	ROCKER ARM		1
4 3		SCREW	M8	1
4 4		SPRING	M8	1
4 5		SET SCREW	M10	1
4 6	HL- 2072	HANDLE		1
4 7		SCREW	M8	2
4 8		BEARING	6005	1
4 9		OIL SEAL	TC253507	1
5 0		SCREW	M8	1
5 1		SPRING	M8	1
5 2		SCREW	M10	1

APRON				
REF NO.	PART NO.	DESCRIPTION	PARTS NAME	Q'TY
5 3		STEEL BALL	ø8	1
5 4	HL- 4008	GEAR		1
5 5	HL- 4009	GEAR		1
5 6		BEARING	6006	2
5 7		BEARING	6206	1
5 8		SNAP RING	S30	1
5 9	HL- 4006	SPLING SHAFT	6206	1
6 0		SCREW	M6	4
6 1		SCREW	M8	3
6 2	HL- 4003	GEAR		1
6 3		SNAP RING	S40	1
6 4		BEARING	6008	1

Apron

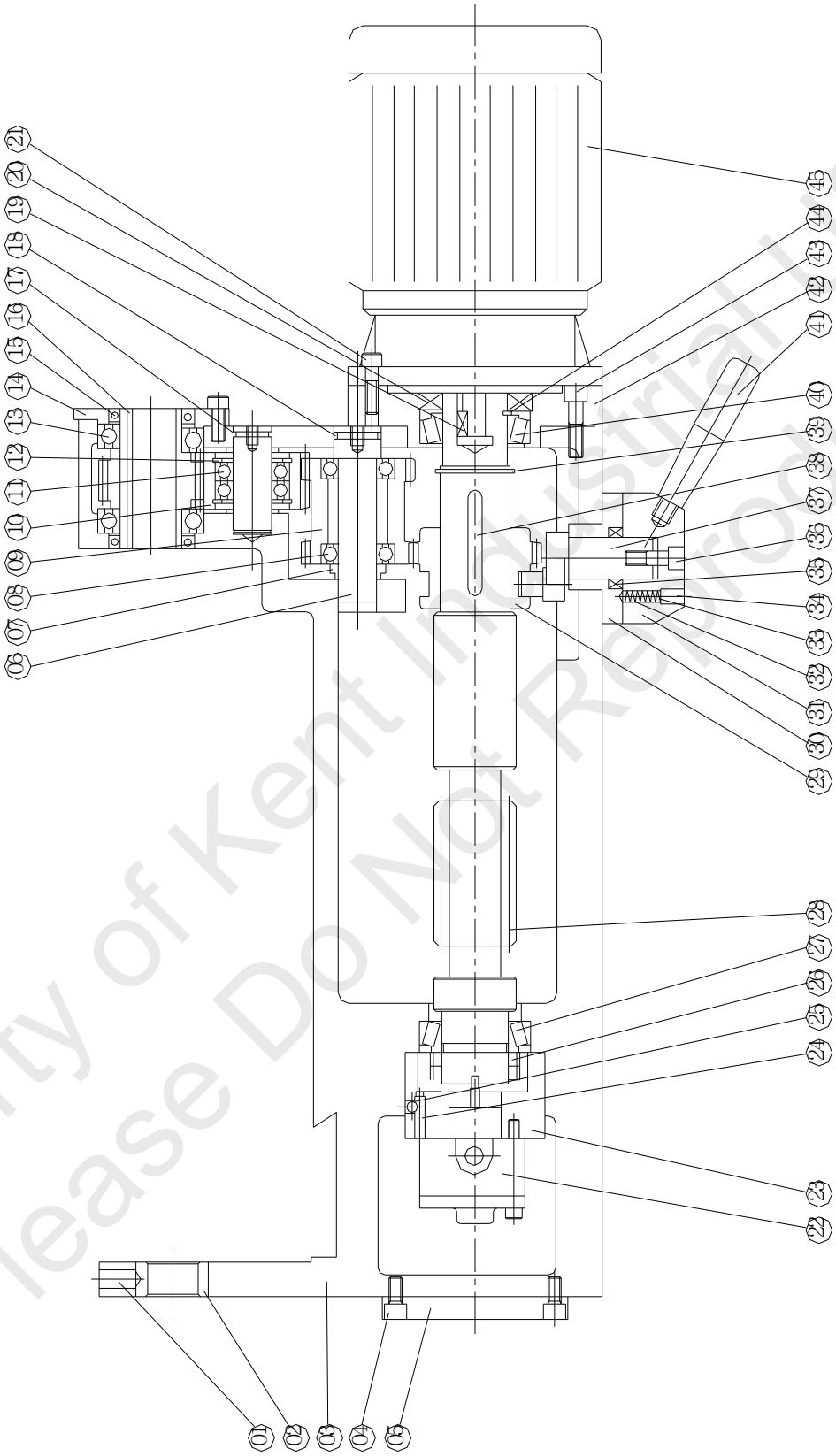

APRON				
REF NO.	PART NO.	DESCRIPTION	PARTS NAME	Q'TY
0 1		SCREW	M10	1
0 2	HL- 4015	BUSHING		1
0 3	HL- 4001	APRON		1
0 4		SCREW	M8	2
0 5	HL- 4025	COVER		1
0 6	HL- 4018	SHAFT-F		1
0 7	HL- 4020	COLLAR		1
0 8		BEARING	6005	2
0 9	HL- 4019	GEAR		1
1 0	HL- 4017	GEAR		1
1 1		BEARING	6005	2
1 2		SNAP RING	R47	2
1 3		BEARING	6008	2
1 4	HL- 4014	COVER		1
1 5		OIL SEAL	TC40558	2
1 6	HL- 4013	GEAR		1
1 7		O-RING	P21	1
1 8		O-RING	G25	1
1 9		KEY	5 x 5 x 15L	1
2 0		OIL SEAL	TC40708	1
2 1		SCREW	M8	4
2 2		PUMP	AM2	1
2 3	HL- 4023	PUMP		1
2 4		SET SCREW	M6	1
2 5		BALL	M8	1
2 6		NUT	AN08	2

APRON				
REF NO.	PART NO.	DESCRIPTION	PARTS NAME	Q'TY
2 7		TAPER ROLL	32008	1
2 8	HL- 4021	STICK		1
2 9	HL- 4022	GEAR		1
3 0	HL- 4040	BUSHING		1
3 1	HL- 2037	ROCKER ARM		1
3 2		BALL	M8	1
3 3		SPRING	M8	1
3 4		SCREW	M10	1
3 5		OIL SEAL	TC25357	1
3 6		SCREW	M8	1
3 7	HL- 4041	SHAFT		1
3 8		KEY	8 x 7 x 65L	1
3 9		SNAP RING	S42	1
4 0		TAPER ROLL	32008	1
4 1	HL- 2072	HANDLE		1
4 2	HL- 4024	COVER		1
4 3		SCREW	M8	4
4 4		SNAP RING	S40	1
4 5		MOTOR	1 / 8HP	1

Tailstock

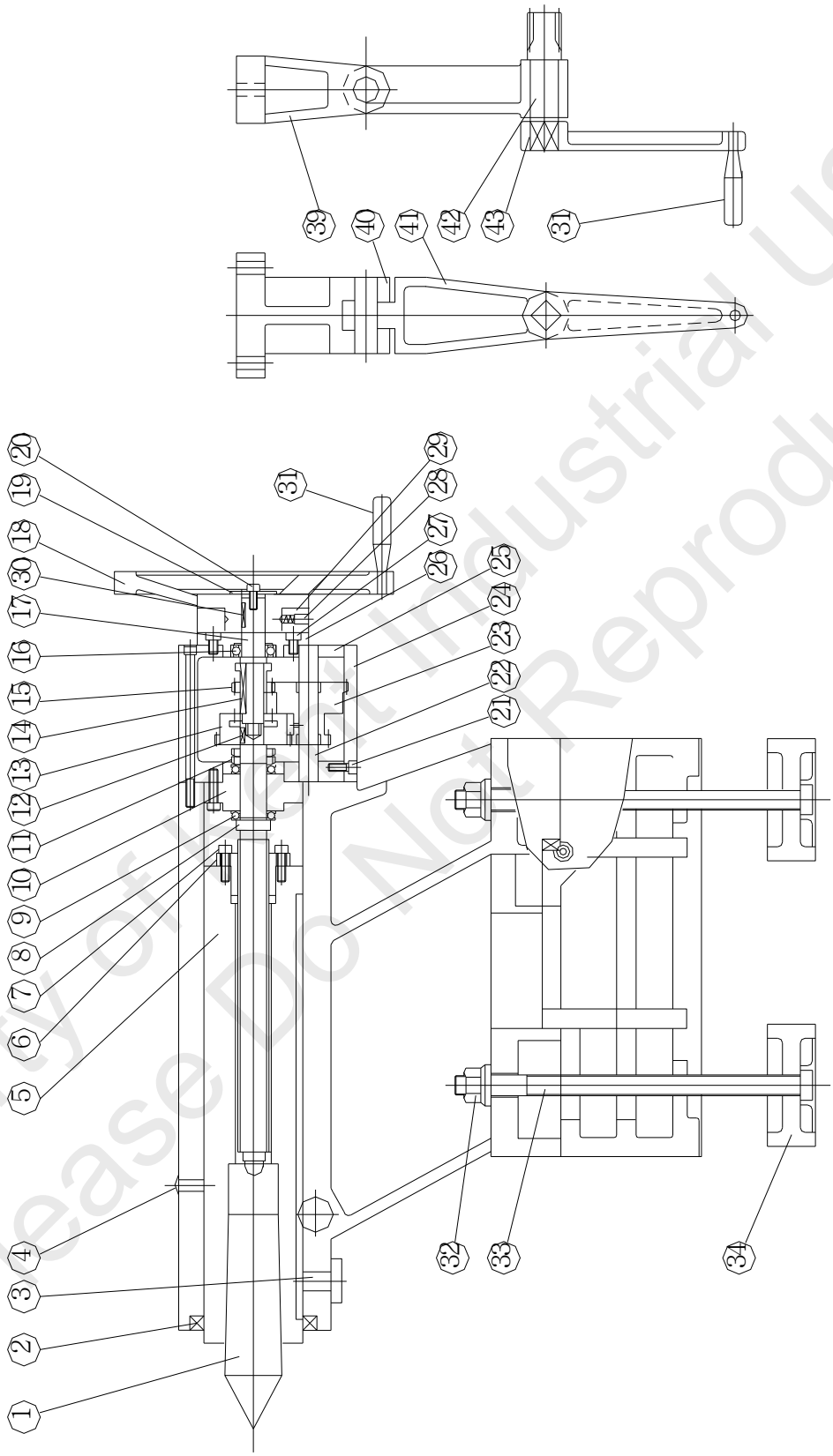

TAILSTOCK				
REF NO.	PART NO.	DESCRIPTION	PARTS NAME	Q'TY
0 1		CENTER	MT#6	1
0 2		OIL SEAL	TC-10513013	1
0 3	HL- 7019	T-KEY		1
0 4		OILER	3 / 8"	1
0 5	HL- 7004	BARREL		1
0 6	HL- 7005	NUT		1
0 7		SCREW	M8	3
0 8	HL- 7009	LEAD SCREW		1
0 9		BEARING	51106	2
1 0	HL- 7008	COVER		1
1 1		NUT	AN06	2
1 2		KEY	5 x 5 x 16L	1
1 3	HL- 7010	GEAR		1
1 4		KEY	5 x 5 x 50L	1
1 5	HL- 7012	GEAR		1
1 6		BEARING	6005RS	1
1 7	HL- 7011	SHAFT		1
1 8	HL- 7014	HANDLE WHEEL		1
1 9	HL- 5064	WASHER		1
2 0		SCREW	M8	1
2 1		SCREW	M8	4
2 2	HL- 7016	SHAFT		1
2 3	HL- 7017	GEAR		1
2 4	HL- 7007	COVER		1
2 5	HL- 7006	GEAR BOX		1
2 6	HL- 7013	BRACKET		1

TAILSTOCK				
REF NO.	PART NO.	DESCRIPTION	PARTS NAME	Q'TY
2 7		SCREW	M8	2
2 8		SET SCREW	M10	1
2 9	HL- 7015	INDEX RING		1
3 0		KEY	5 x 5 x 25L	1
3 1		HANDLE		1
3 2	HL- 7026	NUT		2
3 3	HL- 7025	BOLT		2
3 4	HL- 7024	CLAMP		2
3 5		SET SCREW	M16	1
3 6	HL- 7003	GIB		1
3 7	HL- 7002	BASE		1
3 8	HL- 7001	CASTING		1
3 9	HL- 7029	BRACKET		1
4 0	HL- 7032	PIN		1
4 1	HL- 7030	BRACKET		1
4 2	HL- 7031	GEAR		1
4 3	HL- 7033	LEVER		1

TAILSTOCK; CONTROLS

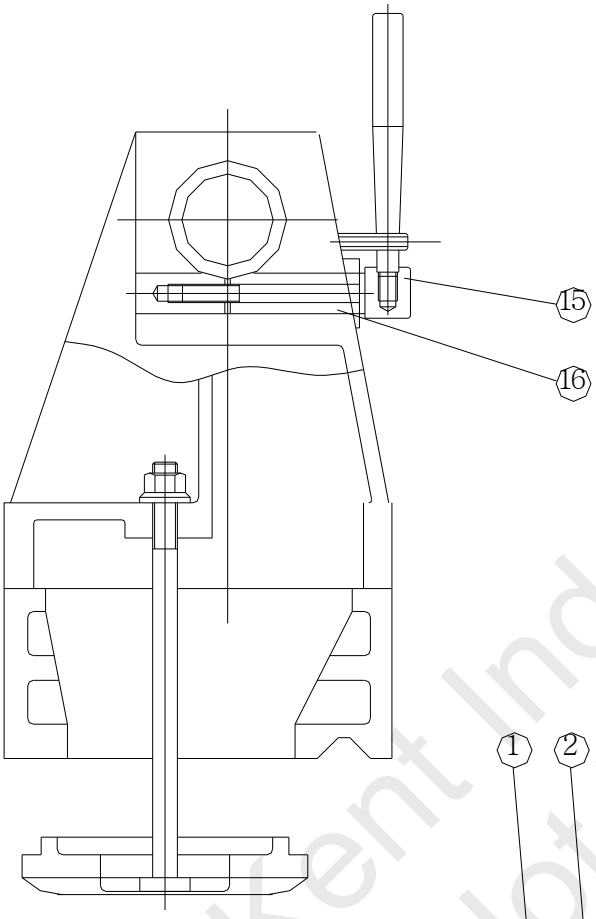

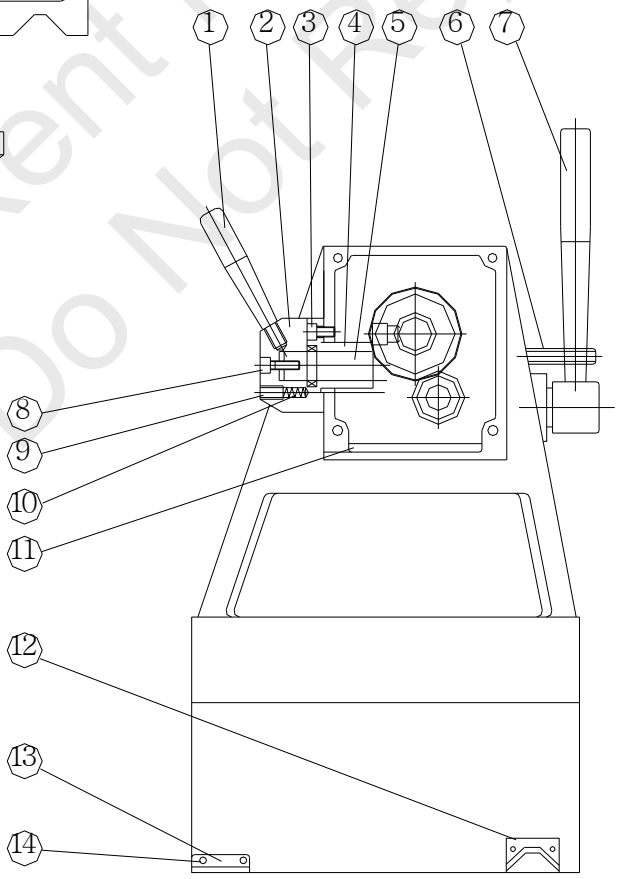

TAILSTOCK				
REF NO.	PART NO.	DESCRIPTION	PARTS NAME	Q'TY
0 1	HL- 2056	HANDLE		1
0 2	HL- 2073	LEVER BOSS		1
0 3		SCREW	M8	2
0 4	HL- 2074	BUSH		1
0 5	HL- 7018	LEVER		1
0 6	HL- 7023	SCREW		1
0 7	HL- 7022	HANDLE		1
0 8		SCREW	M8	1
0 9		SET SCREW	M10	1
1 0		STEEL BALL	ø8	1
1 1	HL- 7007	COVER		1
1 2	HL- 7028	WIPER		2
1 3	HL- 7027	WIPER		2
1 4		SCREW	M5	8
1 5	HL-7021	STUD		1
1 6	HL- 7020	BUSH & NUT		1

Steady Rest

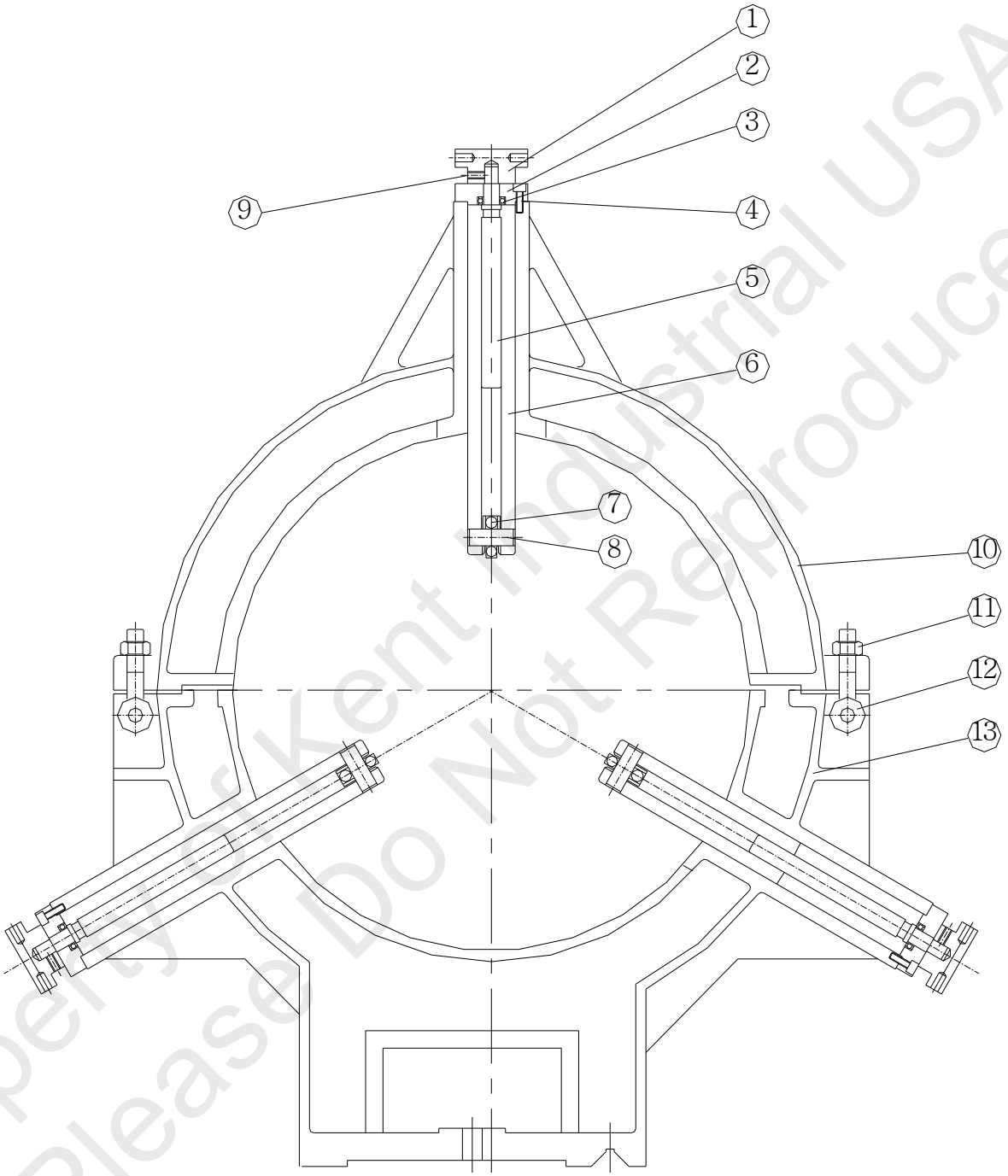

STEADY REST				
REF NO.	PART NO.	DESCRIPTION	PARTS NAME	Q'TY
0 1	HL- 8003	HANDLE		3
0 2	HL- 8004	COVER		3
0 3		BEARING	51103	3
0 4		SCREW	M8	9
0 5	HL- 8005	ADJUSTMENT SCREW		3
0 6	HL- 8006	SHAFT		3
0 7		BAERING		3
0 8	HL- 8007	SHAFT		3
0 9		SET SCREW	M8	3
1 0	HL- 8001	CASTING		1
1 1		NUT		2
1 2	HL- 8009	BOLT		2
1 3	HL- 8002	CASTING		1

Follow Rest

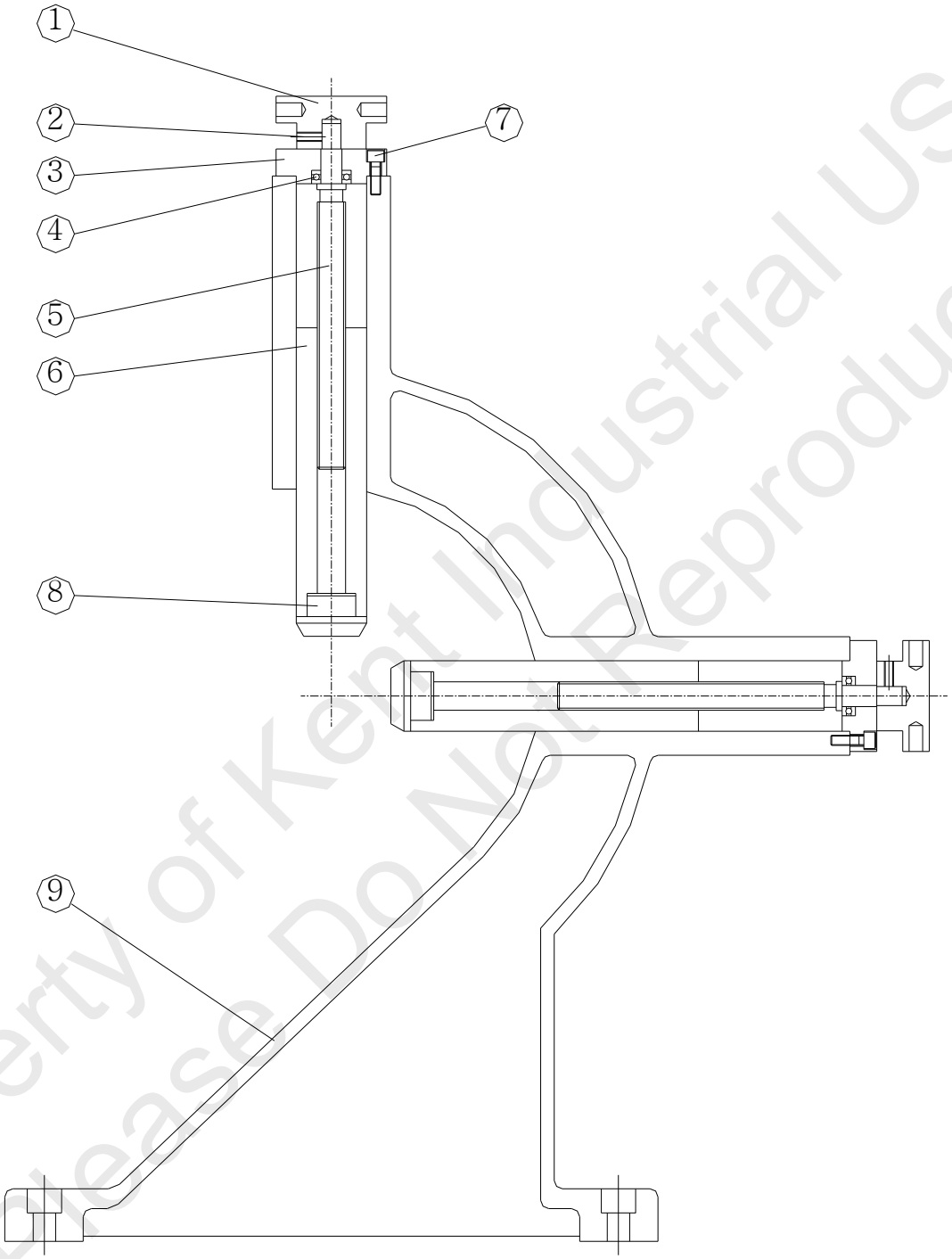

FOLLOW REST				
REF NO.	PART NO.	DESCRIPTION	PARTS NAME	Q'TY
0 1	HL- 8003	HANDLE		2
0 2		SET SCREW		2
0 3	HL- 8004	COVER		2
0 4		BEARING	51103	2
0 5	HL- 8005	ADJUSTMENT		2
0 6	HL- 8102	SHAFT		2
0 7		SCREW		6
0 8	HL- 8103	PAD		2
0 9	HL- 8101	FOLLOW REST		1