Specifications	KGS-410AH/*AHD	KGS-515AH/*AHD	KGS-620AH/*AHD
Working surface of table	1060x410 (41-3/4x16")	1500x485 (59x19-1/8")	2040x600 (80-1/4x23-1/2")
Maximum surface ground	1100x420 (43x16-1/2")	1500x500 (59x19-3/4")	2100x600 (82-1/2x23-1/2")
Maximum distance between table and wheel center	600 (23-5/8")	530 (20-3/4")	530 (20-3/4")
Table speed (Hydraulic)	4-22m/min (13-70fpm)		3-25m/min (10-80fpm)
Automatic crossfeed to table per stroke, variable	0.5-12 (0.02"-0.5")		
Power crossfeed of column	1500mm/min (60"/min)		
Power head elevation	150mm/min (6"/min)		
Crossfeed on handwheel 1 revolution 1 graduation	5.0 (0.2") 0.02 (0.001")		
Vertical downfeed on handwheel 1 revolution 1 graduation	0.5 (0.02") 0.002 (0.0001")		
*Automatic downfeed increment variable 6 steps	0.005-0.04 (0.0002-0.0016")		
Wheel speed rpm, 60hz	1740		
Wheel dimension (O.D.xTxI.D.)	305x38.1x127 (12"x1-1/2"x5")	355x50.8x127 (14"x2"x5")	355x50.8x127 (14"x2"x5")
Wheel spindle motor (V-3 grade)	5HP	7.5HP	7.5HP
Hydraulic pump motor	3HP	5 HP	7.5HP
Automatic crossfeed motor	1/4HP		
Power elevation motor	1/4HP	1/2HP	1/2HP
Coolant pump	1/8HP		
Machine net weight	3700kgs (8140 lbs)	5250kgs (11550 lbs)	6250kgs (13750 lbs)
Gross weight	4250kgs (9350 lbs)	6250kgs (13310 lbs)	7050kgs (15510 lbs)
Packing dimension	3175x1960x2210 (125"x77"x87")	4470x2210x2515 (176"x87"x99")	5410x2500x2300 (213"x99"x91")

* for AHD model

Property of Kent Industrial USA
Do Not Reproduce

CONTENTS

Property of Kent Industrial USA
Do Not Reproduce

Property of Kent Industrial USA
Do Not Reproduce

*THIS MACHINE HAS BEEN FULLY TESTED, ADJUSTED AND INSPECTED FOR CORRECT ALIGNMENT AND OPERATION PRIOR TO SHIPMENT. IN TRANSIT OR INSTALLATION, PLEASE ENSURE THAT THE MACHINE IS NOT BUMPED WHEN BEING ROLLED OR SET DOWN TO AVOID ANY FAILURE.

A). Transition

By Fork Lifter

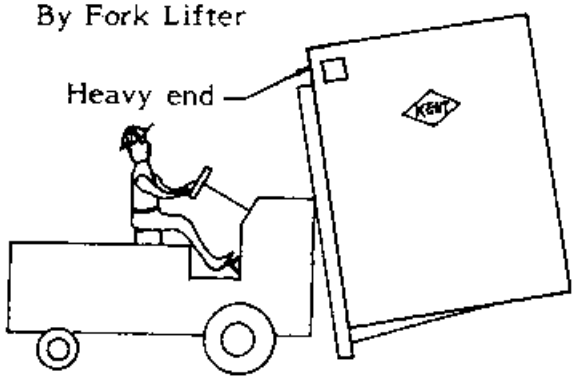

By Hoist or Chain Block

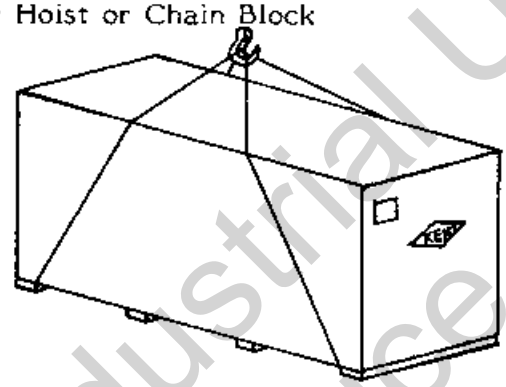

Net Weight :	KGS-410AH, 410AHD	3700kgs	8140lbs
	KGS-515AH, 515AHD	5250kgs	11550lbs
	KGS-620AH, 620AHD	6250kgs	13750lbs

B). Unpacking

1). When unpacking the crate, starts from the upper cover, then follow the sequence of front, rear, left and right.

2). Do not use hammer to break down the crate, please use nail extruder in stead of.

3). To avoid damaging the machine or paint, please pay more attention when take away the wooden cover.

4). Loosen the fixing screws before lifting machine, see figure a and b.

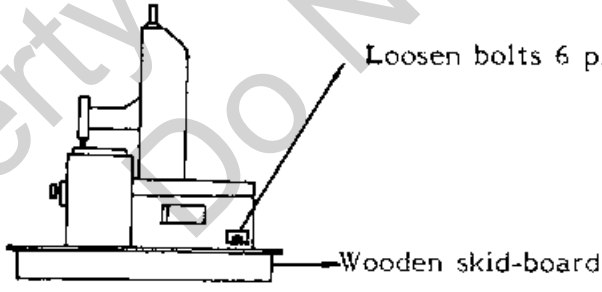

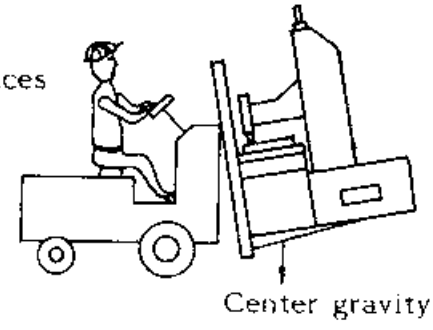

5). Center gravity of machine

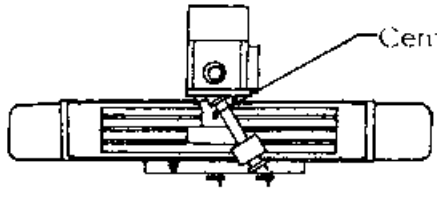

KGS-410, 515

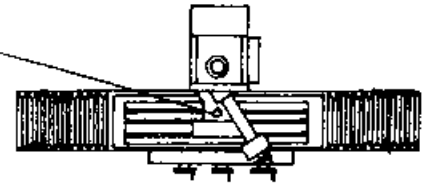

KGS-620

* CAUTION: Do not use Hoist to lift up these column movement type of machine, use Fork Lifter all the time.

Property of Kent Industrial USA
Do Not Reproduce

6). Packing diagram

PACKING DIAGRAM

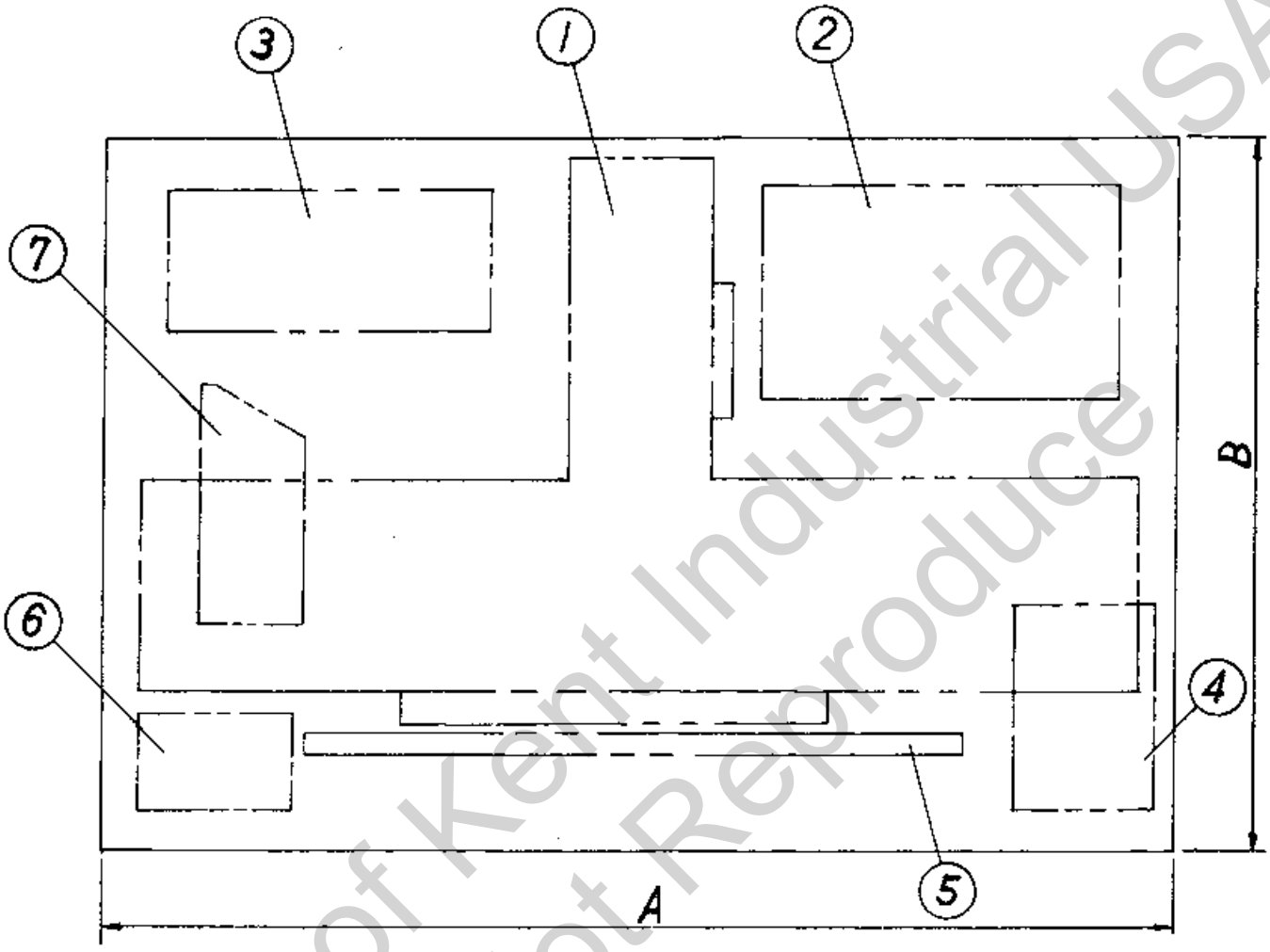

M/C type	KGS-410AH(D)	KGS-515AH(D)	KGS-620AH(D)
A	126"	175"	252"
B	76"	90"	94"

1. Machine Base
2. Hydraulic Tank
3. Coolant Tank
4. Standard Accessories
5. Dust Shield
6. Optional Accessories and Wheel
7. Electric Control Box

Property of Kent Industrial USA
Do Not Reproduce

C). Choice of site

The output of the machine and the degree of accuracy of the components produced depend to a very special degree on the correct choice of site for the erection of the machine.

The grinding machine should be handled just as carefully as a jig-borer. After all, extreme precision is demanded of both types of machine.

Grinding machines are often found between milling, shaping, drilling and even slotting machines, without any thought of the consequences of such planning. In such cases , it is impossible to achieve good surface finishes, as the vibrations from the milling machines or the jerks from the reversal of the shaper stroke etc. are transmitted to the grinding machine. Chatter marks can be found on the ground surface, which are due to these extraneous influences.

Unsolid floor is unsuitable for taking the machine as it results in distortion of the machine bed.

(1). KGS—410AH(AHD) Floor plan

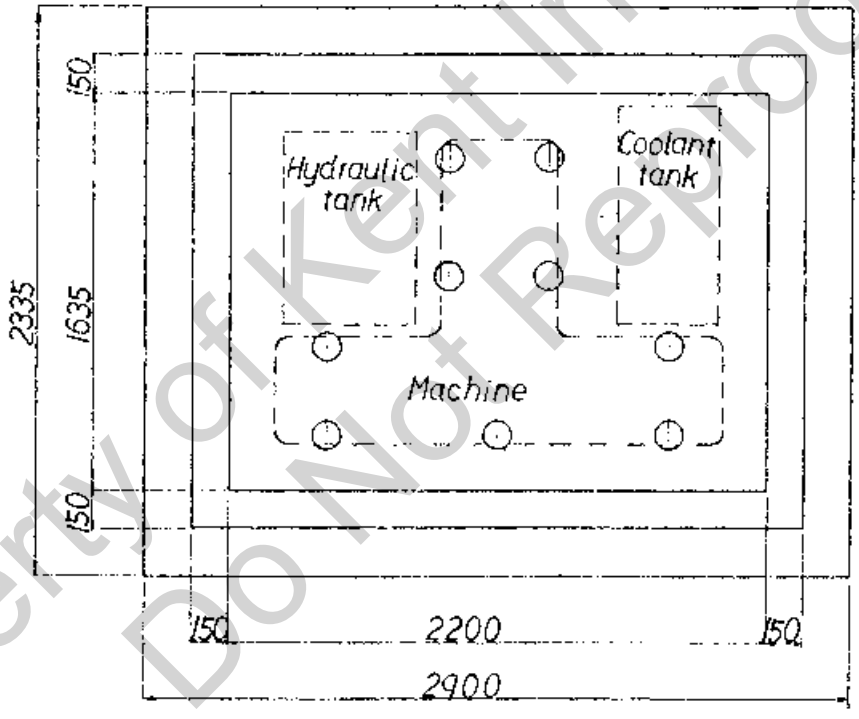

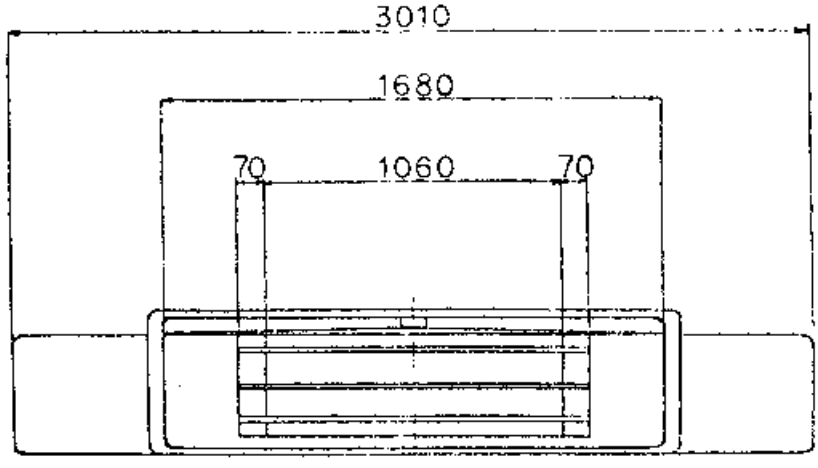

Working Table

Property of Kent Industrial USA
Do Not Reproduce

(2). KGS——515AH(AHD) Floor plan

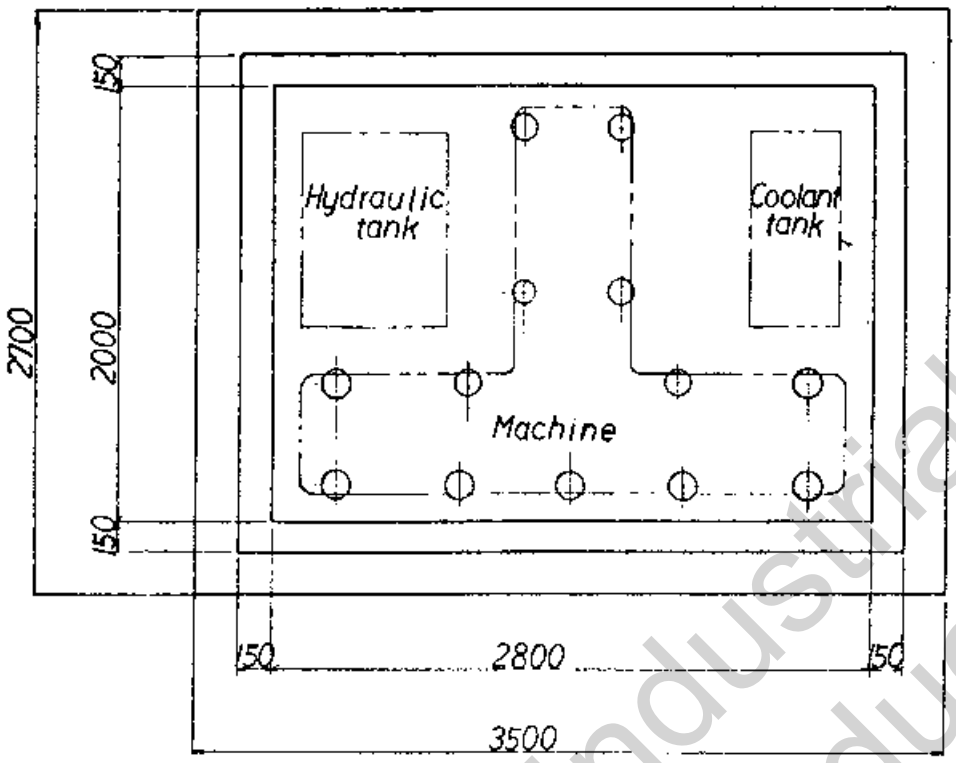

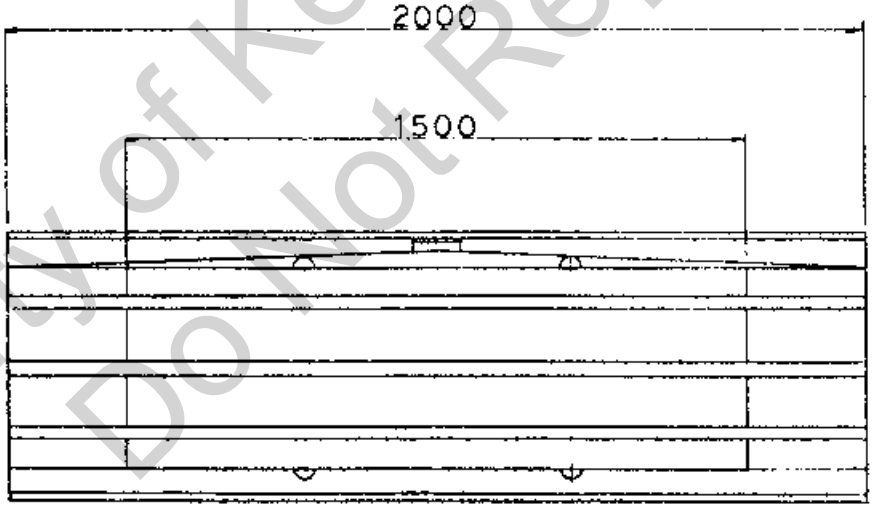

Working Table

Property of Kent Industrial USA
Do Not Reproduce

(3). KGS——620AH(AHD) Floor plan

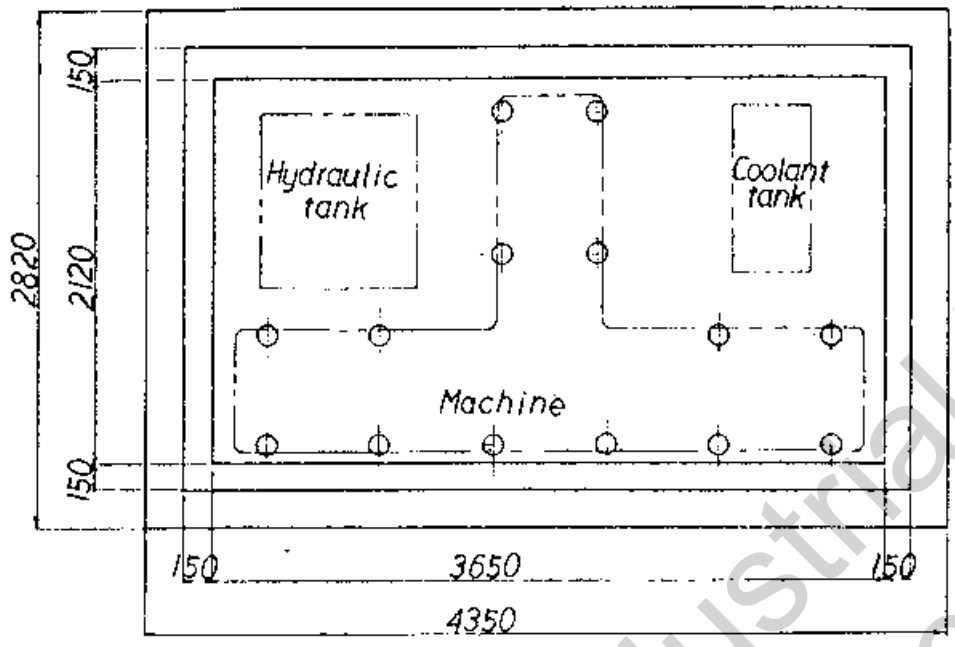

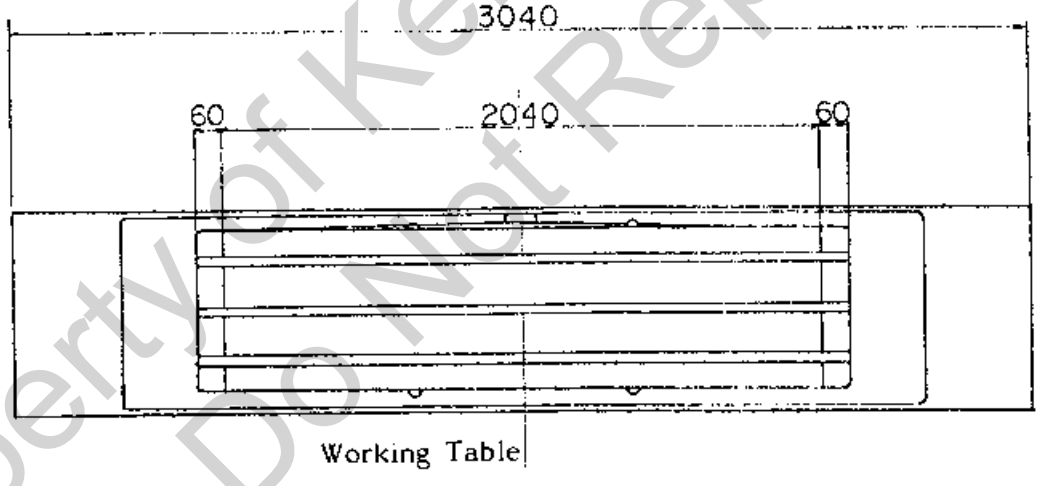

Property of Kent Industrial USA
Do Not Reproduce

D). Installation

(1). Power consumption

KGS-410AH, 410AHD	Total: 8.5KW
KGS-515AH, 515AHD	Total: 13KW
KGS-620AH, 620AHD	Total: 20KW

(2). Foundation

a. Use the anchor bolts

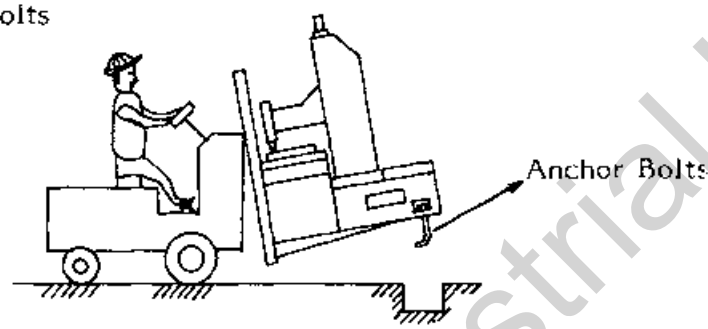

* Lock the anchor bolts on the machine by nut, and let the thread portion at least 35mm for adjust.
* Lay down the machine slowly to aim anchor bolts at foundation holes.
* Levelling the machine by taper block.
* Fill up the holes with concrete.

KGS-410AH(AHD)

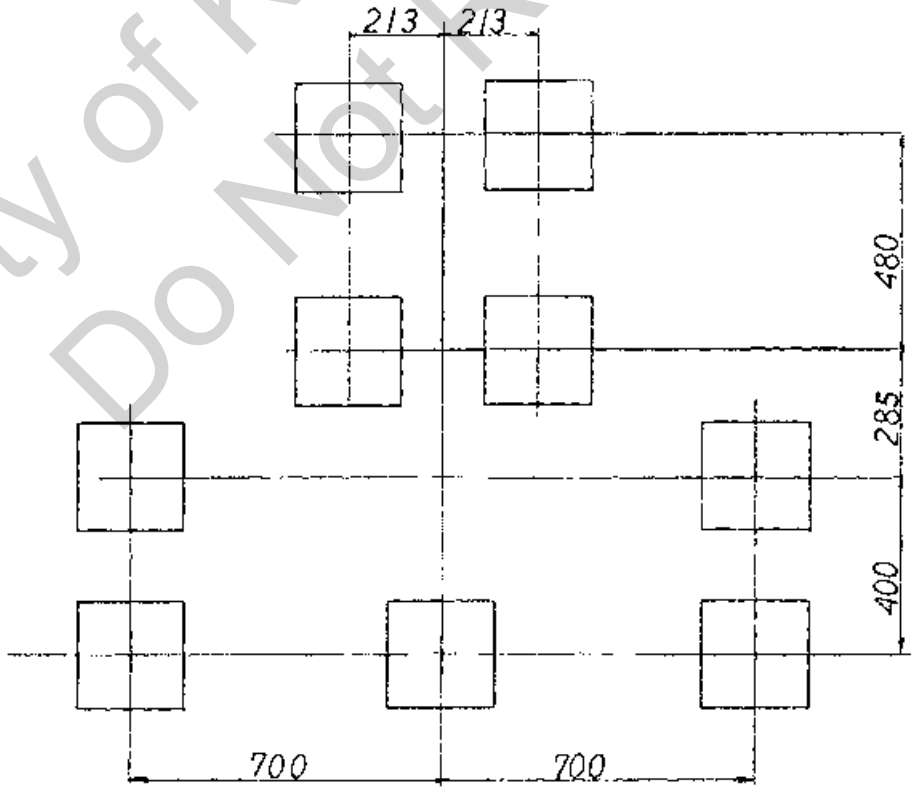

Property of Kent Industrial USA
Do Not Reproduce

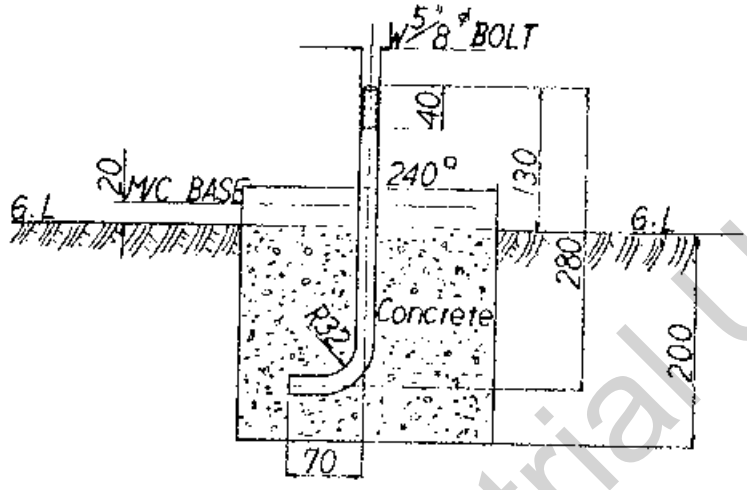

KGS——515AH(AHD)

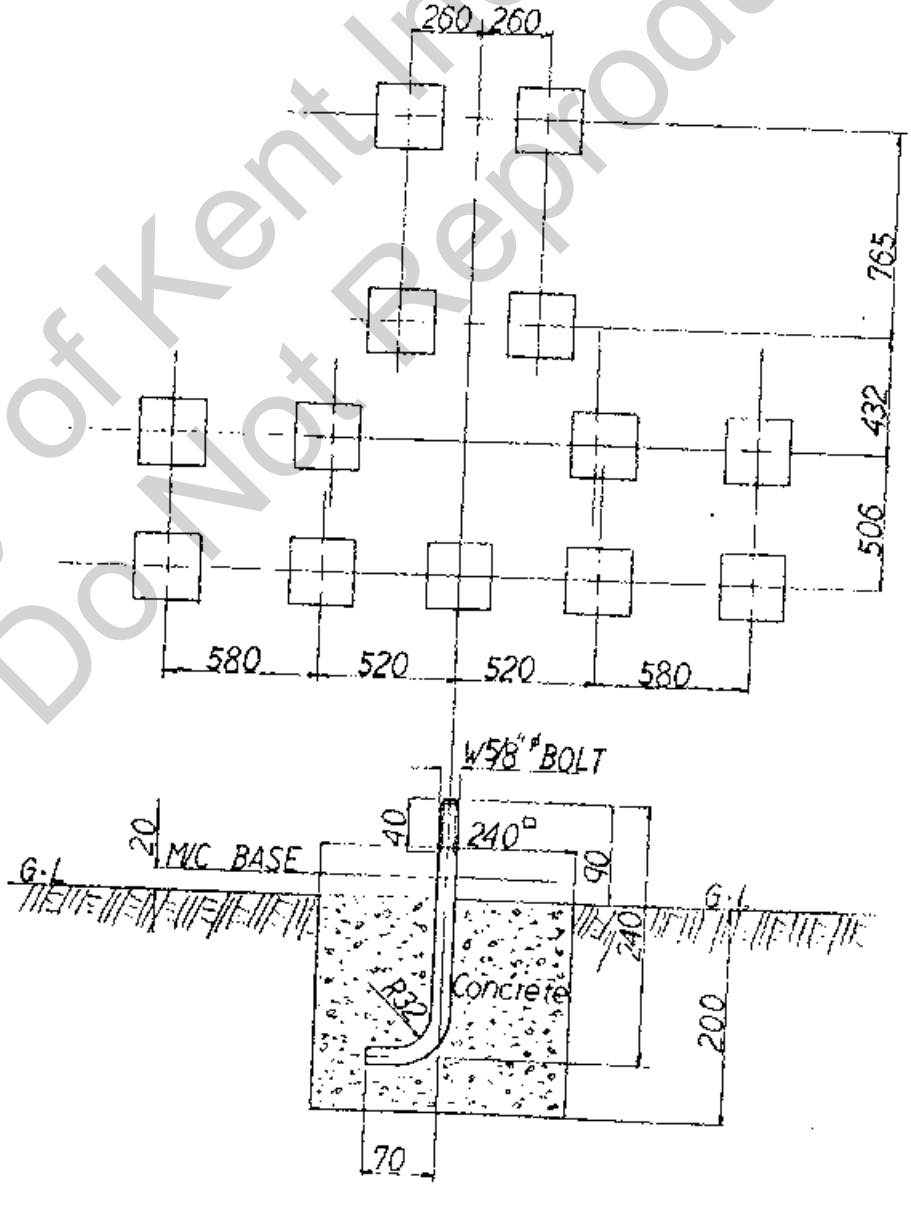

Property of Kent Industrial USA
Do Not Reproduce

KGS——620 AH(AHD)

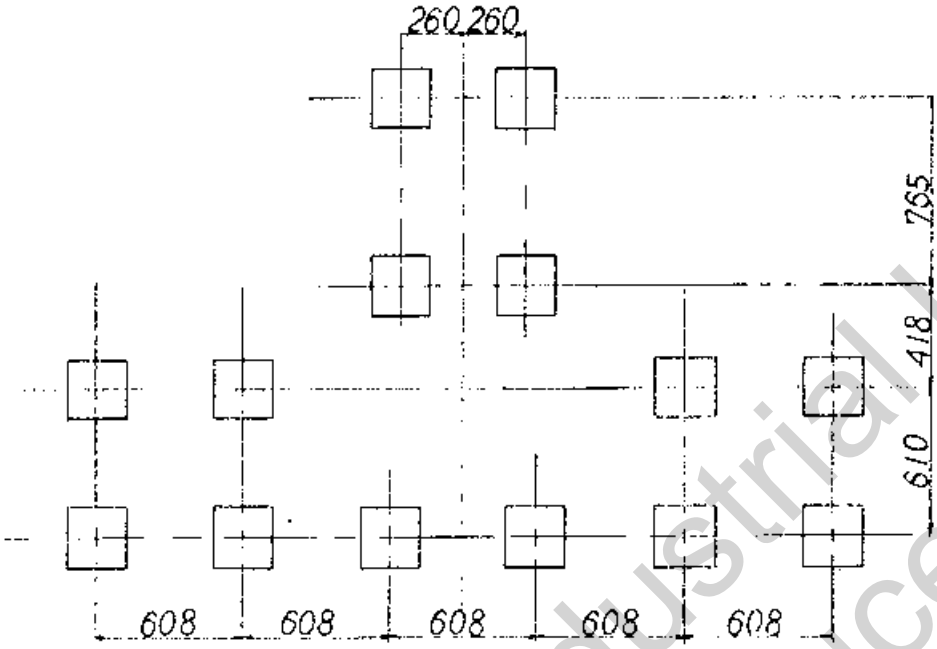

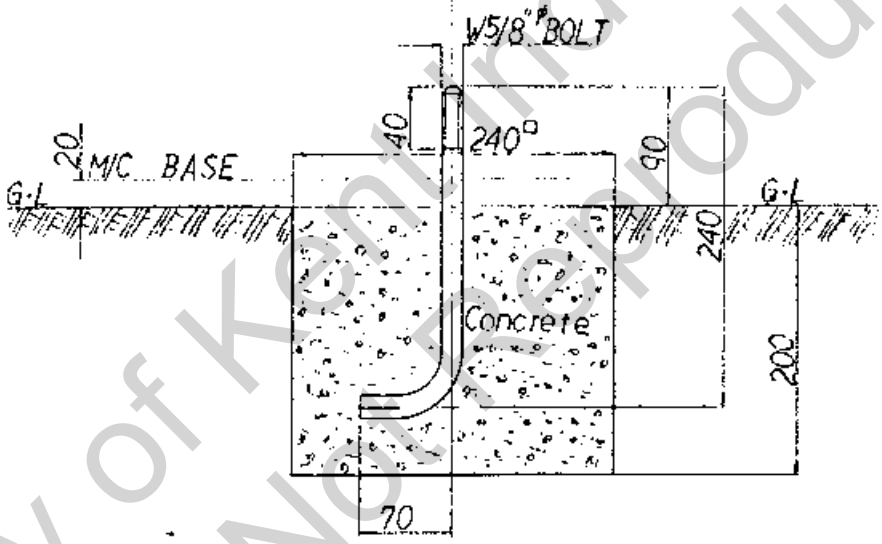

b. Use the levelling pads and screws

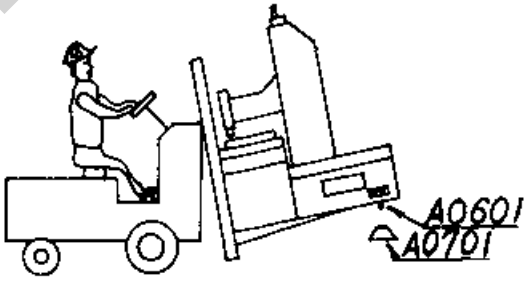

Property of Kent Industrial USA
Do Not Reproduce

* Screw the levelling screws (A0601) on the machine base with 2 nuts. For easy levelling and more steady of the machine , make screws as deep as possible.
* Lay down the machine slowly, to let the round head of levelling screws fall into the center hole of levelling pad (A0701).
* Levelling the machine.

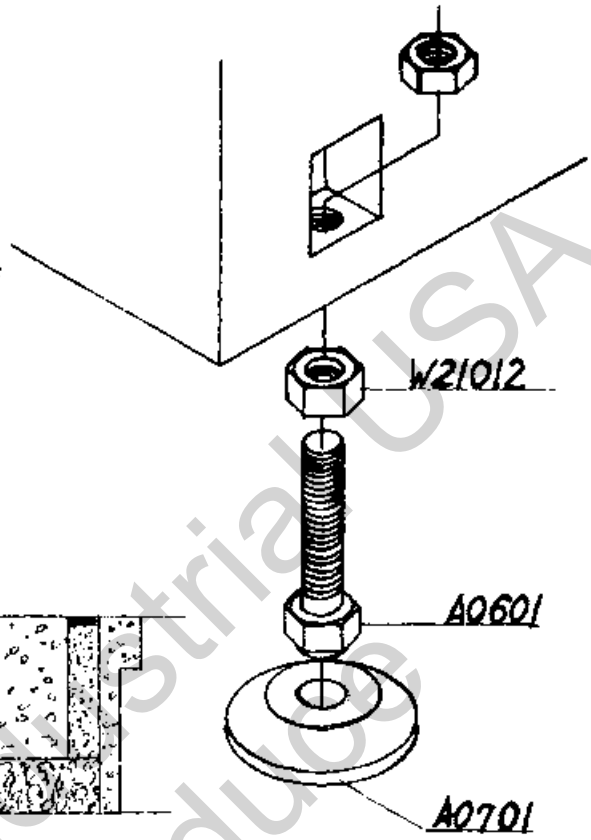

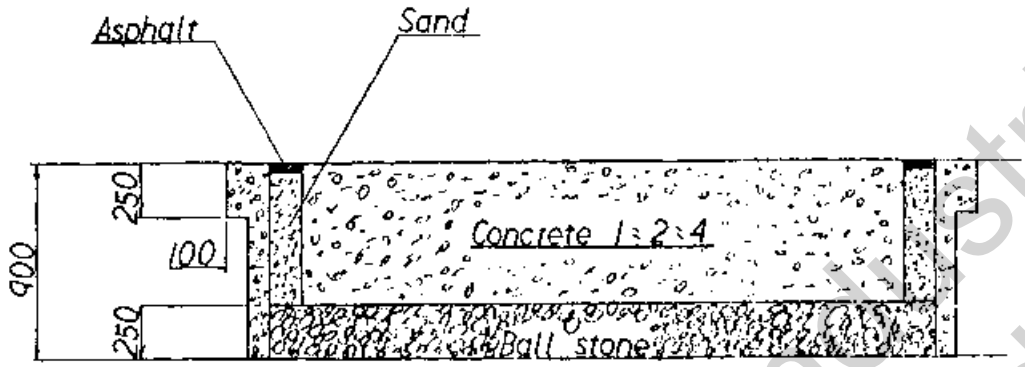

(3). Levelling the machine

As following procedures:

1. Use longitudinal handwheel to let table at the middle position.
2. Levelling the machine by a Spirit Level in longitudinal and latitudinal position.

In this case, we suggest:

a. Screwing up the levelling bolts #1,3,4,7,8, and adjust machine's levelling by use bolts #2,5,6,9, only. (Fig. A) .

b. After levelled, then drive table to the left end and adjust levelling bolts #1,7,8, (Fig. B).

c. Drive table to the right end and adjust levelling bolts #3,4, (Fig. C,D)

d. Drive table back to the middle position and re-check.

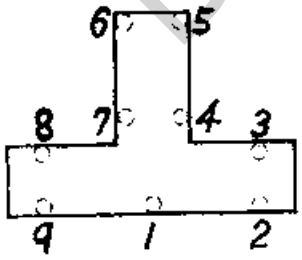

Fig. A

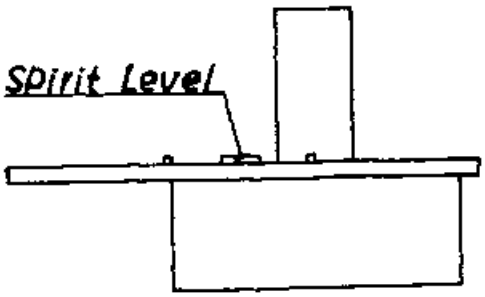

Fig. B

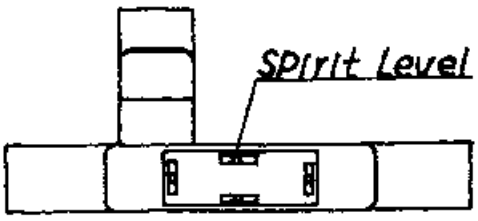

Fig. C

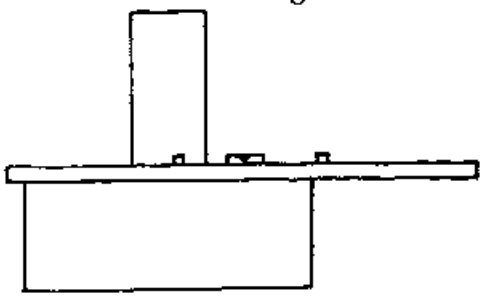

Fig. D

Property of Kent Industrial USA
Do Not Reproduce

(4). Contour and Nomenclature

a. KGS-410AH

KGS-410AH CONTOUR AND NOMENCLATURE

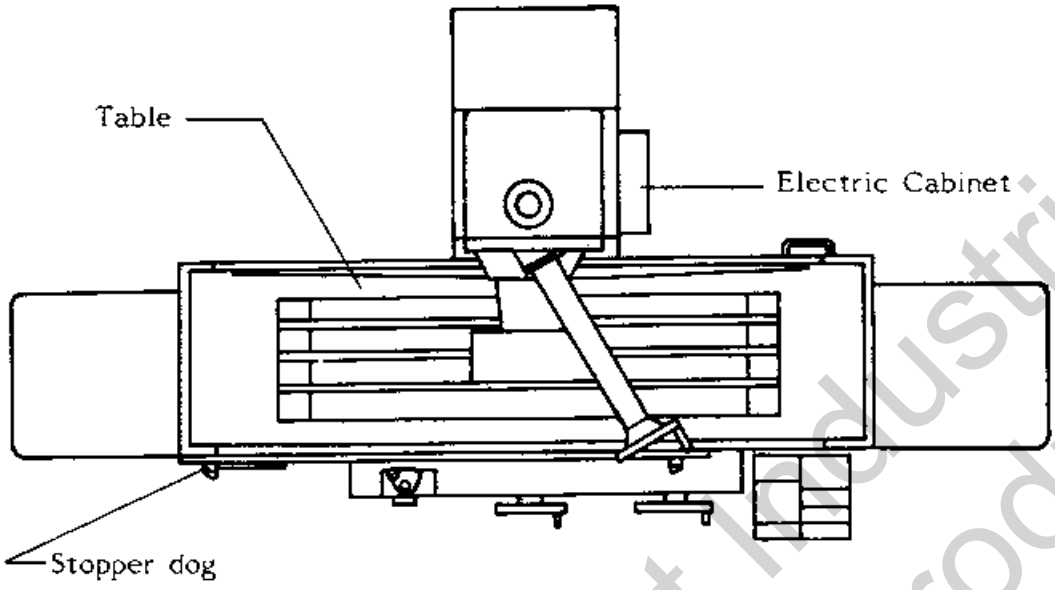

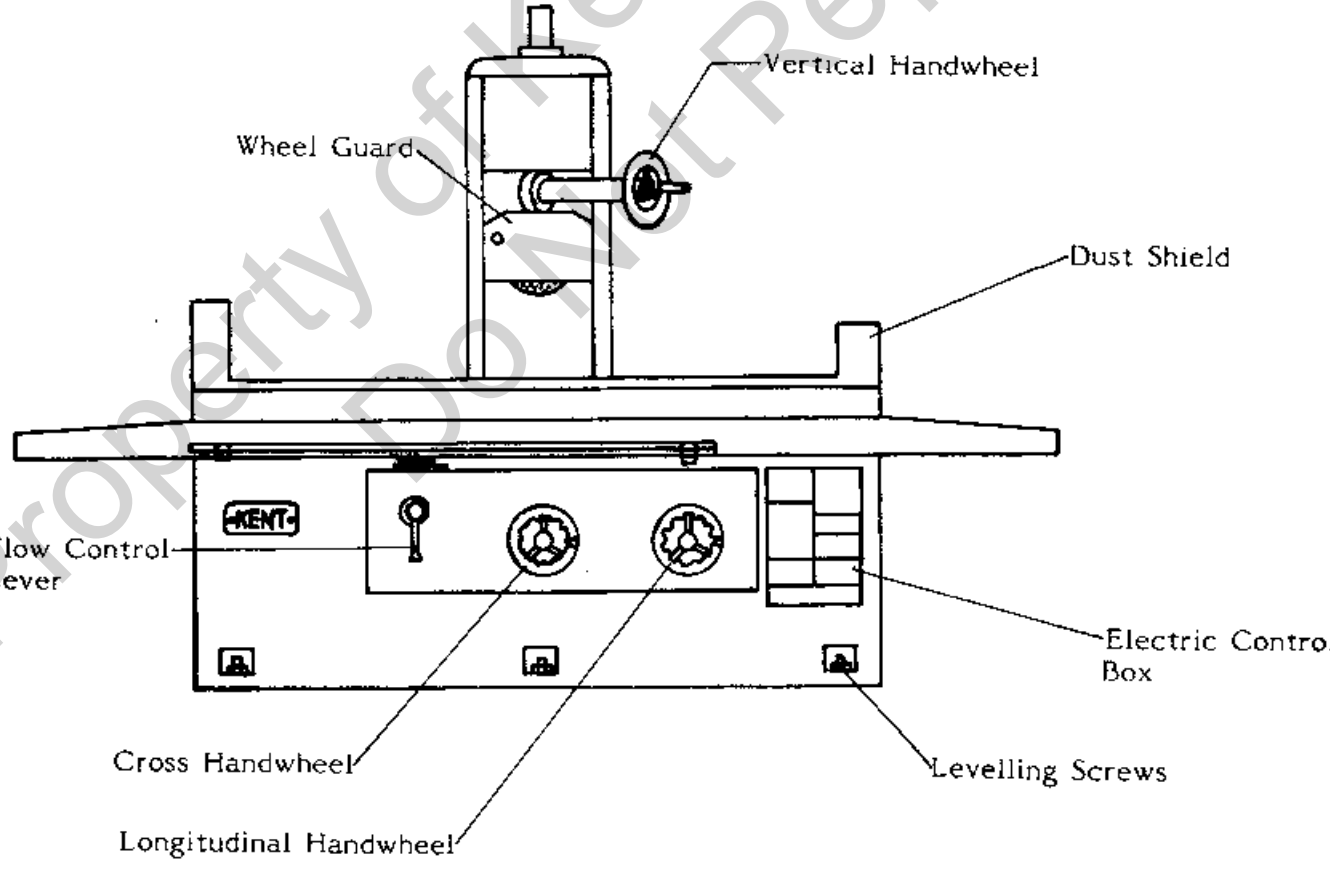

Property of Kent Industrial USA
Do Not Reproduce

b. KGS-410AHD

KGS-410AHD CONTOUR AND NOMENCLATURE

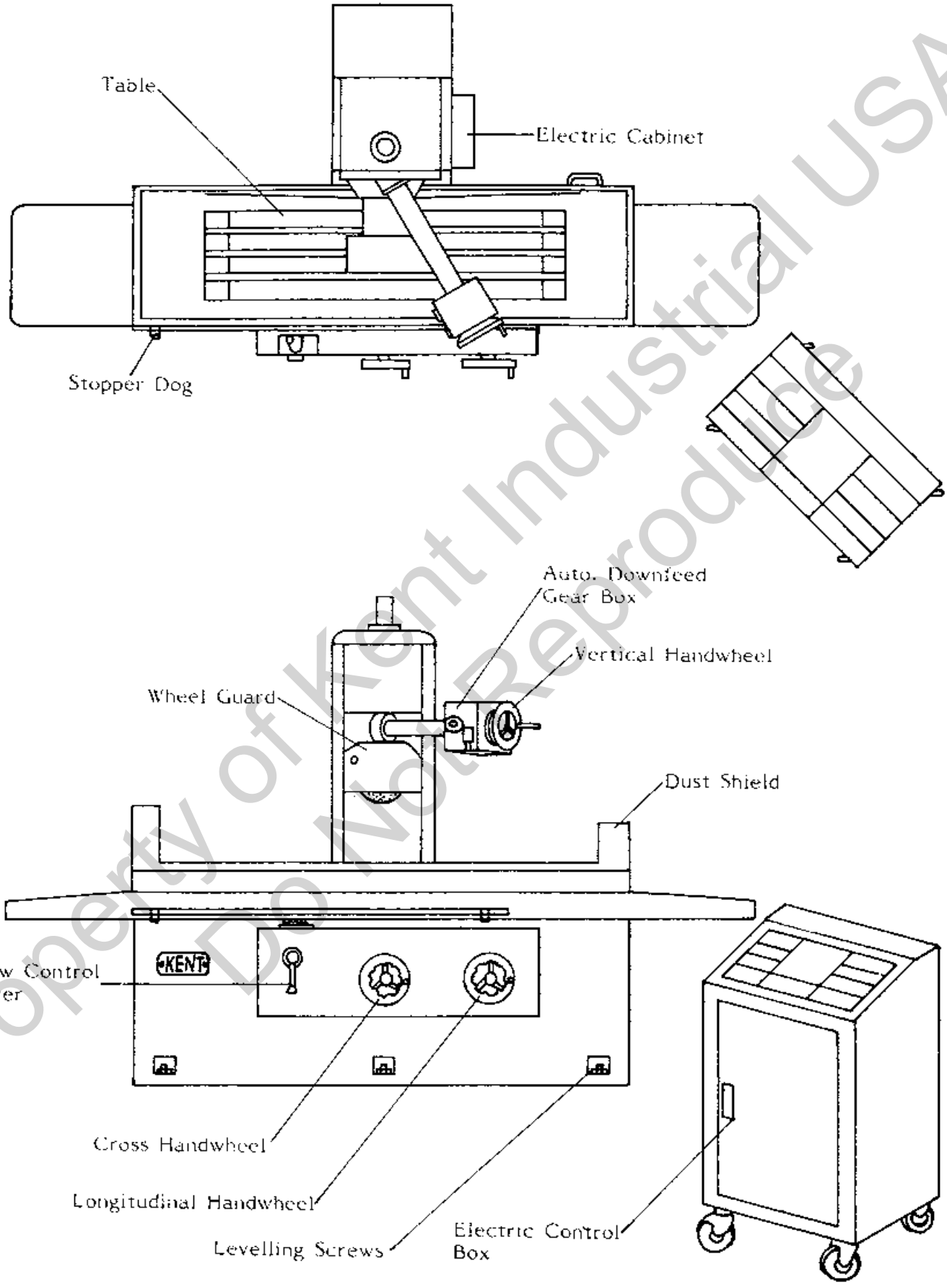

Property of Kent Industrial USA
Do Not Reproduce

c. KGS-515AH

KGS-515AH CONTOUR AND NOMENCLATURE

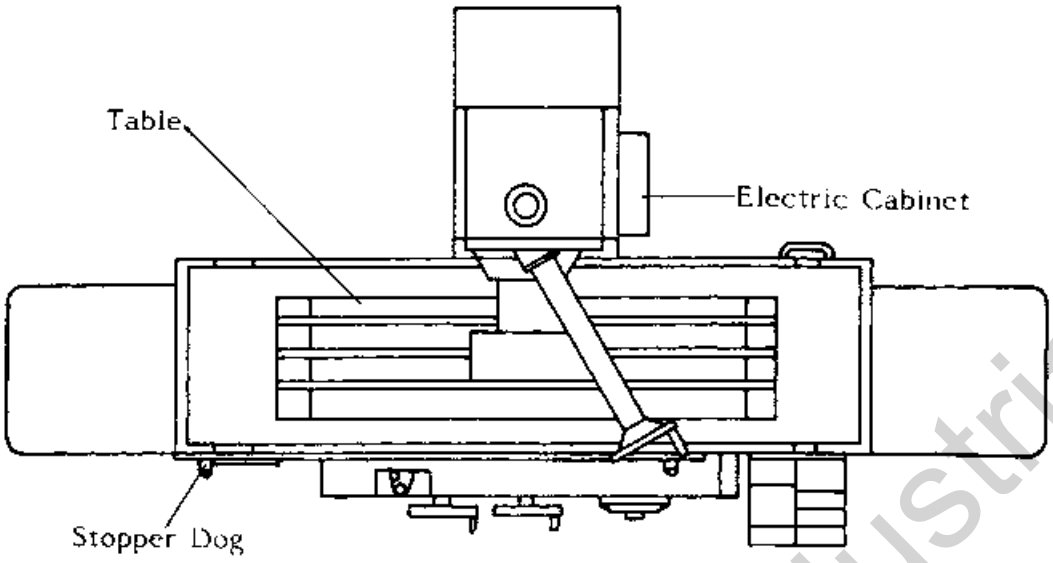

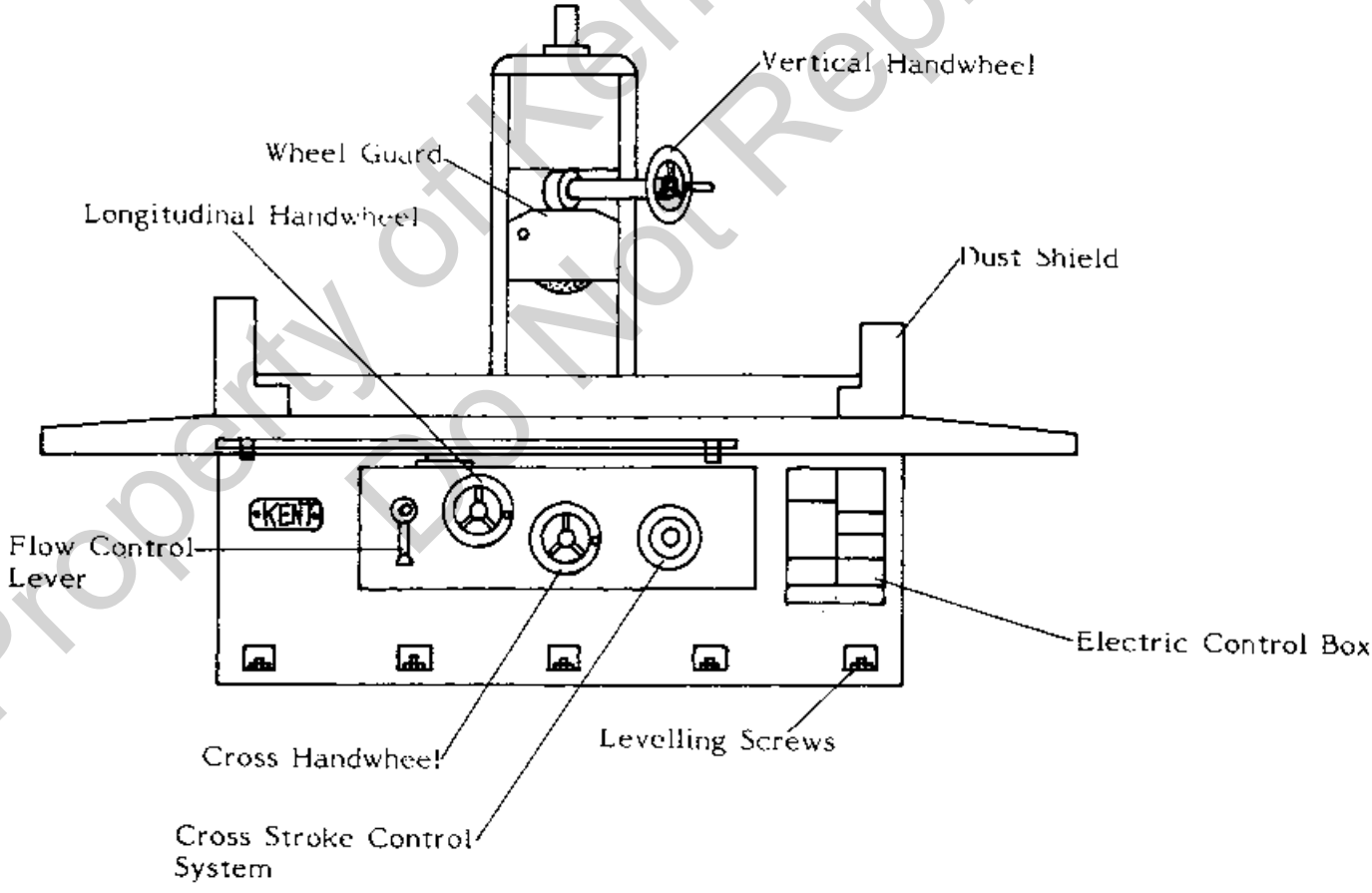

Property of Kent Industrial USA
Do Not Reproduce

d. KGS-515AHD

KGS-515AHD CONTOUR AND NOMENCLATURE

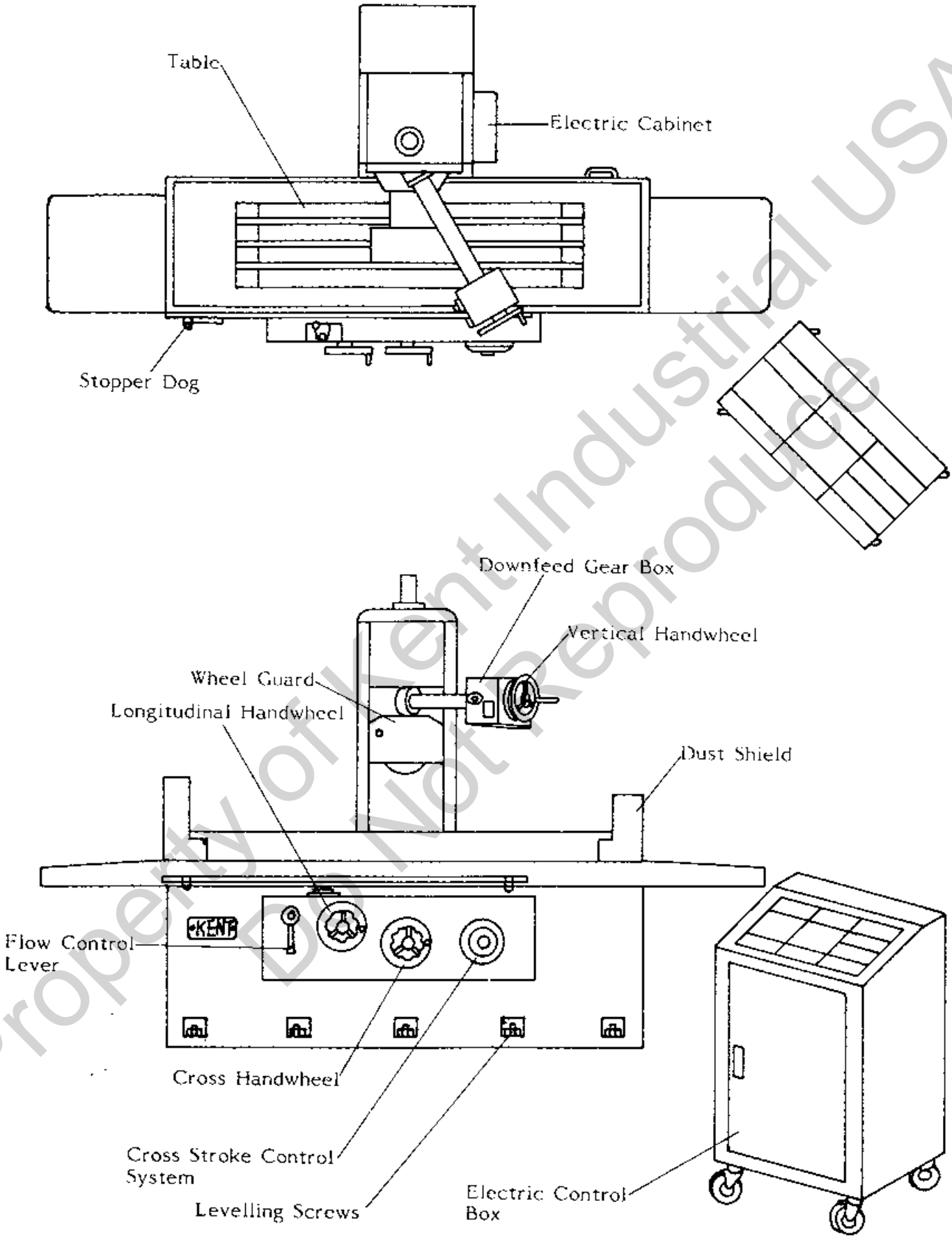

Property of Kent Industrial USA
Do Not Reproduce

e. KGS-620AH

KGS-620AH CONTOUR AND NOMENCLATURE

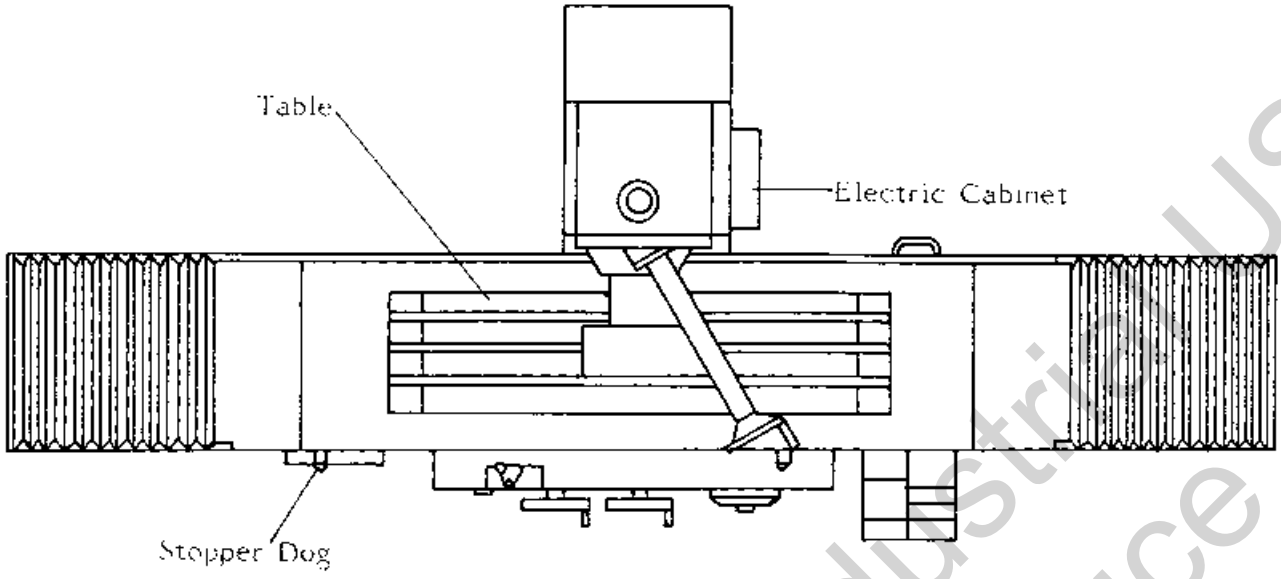

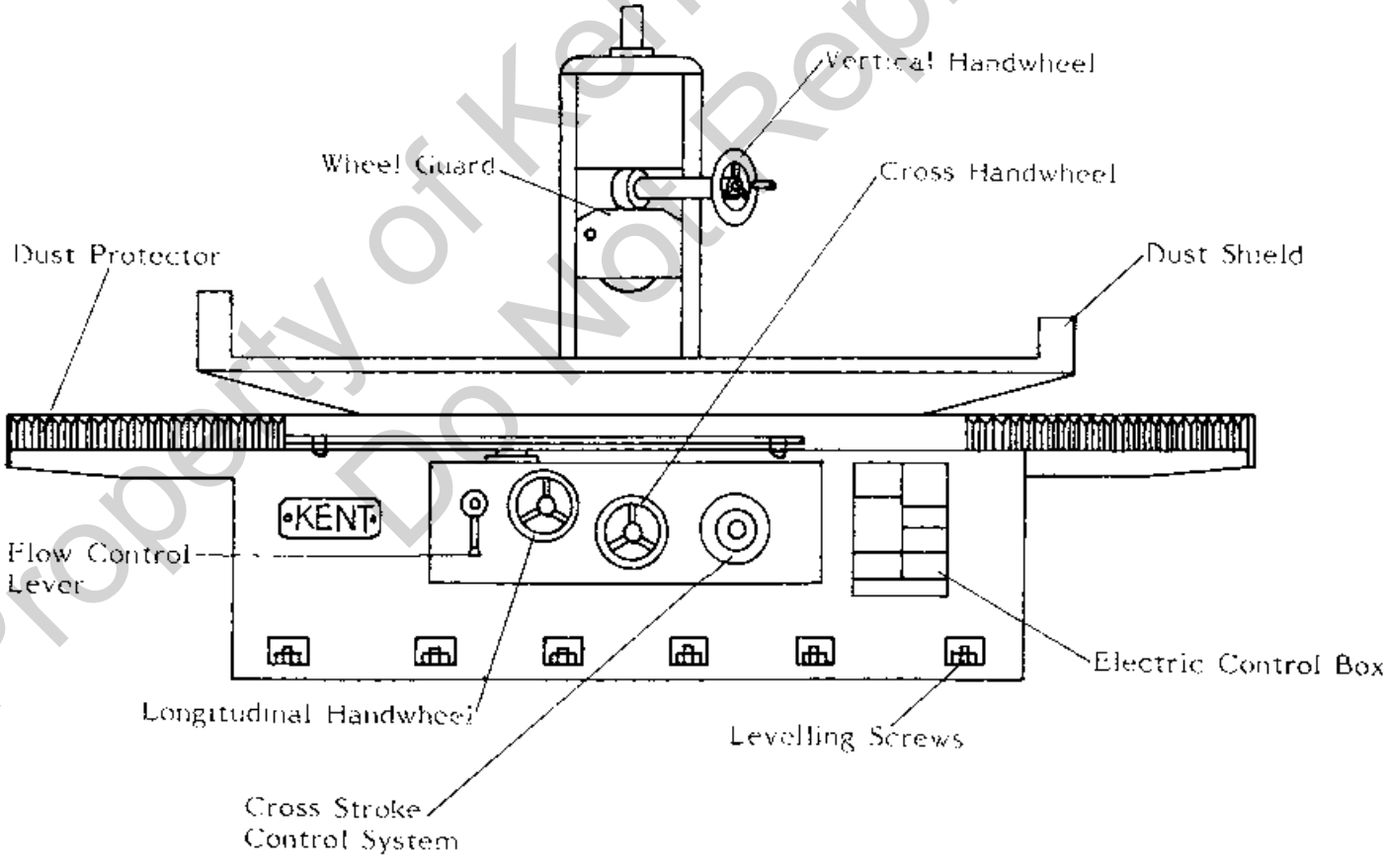

Property of Kent Industrial USA
Do Not Reproduce

f. KGS-620AHD

KGS-620AHD CONTOUR AND NOMENCLATURE

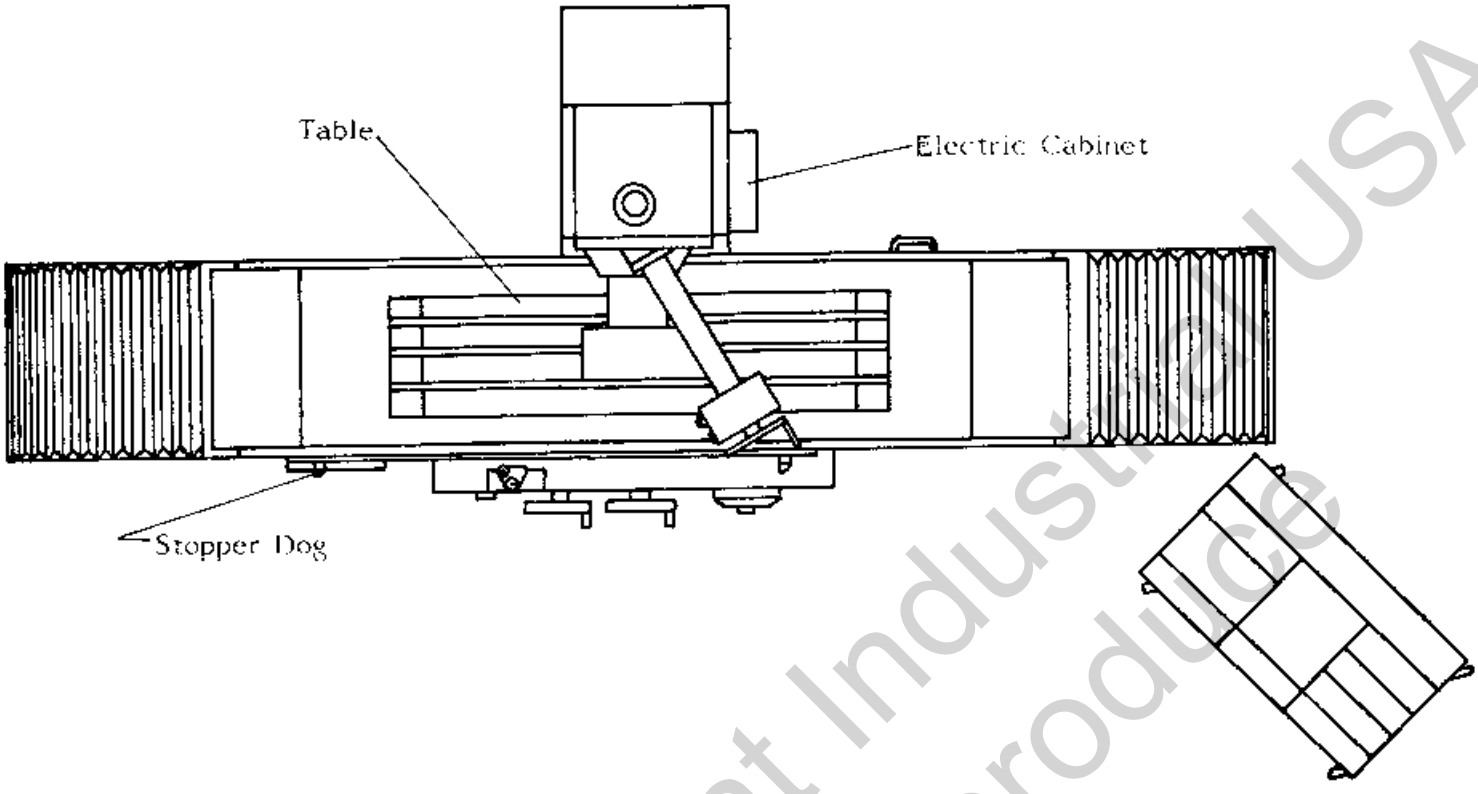

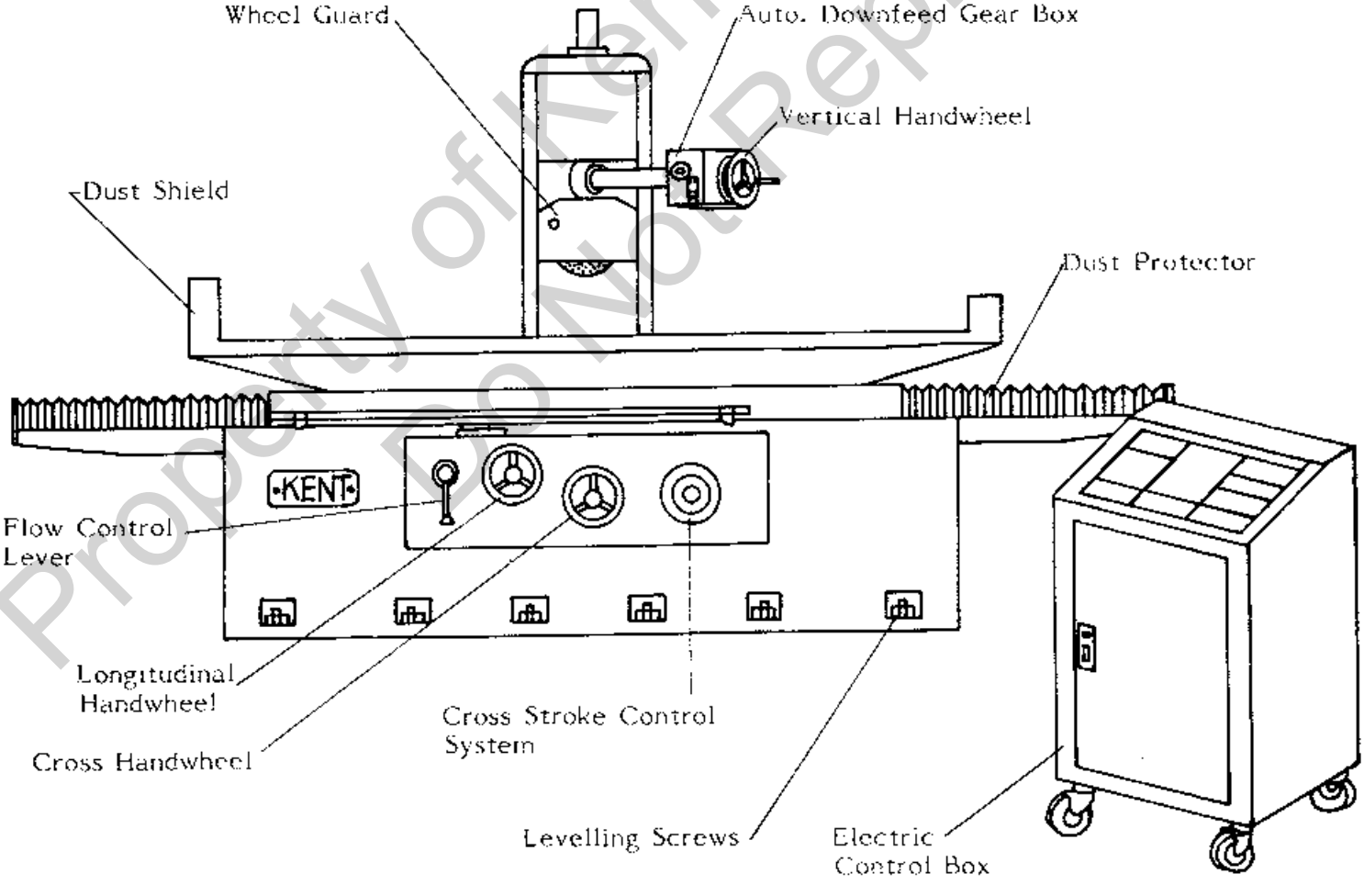

Property of Kent Industrial USA
Do Not Reproduce

(5). Table size and grinding capacity

a. KGS-410AH(AHD)

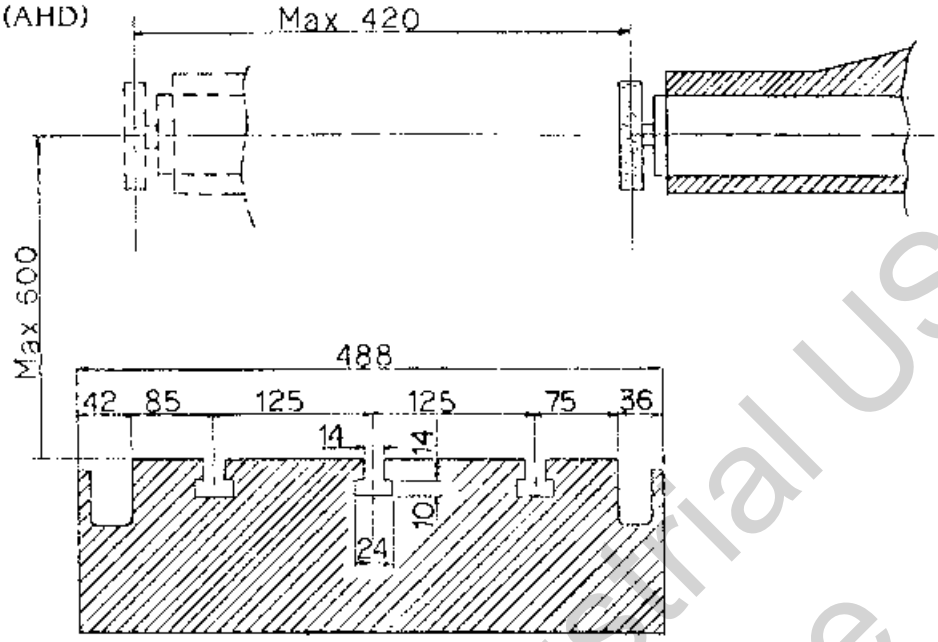

b. KGS-515AH(AHD)

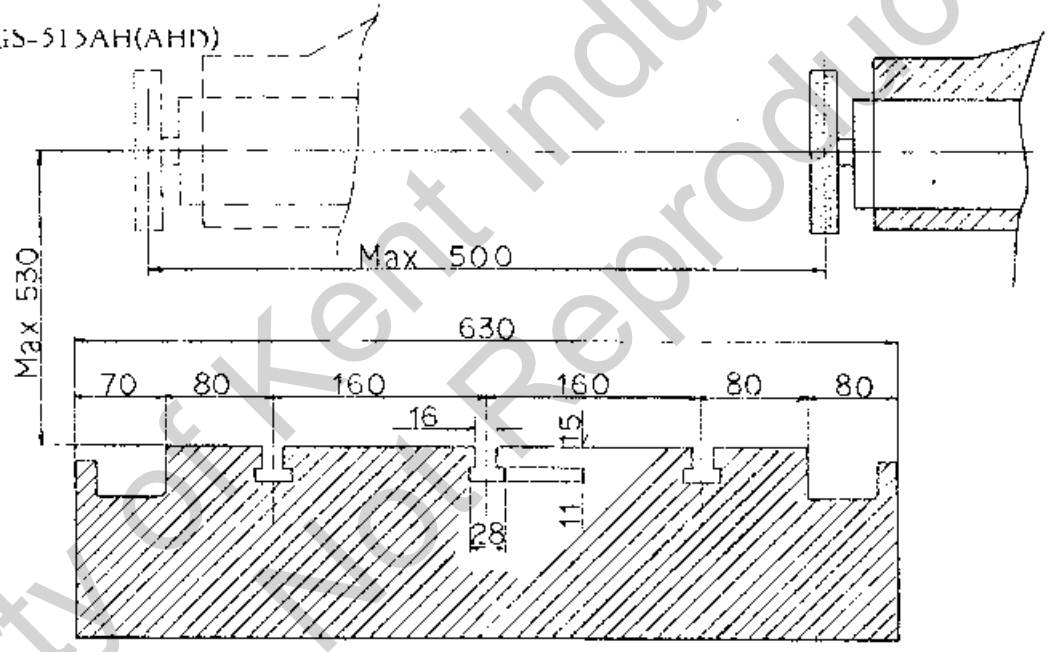

c. KGS-620AH(AHD)

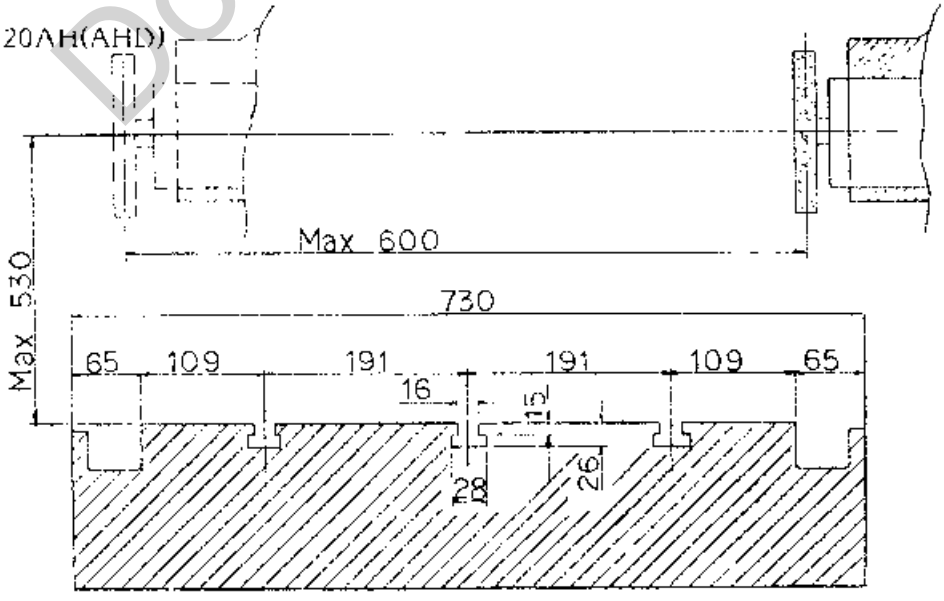

Property of Kent Industrial USA
Do Not Reproduce

(6). Lubrication Instruction

a. KGS-410AH, 410AHD LUBRICATION DIAGRAM

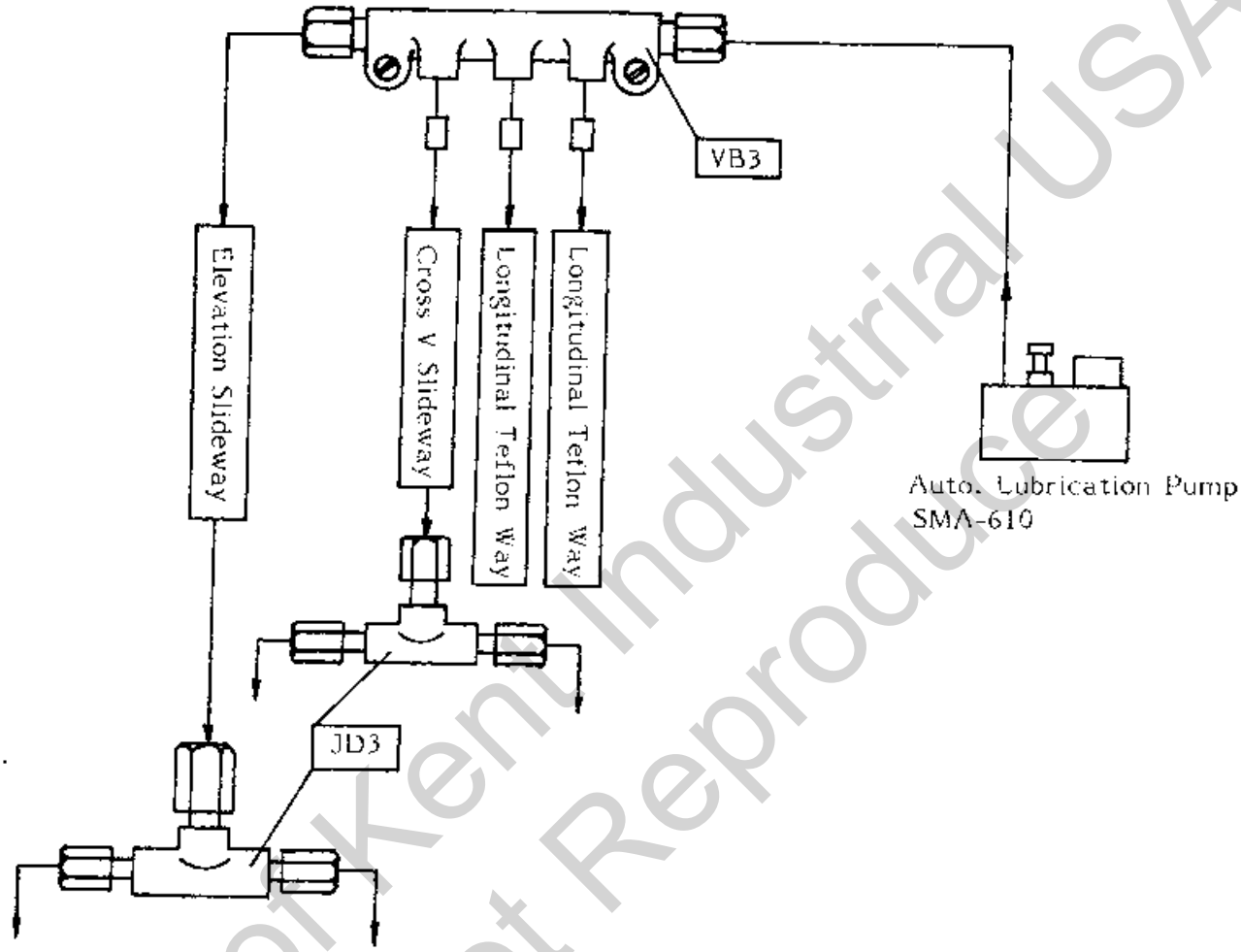

Reliability of the machine and economic running are ensured only by the correct choice of lubricant for the individual lubricating points.

(1) Lubrication Pump: Auto. lubrication pump will be operated when machine power is ON, then pumps 3-6 cc (Adjustable) in every 10 minutes.

(2) Lubricant: SAE30, lubrication oil of BP, ESSO, MOBIL or SHELL.

(3) Lubricant tank: 1.5 liters

(4) Lubricating points: By auto. lubrication pump:

a). Longitudinal teflon ways (between table and machine base)

b). Cross teflon ways (between column and machine base)

c). Elevation guideways

By grease:

d). Cross leadscrew and nut

e). Vertical leadscrew and nut

Property of Kent Industrial USA
Do Not Reproduce

b. KGS-515AH, 515AHD, 620AH, 620AHD Lubrication Diagram

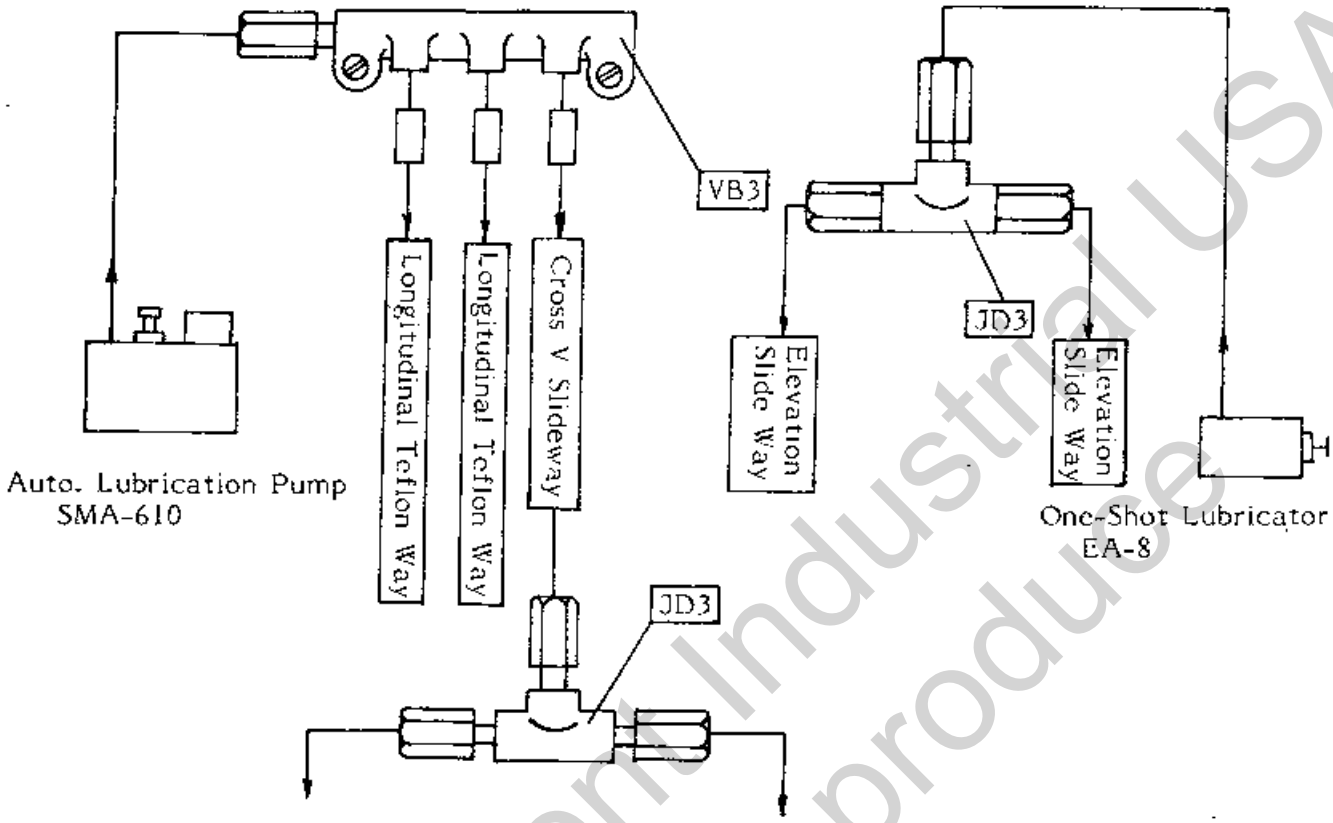

Reliability of the machine and economic running are ensured only by the correct choice of lubricant for the individual lubricating points.

(1). Lubrication pump: Auto. lubrication pump will be operated when machine power is ON, then pumps 3-6cc (Adjustable) in every 10 minutes.

One-shot lubricator: Operated by hand, 8cc each time.

(2). Lubricant: SAE30, lubrication oil of BP, ESSO, MOBIL or SHELL etc.

(3). Lubricant tank: Auto. lubrication pump: 1.5 liters

One-Shot lubricator: 0.5 liters

(4). Lubricating points: By auto. lubrication pump:

a). Cross double V Teflon ways,

b). Longitudinal Teflon ways,

By one-shot lubricator:

c). Elevation guideways,

By grease gun

d). Cross leadscrew and nut,

e). Vertical leadscrew and nut.

Property of Kent Industrial USA
Do Not Reproduce

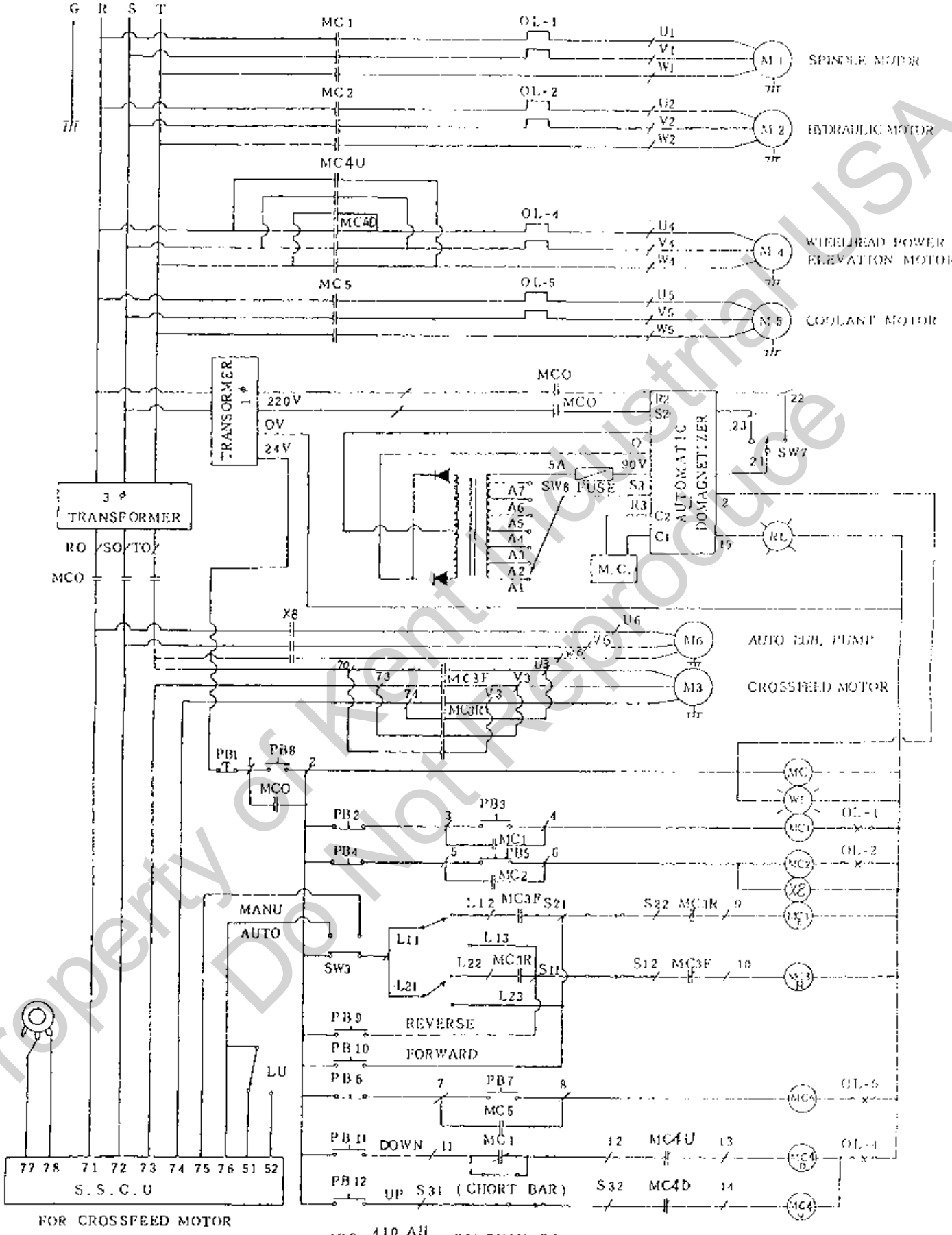

KGS-410 AH
515 AH CIRCUIT DIAGRAM

Property of Kent Industrial USA
Do Not Reproduce

Description:

M1 : Wheel spindle motor

M2 : Hydraulic motor

M3 : Column cross feed motor

M4 : Wheel elevation motor

M5 : Coolant pump

M6 : Auto. lubrication pump

S.S.C.U. : Solid state control unit for cross feed motor M3

MC0 : Magnetic contactor of power source

MC1 : Magnetic contactor of spindle motor

MC2 : Magnetic contactor of hydraulic motor

MC3 : Magnetic contactor of cross feed motor, Forward

MC4 : Magnetic contactor of cross feed motor, Backward

MCU : Magnetic contactor of wheel elevation motor, Upward

MCD : Magnetic contactor of wheel elevation motor, Downward

MC5 : Magnetic contactor of coolant pump

3-PH. TR.: 3-phase transformer, input subject to your power source (in U. S. A. area 220V/440V contantly), output 210V for M3, M5 and S. S. C. U. of cross feed controller.

1-PH.TR.: single-phase transformer, input subject to your power source, output for electric control panel, auto. demagnetizer, electric magnetic chuck and auto. lubrication pump.

Note

Wheel spindle motor, Hydraulic motor, Wheel elevation motor, Input of 3-phase transformer and Input of single-phase transformer must be complied with your local power.

Note

Safety circuit for grinding wheel power elevation, the operator must turn off the grinding wheel motor before push PB11 (wheel power elevation downward). But in this machine, we use a "SHORT BAR" to negate this function. If you need, the safety circuit will be effected when you take off the "SHORT BAR".

Property of Kent Industrial USA
Do Not Reproduce

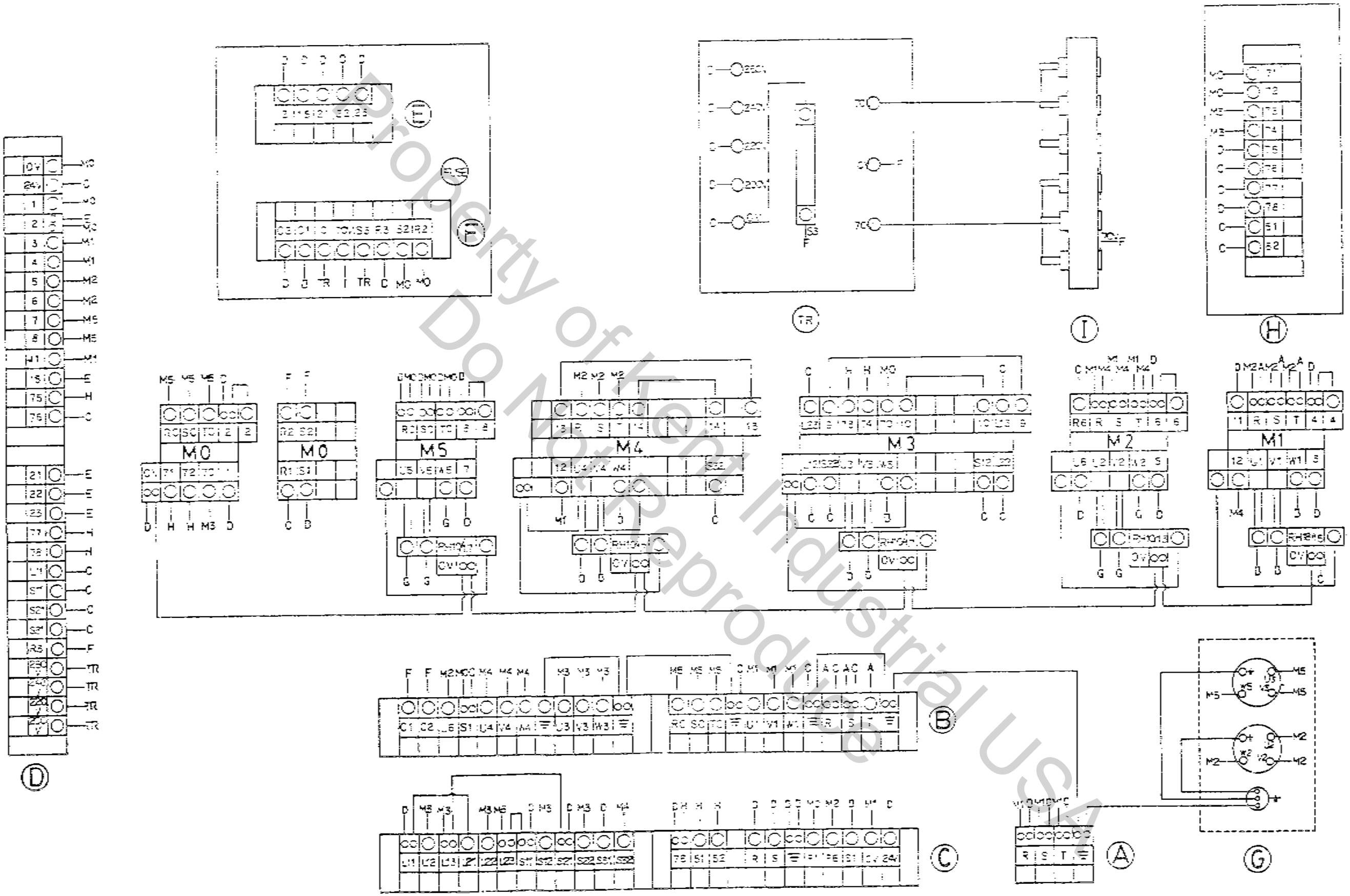

KGS-410AH, 513AH, 620AH (EG4122)

Property of Kent Industrial USA
Do Not Reproduce

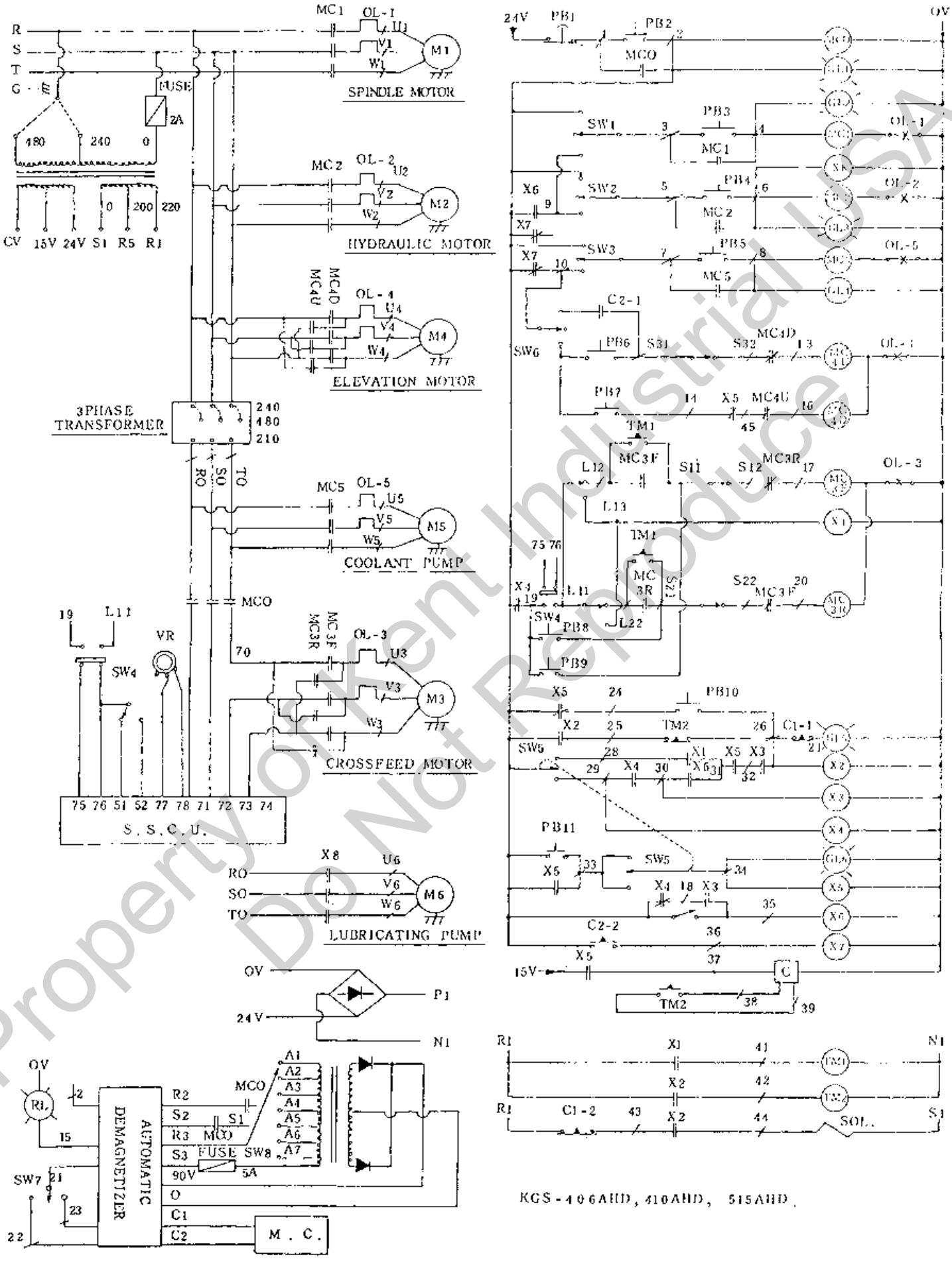

Property of Kent Industrial USA
Do Not Reproduce

Description:

M1	: Wheel spindle motor
M2	: Hydraulic Motor
M3	: Column cross feed motor
M4	: Wheel elevation motor
M5	: Coolant pump
M6	: Auto. lubrication pump
S.S.C.U.	: Solid state control unit for cross feed motor M3
MC0	: Magnetic contactor of power source
MC1	: Magnetic contactor of spindle motor
MC2	: Magnetic contactor of hydraulic motor
MC3F	: Magnetic contactor of cross feed motor, Forward
MC3R	: Magnetic contactor of cross feed motor, Backward
MC4U	: Magnetic contactor of wheel elevation motor, Upward
MC4D	: Magnetic contactor of wheel elevation motor, Downward
MC5	: Magnetic contactor of coolant pump
X1	: Relay for cross feed reverse & down feed when surface grinding
X2	: Relay for down feed solenoid
X3	: Relay for down feed signal
X4	: Relay for plunge grinding signal & circuit lock for cross feed when plunge grinding
X5	: Relay for auto. down feed cycle start
X6	: Relay for down feed at right side of work piece
X7	: Relay for auto. down feed cycle end
TM1	: Preset timer of cross feed reverse time
TM2	: Preset timer of down feed cylinder action time
	: Bridge rectifier, to supply power for TM1 and TM2
SOL .	: Solenoid valve for down feed function
3-PH TR.	: 3-phase transformer, input subject to your power source (in U. S. A. area 220V/440V constantly), output 210V for M3, M5 and S. S. C. U. of cross feed controller
1-PH TR.	: Single phase transformer, input subject to your power source, output for electric control panel, solenoid valve, auto. demagnetizer, electric magnetic chuck and auto. lubrication pump.

Note

Wheel spindle motor, Hydraulic motor, Wheel elevation motor, Input of 3-phase transformer and Input of single-phase transformer must be complied with your local power.

Property of Kent Industrial USA
Do Not Reproduce

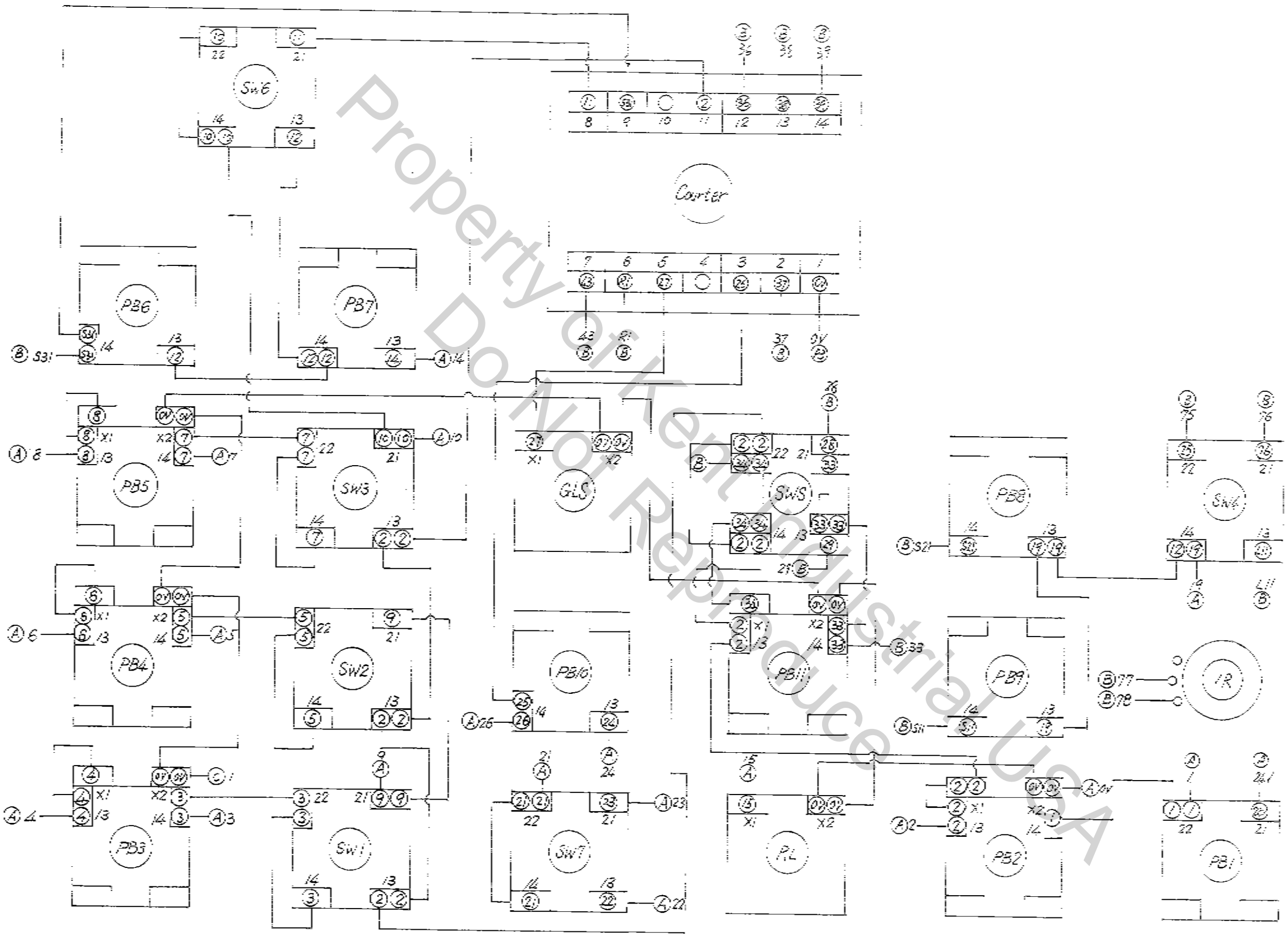

Property of Kentucky Department of Industrial Use
Do Not Reproduce

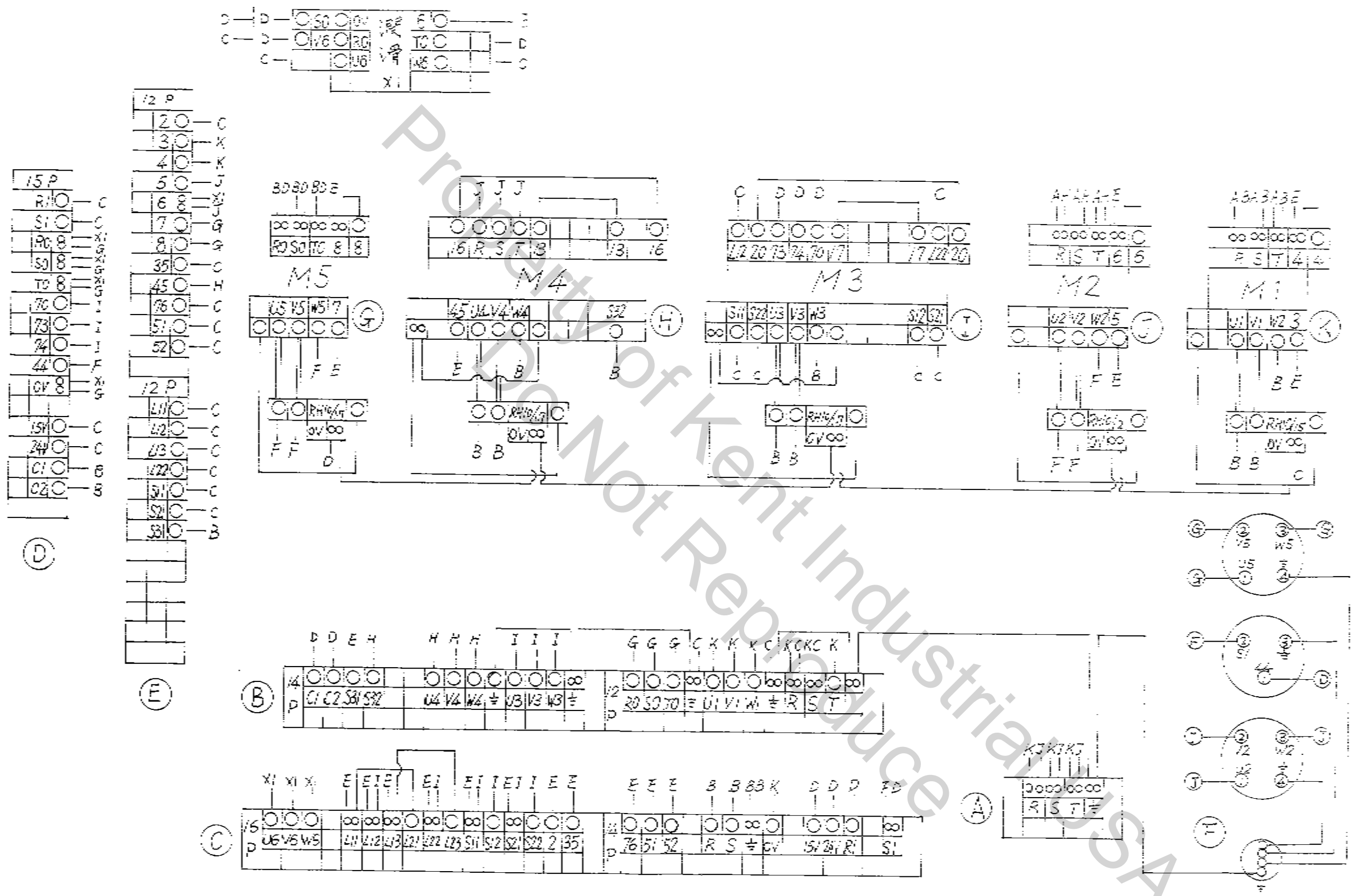

Property of Kent Industrial USA
Do Not Reproduce

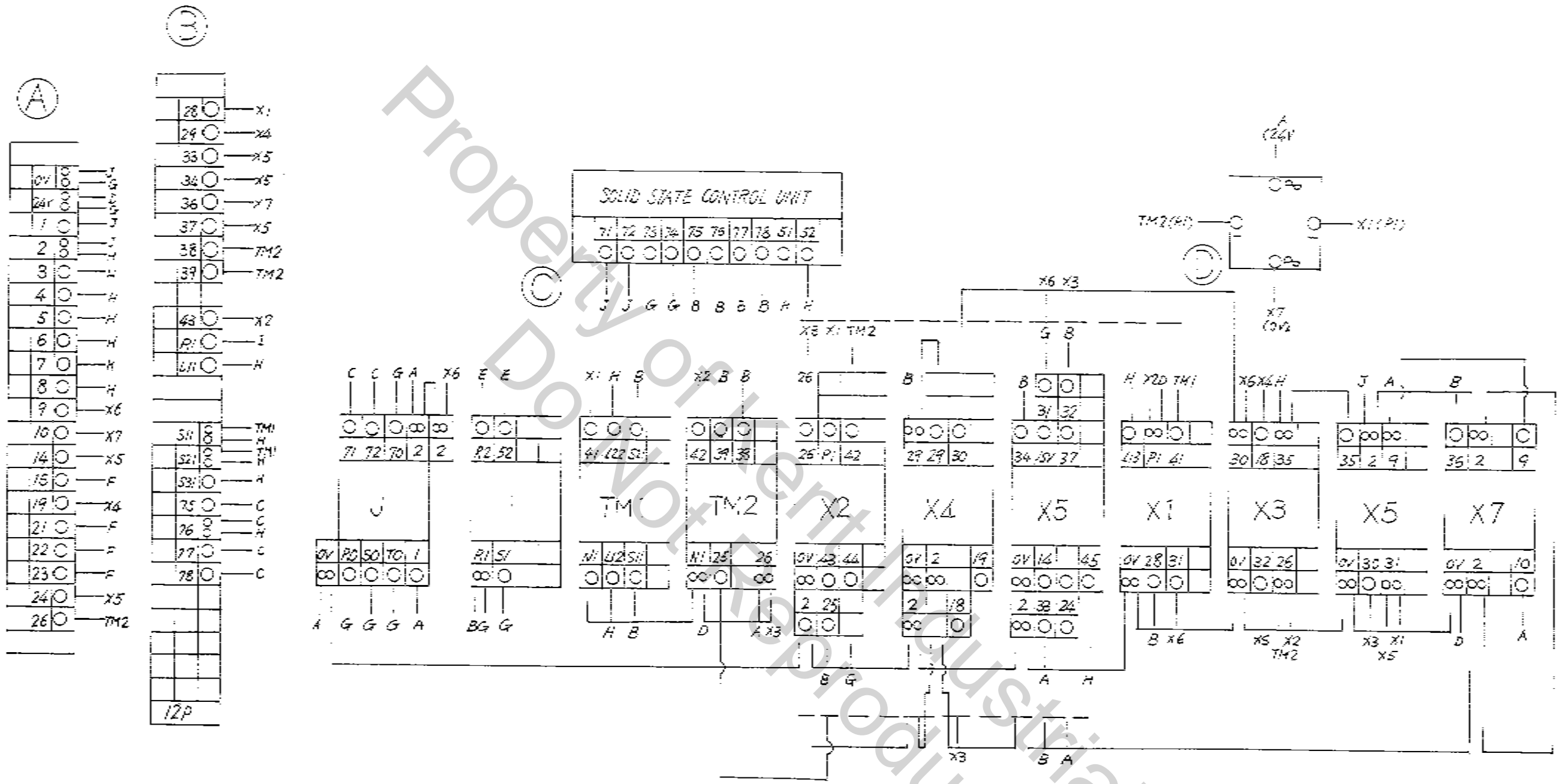

KGS-406, 410.515 A4D(2)

Property of Heart Industrial USA
Do Not Reproduce

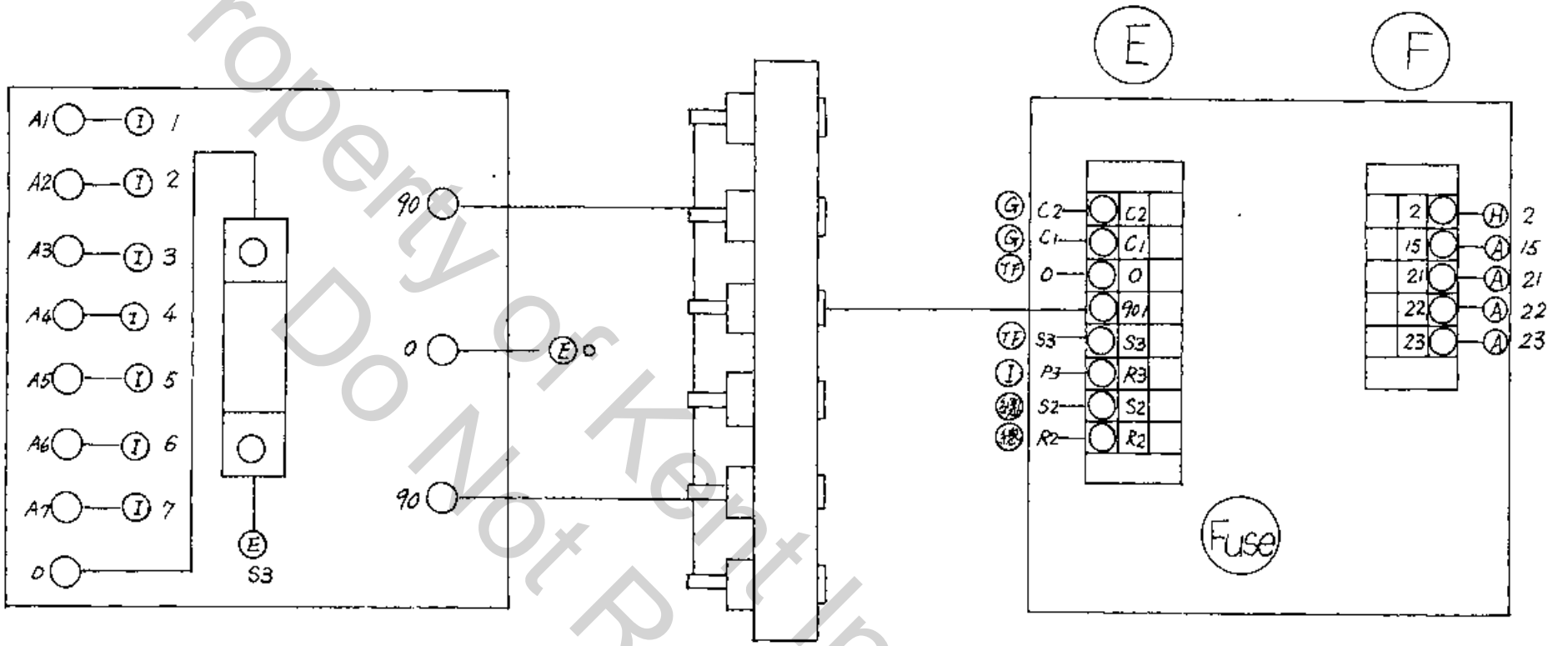

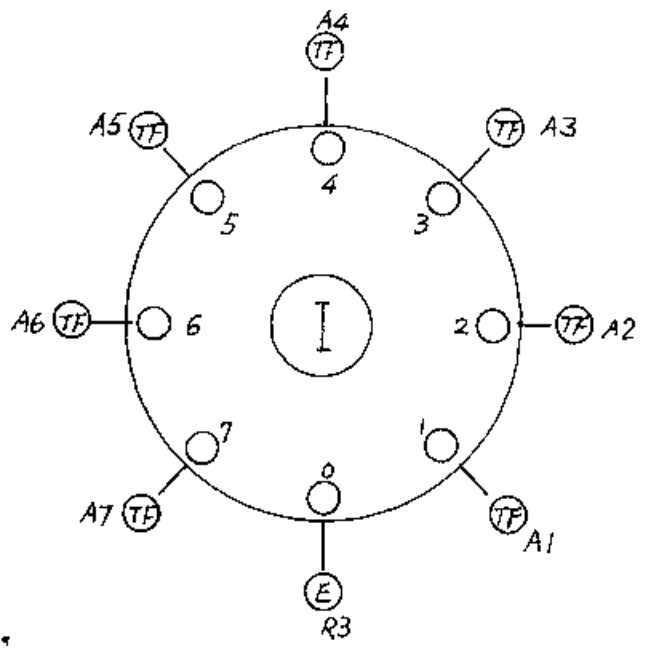

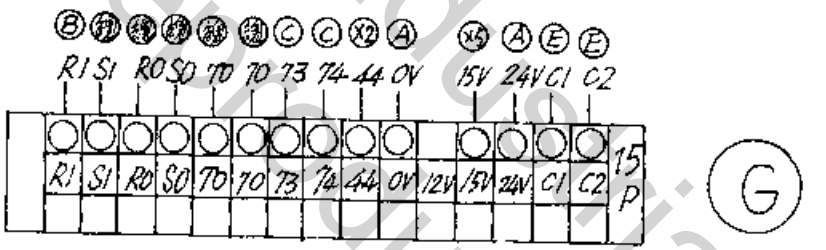

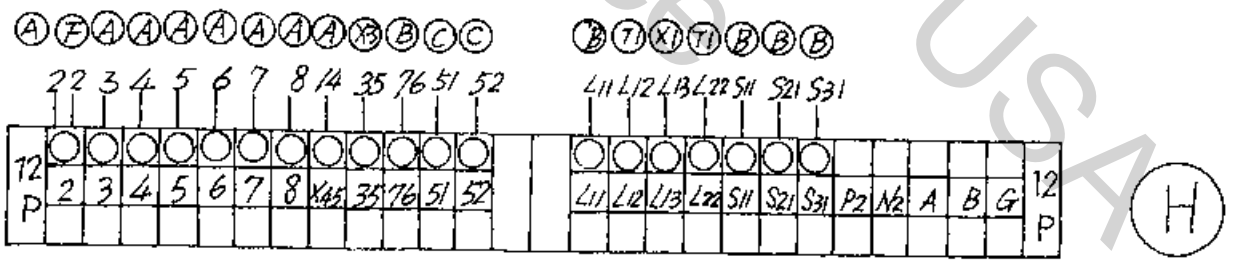

Property of Kent Industrial USA
Do Not Reproduce

(8). Hydraulic System

a. KGS-410AH

KGS-410AH HYDRAULIC DIAGRAM

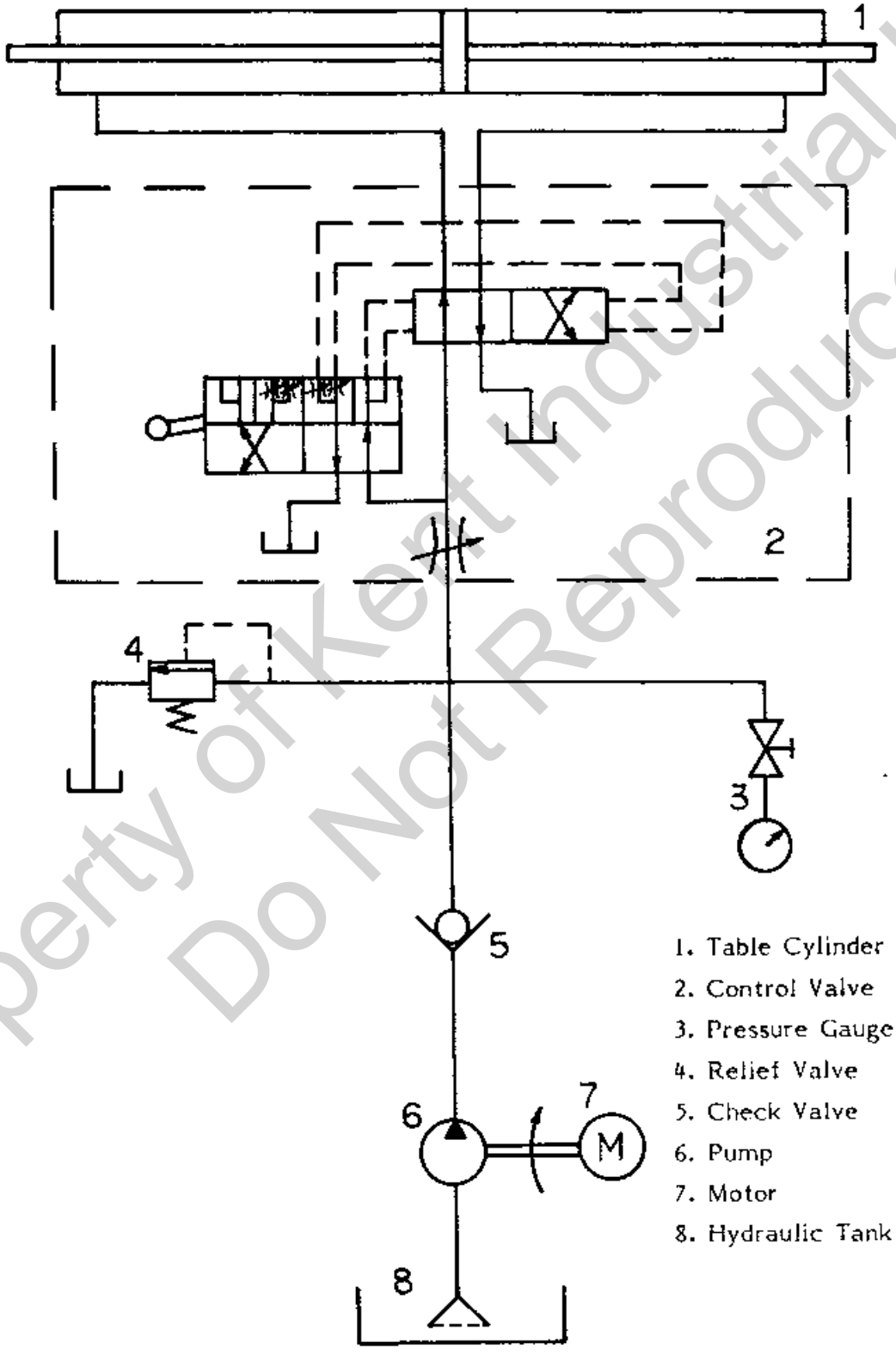

Property of Kent Industrial USA
Do Not Reproduce

b. KGS-410AHD

KGS-410AHD HYDRAULIC DIAGRAM

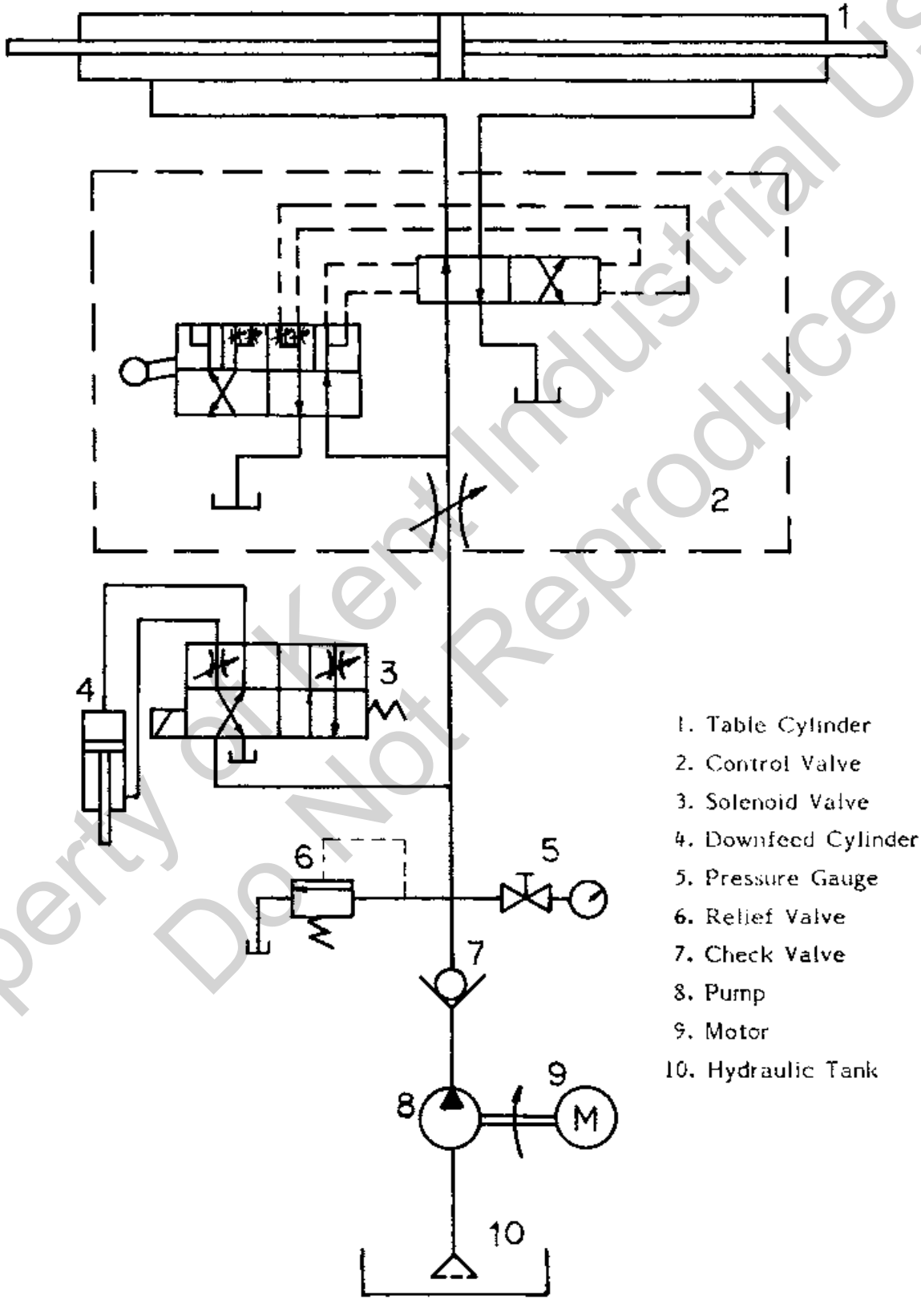

Property of Kent Industrial USA
Do Not Reproduce

c. KGS-515AH

KGS-515AH HYDRAULIC DIAGRAM

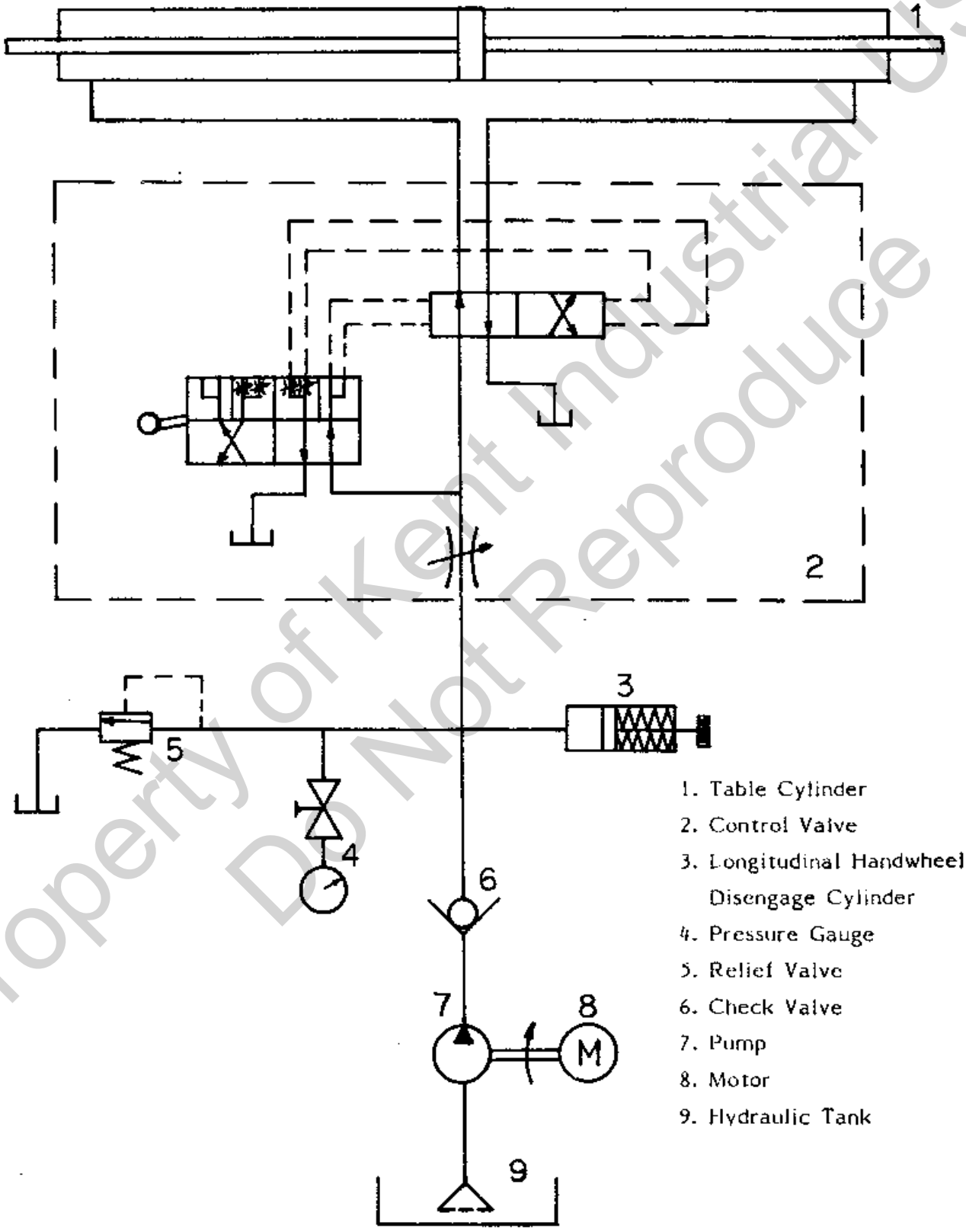

1. Table Cylinder
2. Control Valve
3. Longitudinal Handwheel Disengage Cylinder
4. Pressure Gauge
5. Relief Valve
6. Check Valve
7. Pump
8. Motor
9. Hydraulic Tank

Property of Kent Industrial USA
Do Not Reproduce

d. KGS-515AHD

KGS-515AHD HYDRAULIC DIAGRAM

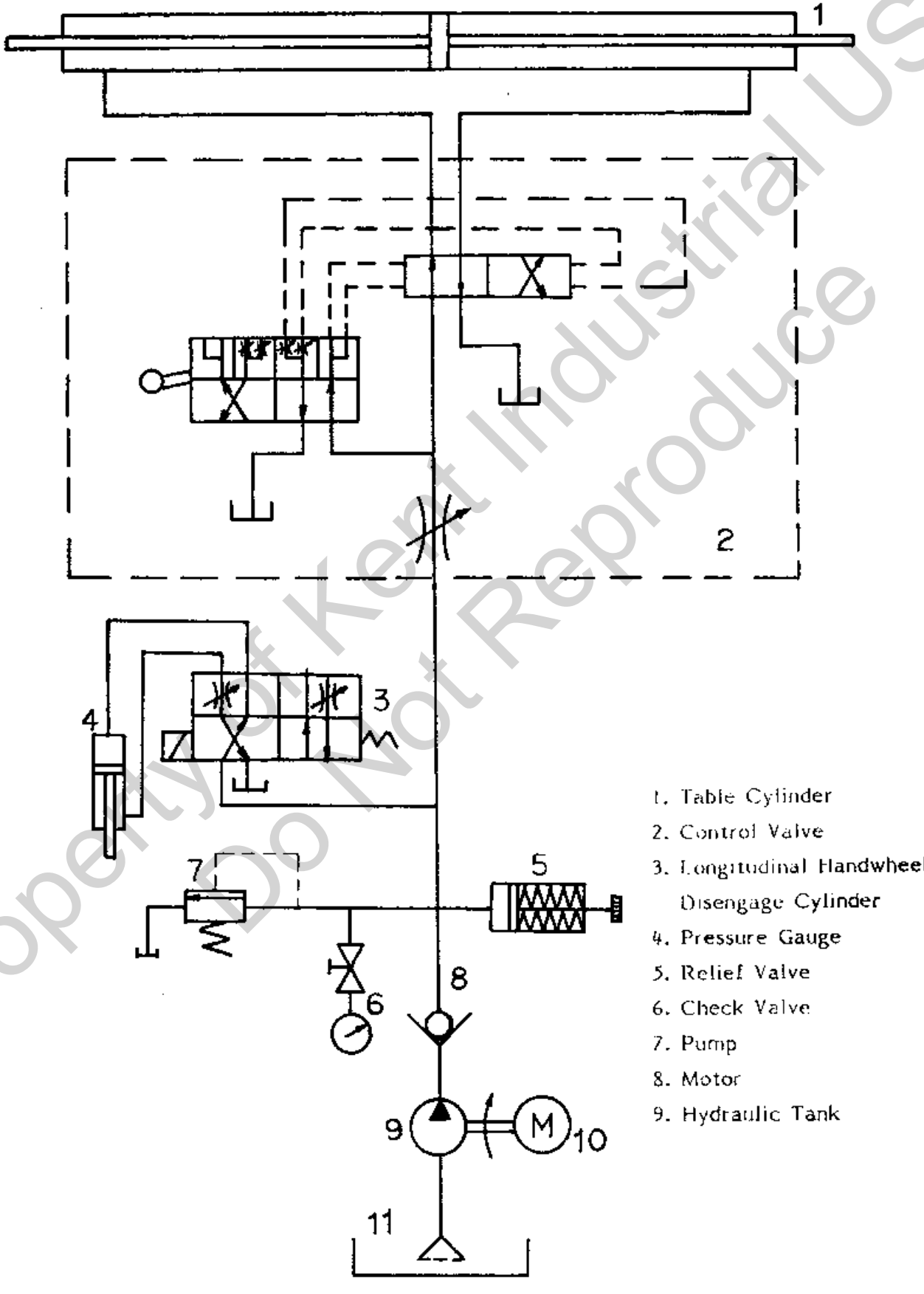

1. Table Cylinder
2. Control Valve
3. Longitudinal Handwheel Disengage Cylinder
4. Pressure Gauge
5. Relief Valve
6. Check Valve
7. Pump
8. Motor
9. Hydraulic Tank

Property of Kent Industrial USA
Do Not Reproduce

e. KGS-620AH

KGS-620AH HYDRAULIC DIAGRAM

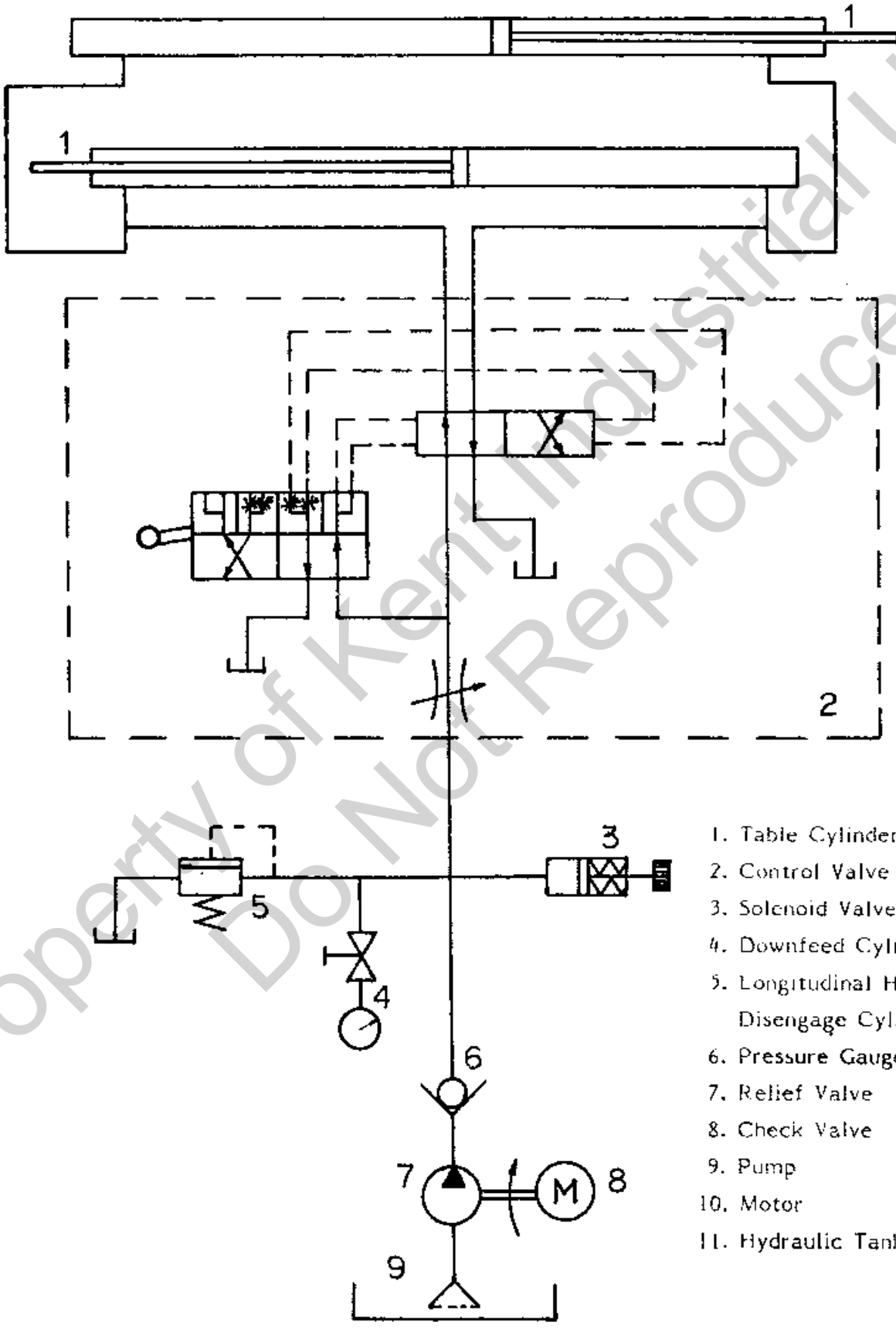

1. Table Cylinder
2. Control Valve
3. Solenoid Valve
4. Downfeed Cylinder
5. Longitudinal Handwheel Disengage Cylinder
6. Pressure Gauge
7. Relief Valve
8. Check Valve
9. Pump
10. Motor
11. Hydraulic Tank

Property of Kent Industrial USA
Do Not Reproduce

f. KGS-620AHD

KGS-620AHD HYDRAULIC DIAGRAM

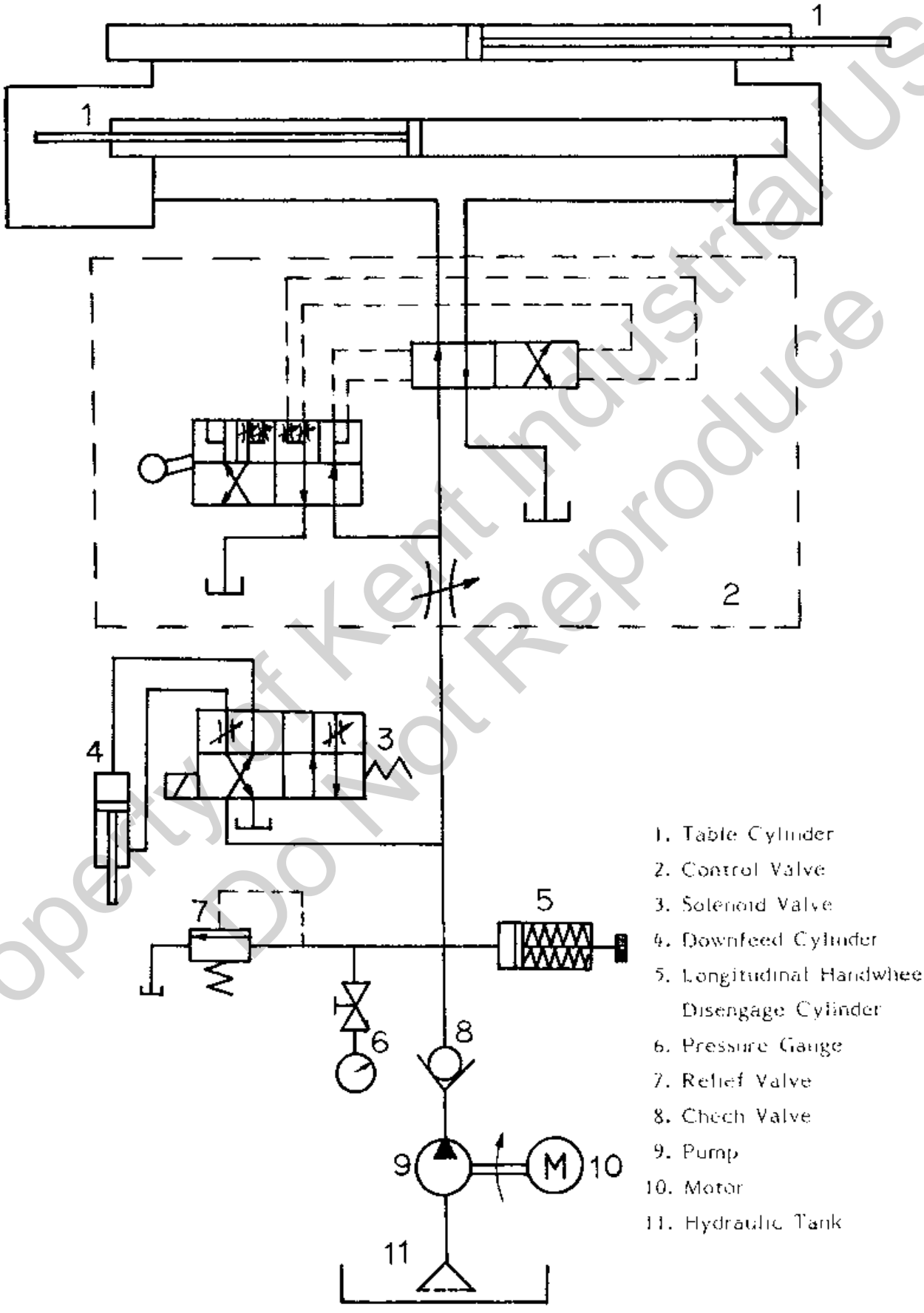

Property of Kent Industrial USA
Do Not Reproduce

g. Hydraulic Oil

Hydraulic tank volume:

KGS-410AH, 410AHD	140 liters
KGS-515AH, 515AHD	235 liters
KGS-620AH, 620AHD	300 liters

Re-fill frequency: After first one month change new hydraulic oil and clean hydraulic tank, then every six months

Hydraulic oil:

CPC	BP	ESSO	MOBIL	SHELL
R-68	ENGRGOL	ESSTIC 50	P.T.E. Oil	SHELL
	HL100		Medium	Tellus Oil 29
	4.5°E/50°C	4.7°E/50°C	3.93°E/50°C	4.0°E/50°C
	33cst/50°C	35cst/50°C	28.9cst/50°C	29cst/50°C

* Fill up the hydraulic oil before starting.
* Table driven by hydraulic force, please ensure that there is no people or matter within the range of table movement before starting the longitudinal travel.
* Maximum hydraulic pressure: 30 kgs/cm^2
* Clean filter or change a new one if damaged when changing new oil.

Property of Kent Industrial USA
Do Not Reproduce

(9) Limit Switch Position

a. KGS-410AH.410AHD

KGS—410 AH(AHD) LIMIT SWITCH POSITION

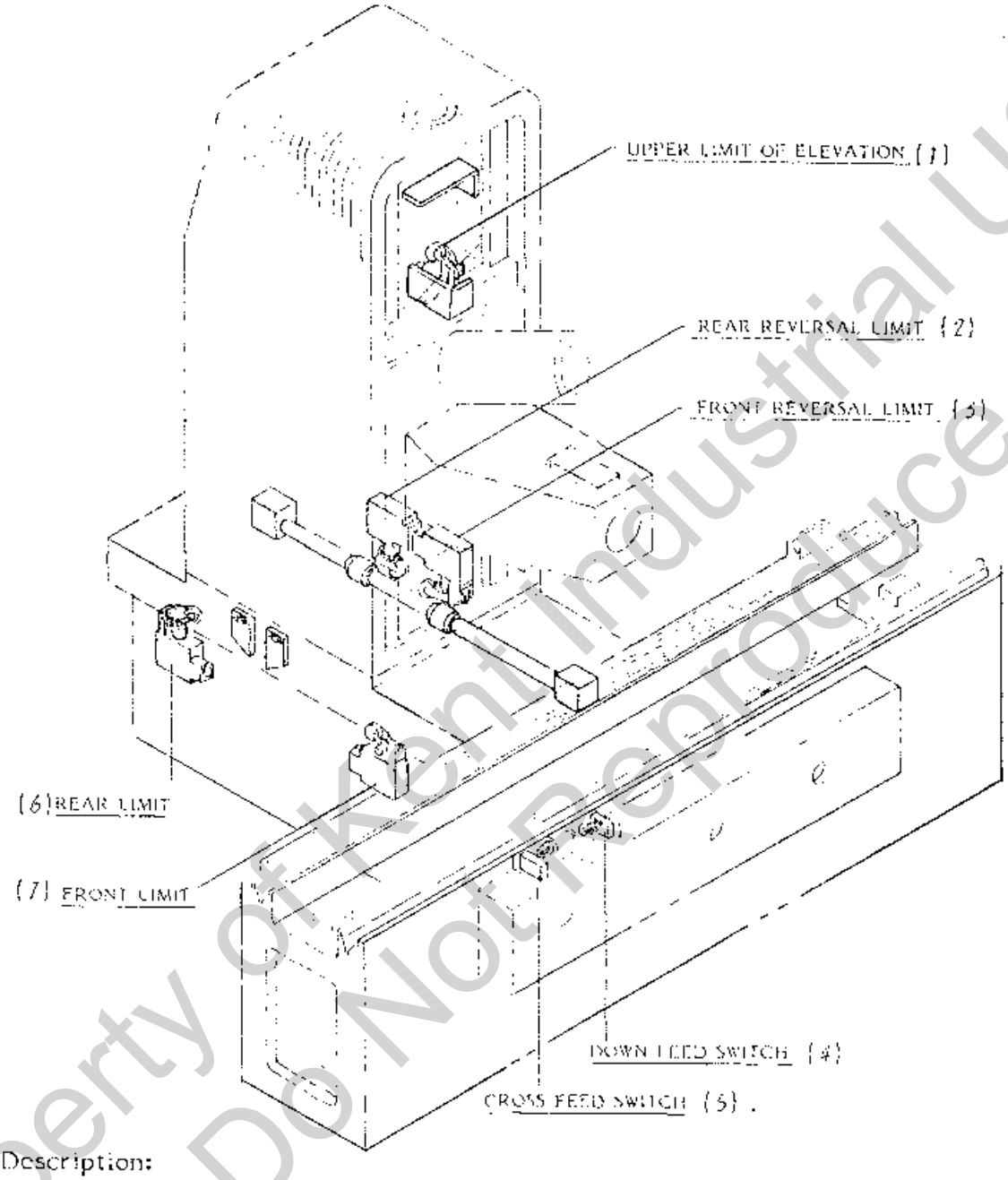

Description:

1. S31-S32
2. L21-L22-L23
3. L11-L12-L13
4. 2-35 (for AHD model)
5. 76-51-52
6. S11-S12
7. S21-S22

* For above Code No., please refer to Circuit Diagram.

Property of Kent Industrial USA
Do Not Reproduce

b. KGS-515AH(AHD), 620AH(AHD)

KGS—515,620AH(AHD) LIMIT SWITCH POSITION

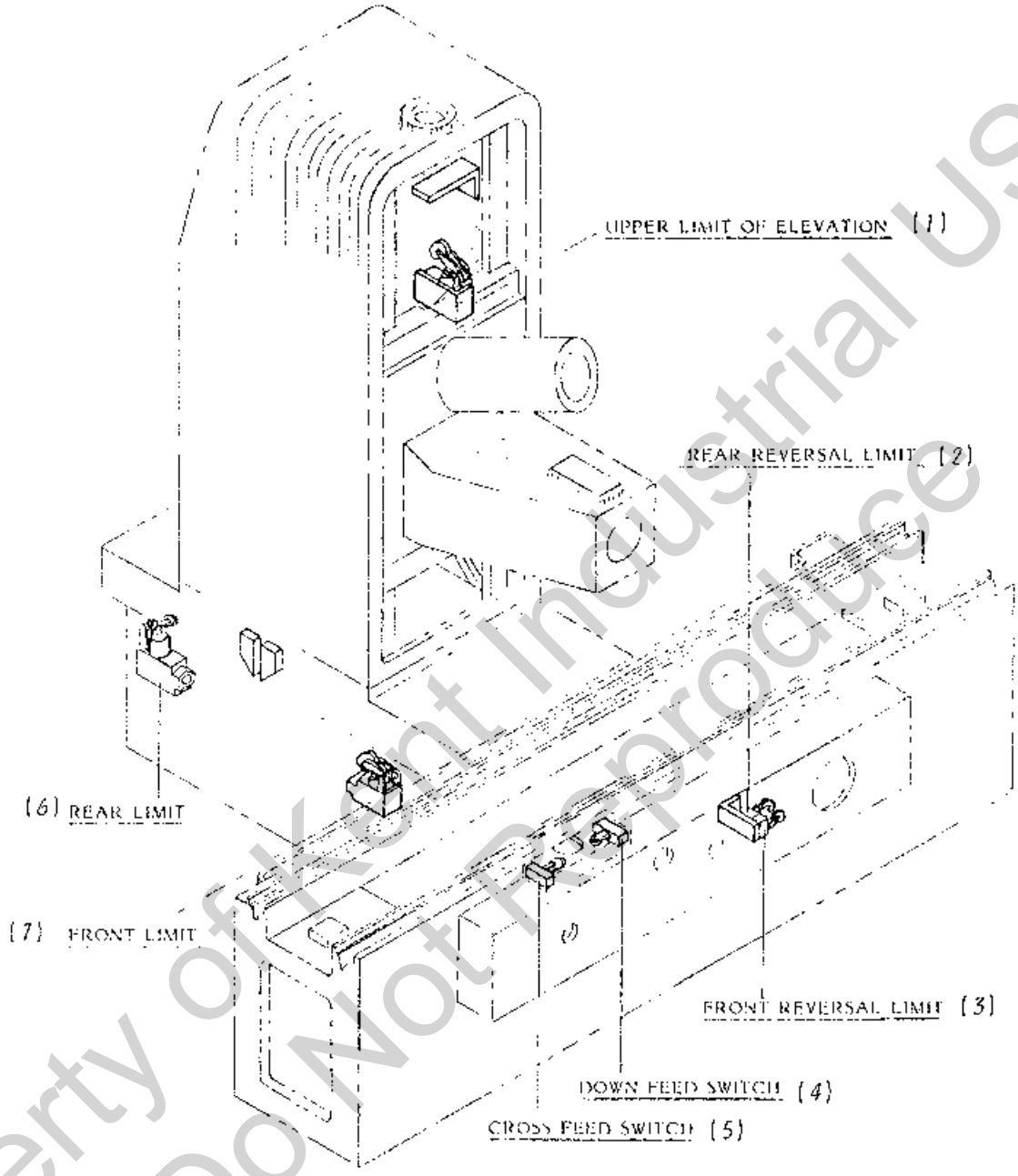

Description:

1. S31-S32
2. L21-L22-L23
3. L11-L12-L13
4. 2-35
5. 76-51-52
6. S11-S12
7. S21-S22

* For above Code No., please refer to Circuit Diagram.

Property of Kent Industrial USA
Do Not Reproduce

(10). Balancing the grinding wheel

Efficient balancing is essential to eliminate unnecessary and additional stress in the wheel. It is also unavoidable to obtain high quality results. Grinding accuracy and surface finish as well as life of grinding wheel, wheel spindle and bearings depend to some considerable extent on careful balancing. Static balancing will frequently sufficed for this purpose.

The grinding wheel together with the wheel flange is fitted to balancing arbor and this assembly is then placed on two accurate parallel knife edges of the wheel balancing base, and balancing can be effected as follows: (see Fig. 2)

* The wheel balancing base must be levelled (Fig. 1)
* Allow the wheel to oscillate to find the center of gravity which is then marked "S" with chalk (Fig. 3)
* Apply the first balancing weight "G" opposite to this point "S" and screw it up. It can not be moved again (Fig. 4)
* Place two correction weight "K" anywhere around the periphery, but at equal distance "a" from weight "G" (Fig. 5)
* Turn the wheel through 90° at a time and see if it is balance. If not, the correction weight "K" must be moved until the wheel is in balance in any position (Fig. 6)
* After balancing, the wheel must be given a test run of at least five minutes at full working speed before being used or starting re-balance.

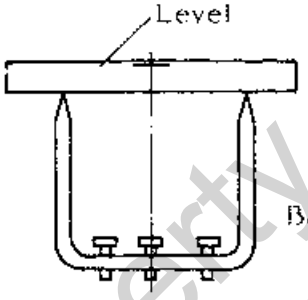

Fig. 1

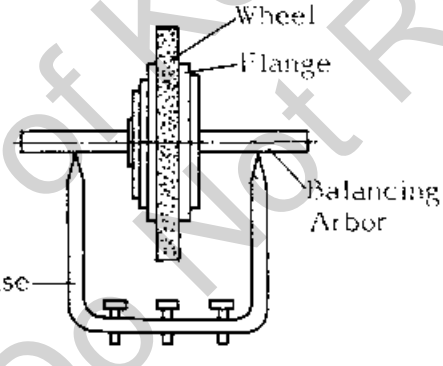

Fig. 2

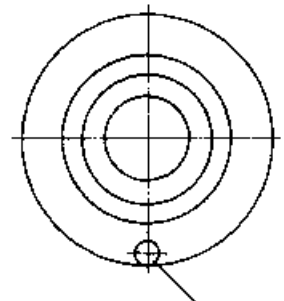

Fig. 3

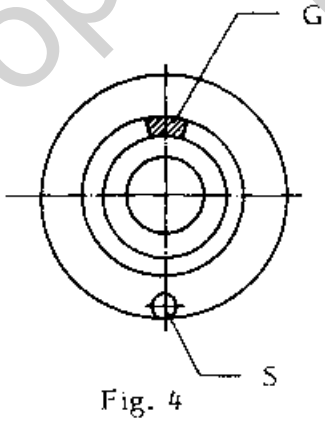

Fig. 4

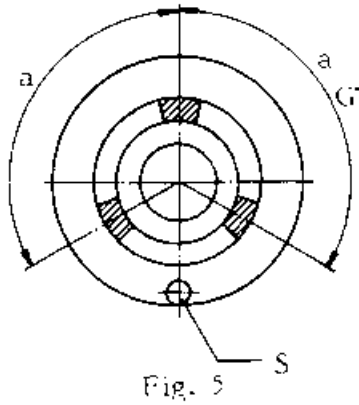

Fig. 5

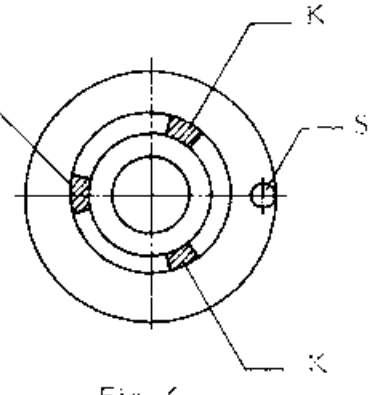

Fig. 6

Property of Kent Industrial USA
Do Not Reproduce

After being balanced for the first time, the wheel must be mounted on the grinding spindle of the machine and dressed. This can be done with the parallel dresser on the spindle carrier or with one fitted on the table. When dressing the wheel from the table, the table must be locked longitudinally and then cross-traversed with handwheel. The wheel must be dressed until it runs dead true. The grinding finish is improved, if any out-of-truth in the side walls of the wheel is also removed.

After this first balancing, the wheel must be removed from the spindle again and then carefully re-balanced. After being fitted to the spindle again and re-dressed, it is ready for use.

* The wheel attached with the machine are accurately balanced together with their mountings. As wear can lead to unbalance, the wheel should be re-checked and, if necessary, re-balanced.

Grinding wheel absorbs humidity and coolant, it is therefore advisable not to start coolant supply when the wheel is stationary, otherwise the wheel will absorb liquid on one side only and will then be out of balance. If the wheel is allowed to stand for any length of time coolant will collect at the lowest point. Unbalance will also be generated if the wheel is not allowed to idle after operation. Idling is essential to throw-off coolant by centrifugal force.

Prior to place the flange-mounted grinding wheel to the spindle, flange bore and spindle taper must be absolutely clean, and the wheel is pushed by hand onto the spindle taper.

Subsequently, tighten wheel flange securely with fixed bolt. (Fig. 7). To release wheel flange from spindle taper with extractor. (Fig. 8).

Fig. 7

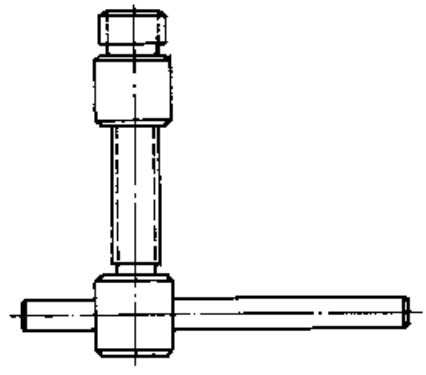

Fig. 8

* If various materials have to be ground, so that the wheel has to be changed frequently, it is more advantageous to change the wheel complete with flange. It would involve unnecessary loss of time and wheel waste to remove the wheel from its mounting every time and re-balance and re-dress it.

Property of Kent Industrial USA
Do Not Reproduce

E. Putting the machine into operation

(1)Be sure that the wire connection is same as your power source before power "ON" the machine.

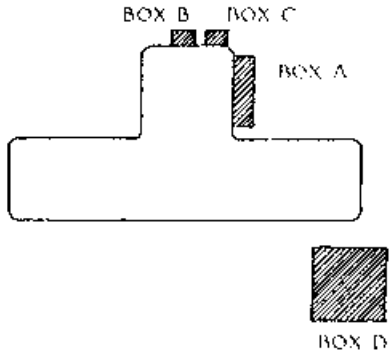

BOX A: Electric cabinet

BOX B: Three-phase transformer for (1). Cross feed motor (M3). (2). Coolant pump M5 (AHD model)

BOX C: Single-phase transformer for

(1) Lubrication pump M6 (200V±10%)

(2) Automatic demagnetizer (220V±5%)

(3) Control panel power 24V

(4) Digital counter power 15V

BOX D: Control panel and control circuit (AHD model)

Attention: Following motors must be wired in accordance with power source voltage.

a. Wire connection of BOXA, B and C (For 380V power voltage only)

1. For 380V power source

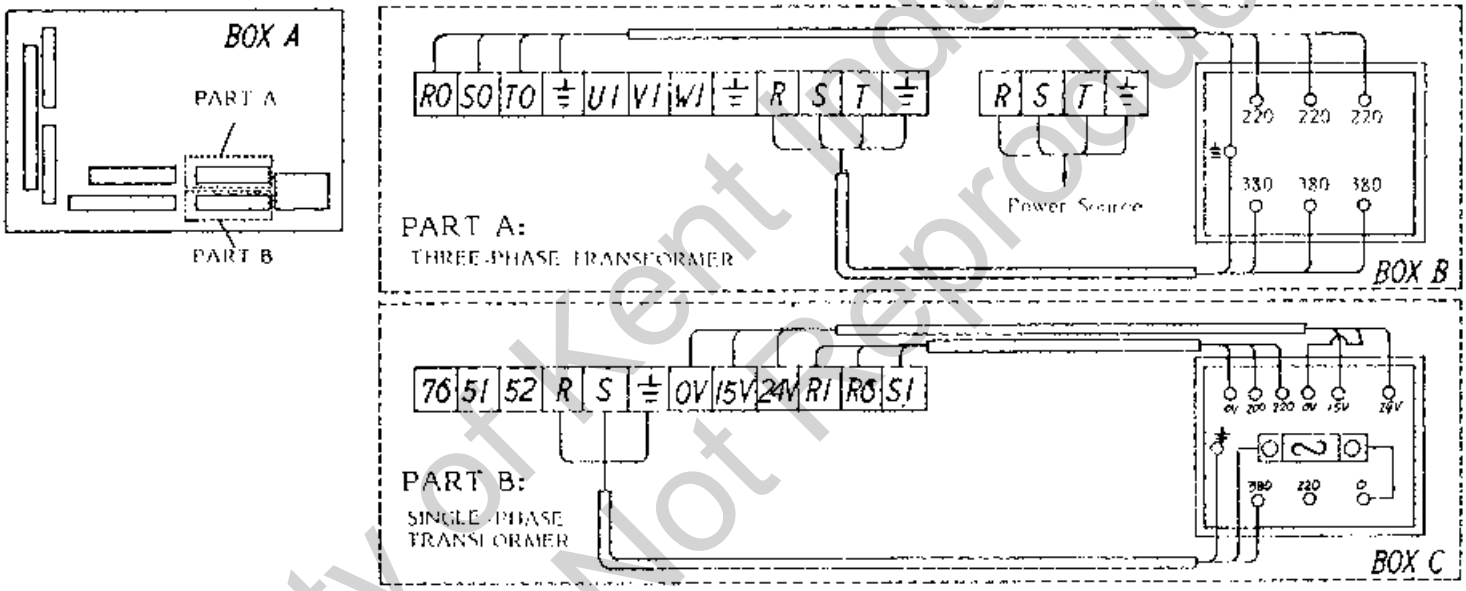

2. For 210 to 220V power source

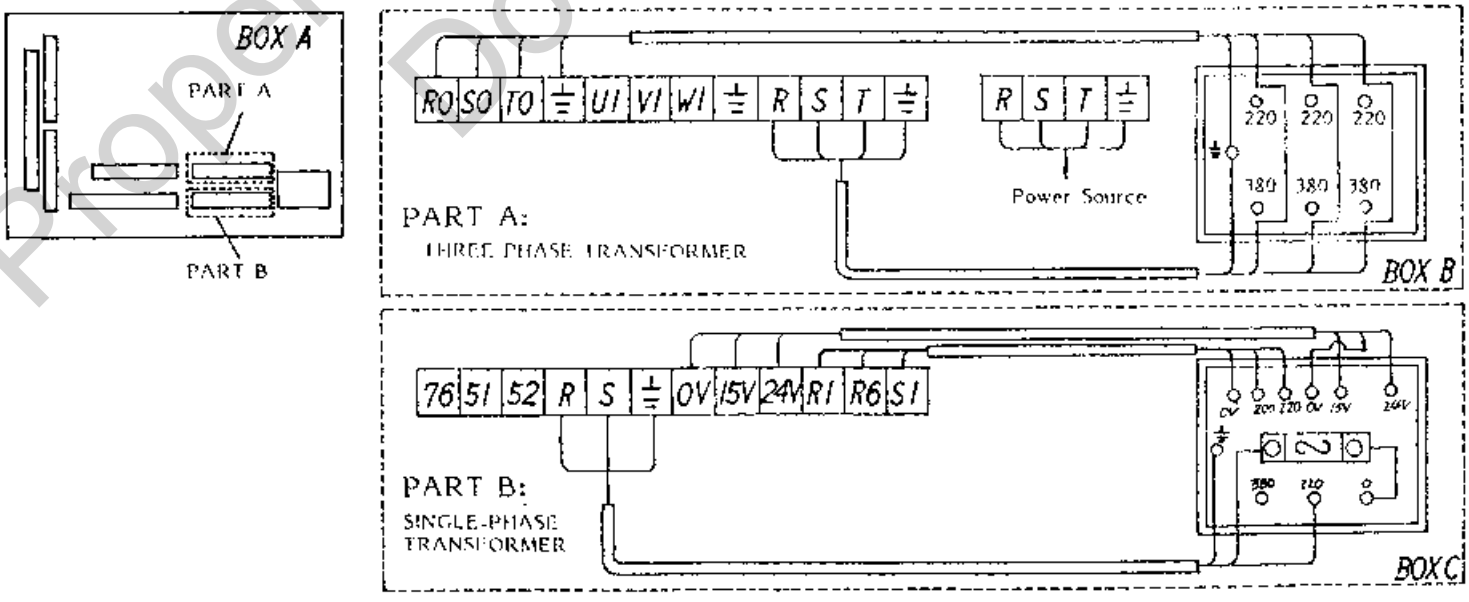

Property of Kent Industrial USA
Do Not Reproduce

b. Wire connection of BOX A, B and C (For U.S.A. area)

1. For 480V power source

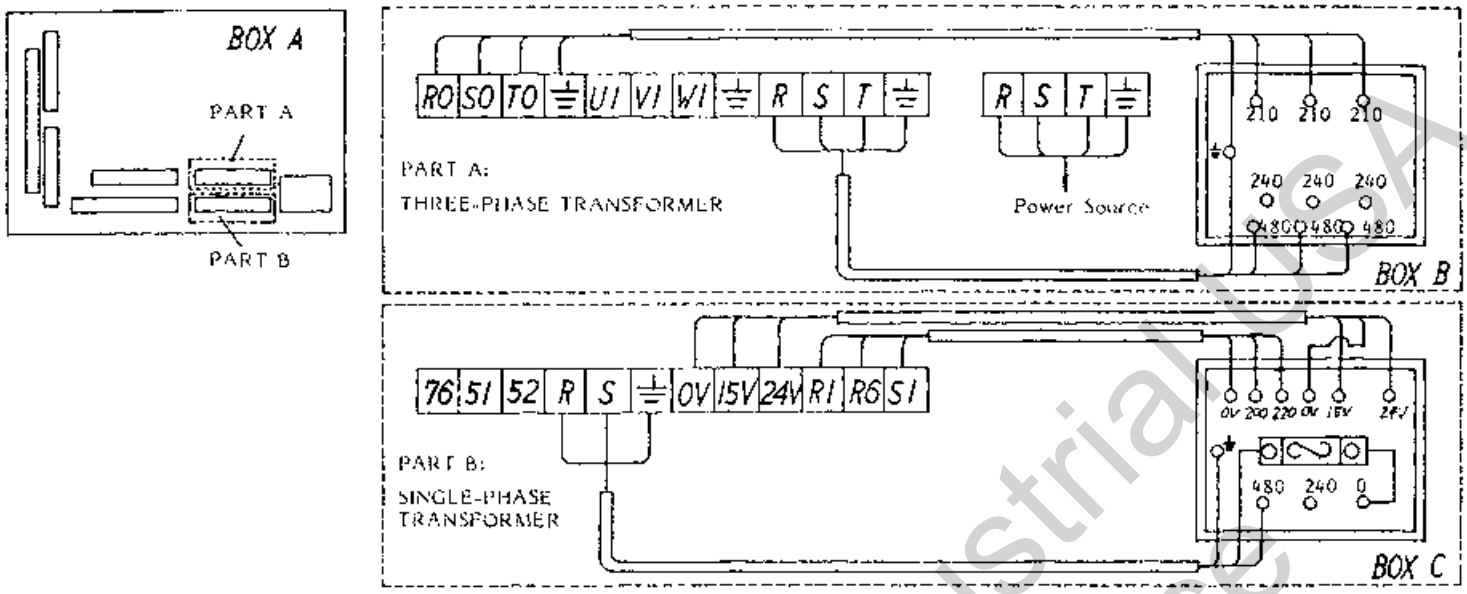

2. For 220V to 240V power source

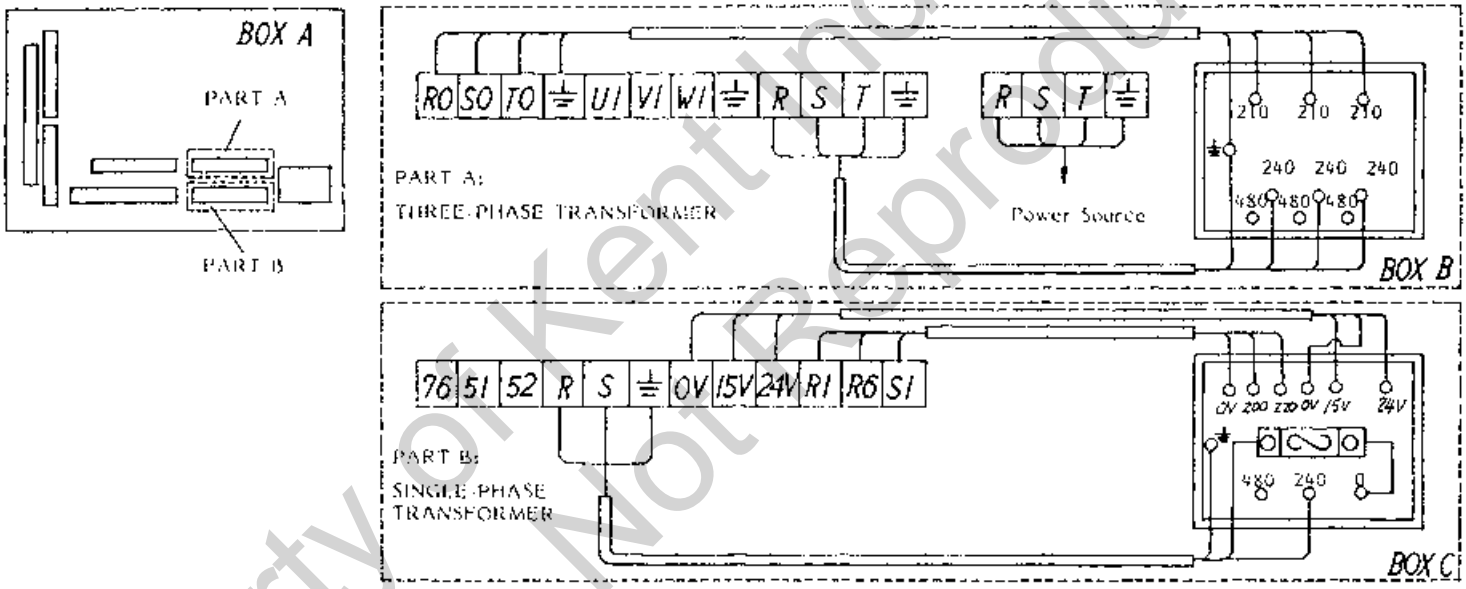

3. For 200V to 220V power source

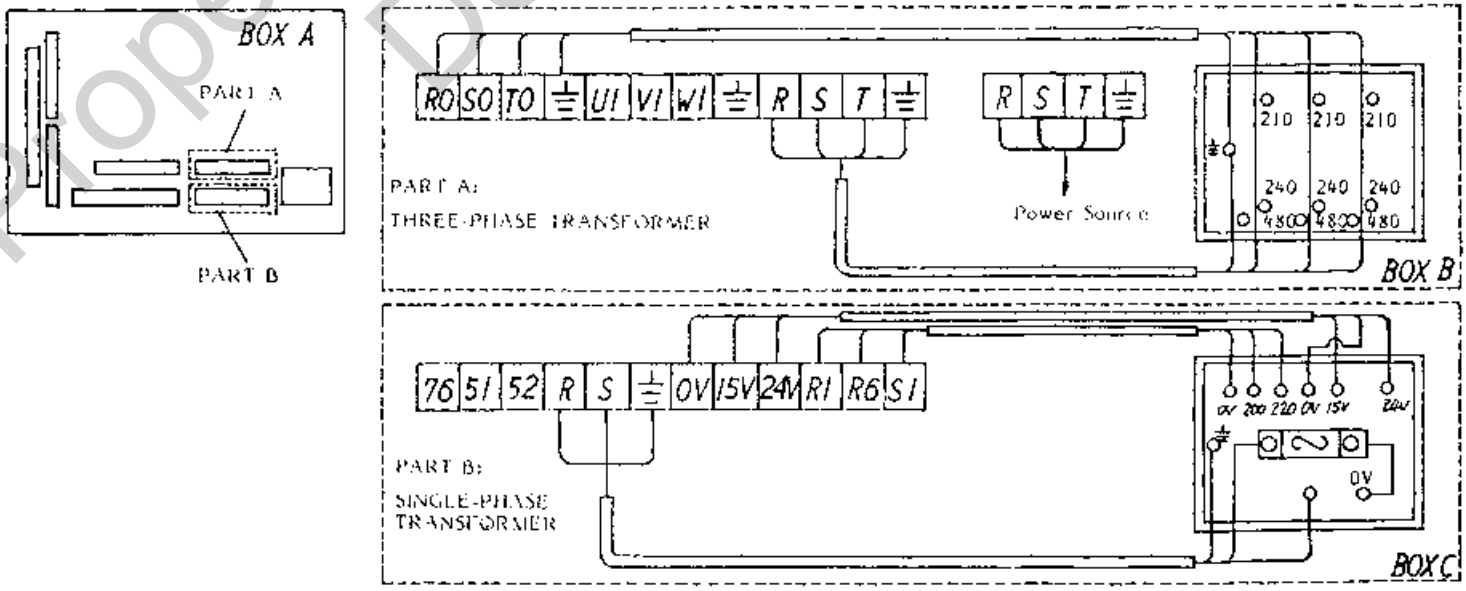

Property of Kent Industrial USA
Do Not Reproduce

(2) KGS-410AH, 515AH, 620AH

a). Control Panel & Description

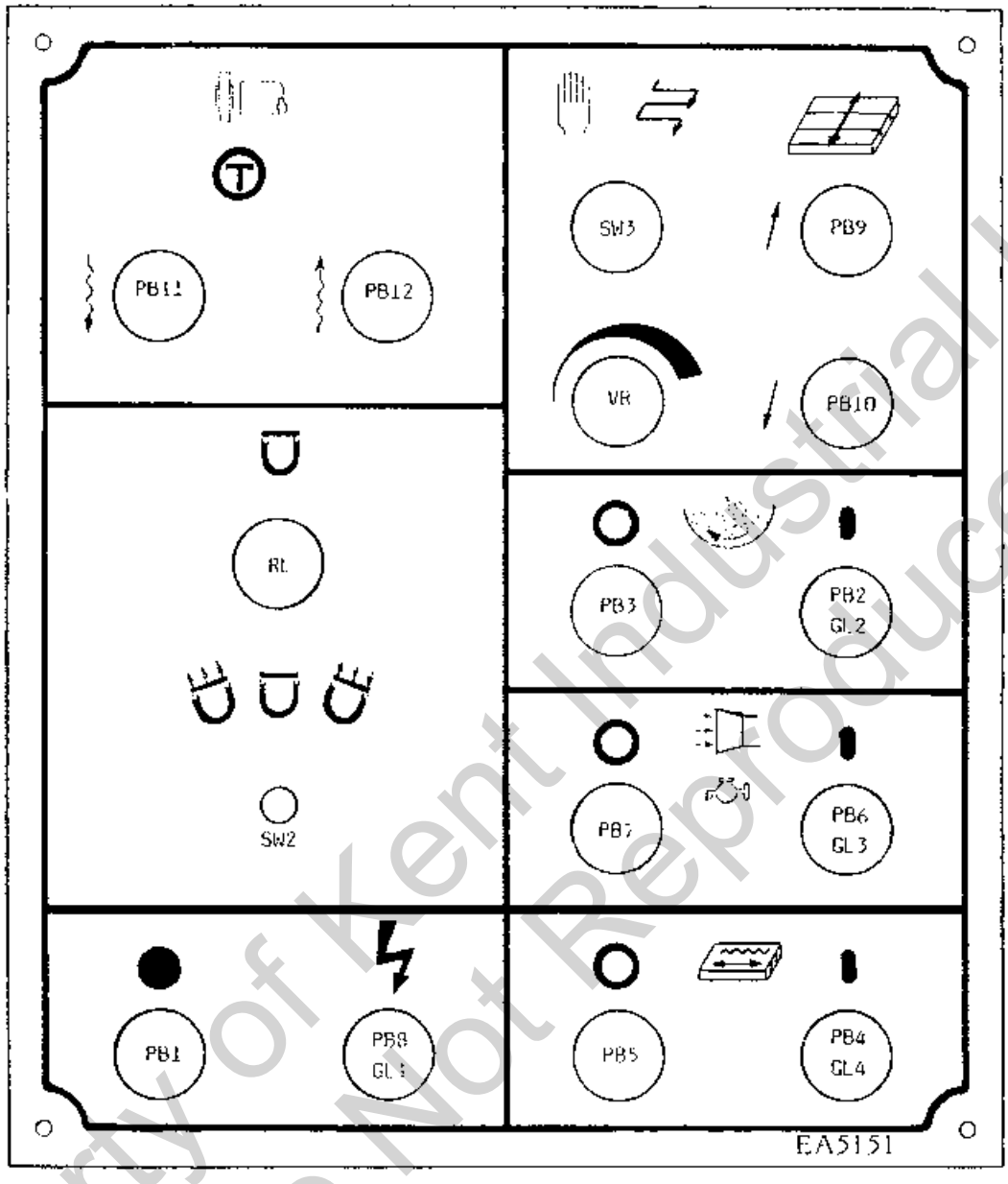

PB1: Emergency stop pushbutton
PB8&GL1: Pushbutton "ON" & indicator of power source
PB2&GL2: Pushbutton "ON" & indicator of grinding wheel motor
PB3: Pushbutton "OFF" of grinding wheel motor
PB4&GL3: Pushbutton "ON" & indicator of hydraulic motor
PB5: Pushbutton "OFF" of hydraulic motor
PB6& GL4: Pushbutton "ON" & indicator of coolant pump
PB7: Pushbutton "OFF" of coolant pump
PB9: Pushbutton for column continuous travel, backward
PB10: Pushbutton for column continuous travel, forward
PB11: Pushbutton for grinding wheel elevation, downward
PB12: Pushbutton for grinding wheel elevation, upward
SW2: Selector switch for electric magnetic chuck, mag./demag.
SW3: Selector switch for column Auto./Manu. functions
RL: Indicator of electric magnetic chuck, mag./demag.
VR: Variable resistance for cross feed incremental control
*SW1: Selector switch for electric magnetic force, 4 steps

Property of Kent Industrial USA
Do Not Reproduce

b). Operation

1). It's only after the following instructions have been strictly complied with that the machine can be started:

1. Choice of a location free from vibration.
2. Installtion and levelling of the machine.
3. Lubrication of the machine to lubricating instruction.
4. Filling the hydraulic tank with oil.
5. Flow control lever for hydraulic table traverse must be in vertical position.
6. Checking the spindle rotation direction, it must be in clockwise. (Please take off the wheel prior to start spindle, or it will cause danger if it rotates counter-clockwise.)

2). Power ON & OFF

1. Press PB8, GL1 indicator lights, the control box in ready condition.
2. Press PB1 to stop power. Re-set PB1 and re-press PB8 for power ON again.

3). Table longitudinal traverse

1. Press PB4 to start hydraulic motor.
2. Turn flow control lever clockwise until table starts slowly, when it turns 90° it get maximum table speed.
3. If the table starts jerkily, may be there is air in the hydraulic hose. The air will escape easily if the table be operated at high speed and long stroke.
4. Press PB5 to stop hydraulic motor, now the table can be operated by handwheel.

4). Cross traverse

1. KGS-410AH, 515AH, 620AH are of column traverse.
2. Turn SW3 to position, press PB9 makes cross traverse backward continuously; press PB10 makes cross traverse forward continuously.
3. Turn SW3 to right, press PB9 or PB10 and then release, adjust VR, the crossfeed now feeds automatically which effected with each reversal of table. By acturating SW3 to left, this operation can be interrupted at once. For KGS-410AHD, the cross travel can be limited by setting the two stopper dogs' distance to press the two limit switches located on the right side of the machine base, which effects the reversal of the cross feed; For KGS-515AHD, 620AHD, the cross travel can be controlled by crossfeed control mechanism.
4. There are two limit switches, in addition, on the left side of the machine base for limitting the maximum cross traverse of the column. They are also used as safety device in case of accident when any failure of the crossfeed mechanism.

5). Power elevation

1. Press PB12 the wheel elevation upward, release to stop. Press PB11 the wheel elevation downward, release to stop.
2. When the grinding wheel is going to touch workpiece, change to control downfeed by handwheel.
3. For safety, stop rotating of the grinding before wheel power downfeed. Please refer to Circuit Diagram, safety circuit " SHORT BAR ".

Property of Kent Industrial USA
Do Not Reproduce

6). Coolant

1. Press PB6 to start coolant pump. Press PB7 to stop.
2. Adjust valve to suitable coolant flow.

7). Wheel spindle

1. Press PB2, GL2 indicator lights, the wheel spindle motor starts; press PB3 to stop.

8). Electric magnetic chuck

1. Turn SW2 to right position for chuck magnetism, RL indicator lights.
2. Turn SW2 to left position for chuck demagnetism, RL indicator will be visible and vanishing for 12 times. When DL vanished, the chuck in full demagnetism condition.
3. The chuck magnetic force can be adjusted in 4 steps by turnning the SW1 inside the electric control box.

Property of Kent Industrial USA
Do Not Reproduce

(3) KGS-410AHD, 515AHD, 620AHD

a) Control panel & Description

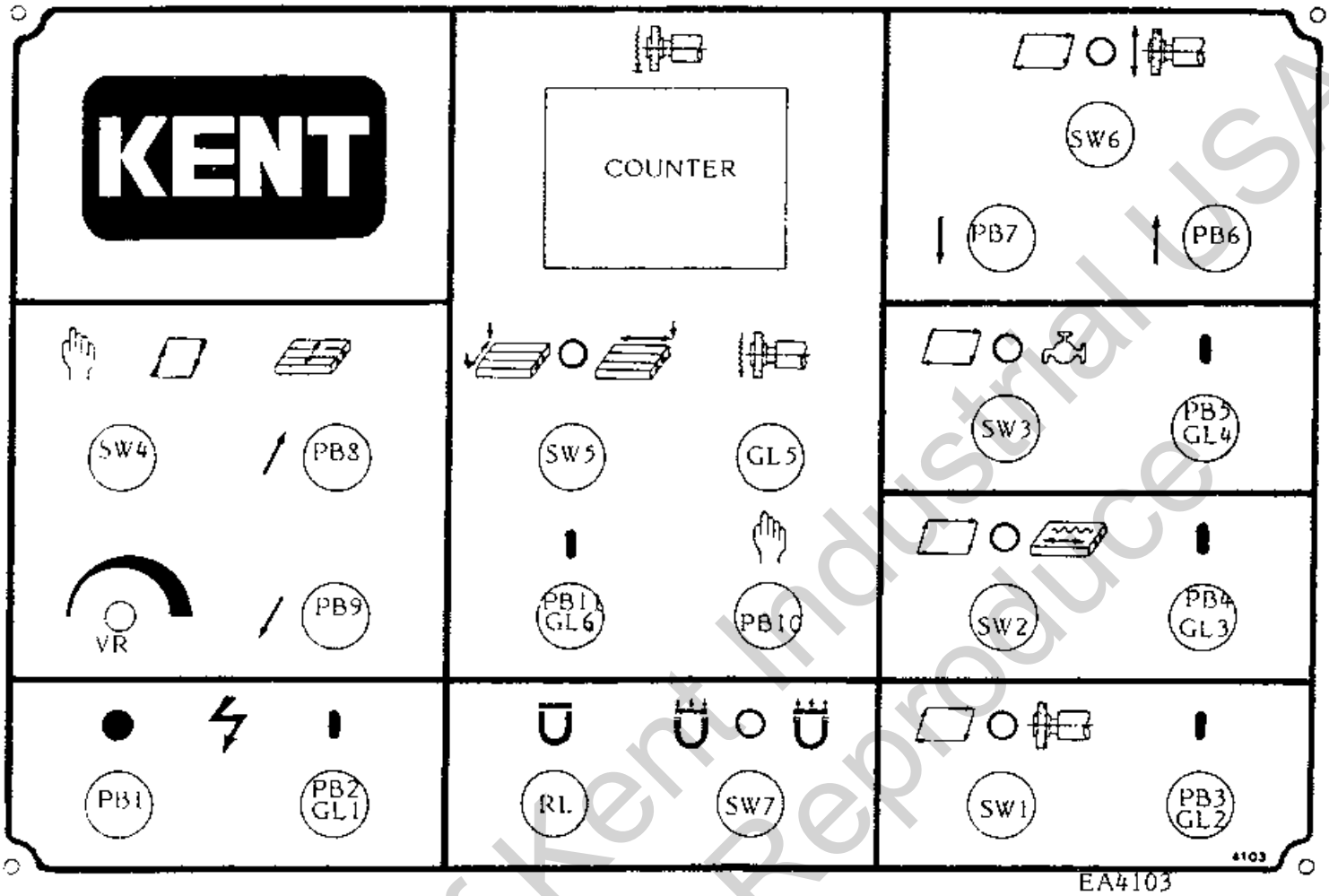

EA4103

PB1: Emergency stop pushbutton
PB2&GL1: Pushbutton "ON" & indicator of power source
PB3&GL2: Pushbutton "ON" & indicator of grinding wheel motor
PB4&GL3: Pushbutton "ON" & indicator of hydraulic motor
PB5&GL4: Pushbutton "ON" & indicator of coolant pump
PB6: Pushbutton for grinding wheel elevation, upward
PB7: Pushbutton for grinding wheel elevation, downward
PB8: Pushbutton for column continuous travel, backward
PB9: Pushbutton for column cintinuous travel, forward
PB10: Pushbutton for jogging downfeed at one incremental
PB11&GL6: Pushbutton "ON" & indicatorof Auto. downfeed
SW1: Selector switch for grinding wheel functions
SW2: Selector switch for table hydraulic functions
SW3: Selector switch for coolant functions
SW4: Selector switch for column Auto./Manu. functions
SW5: Selector switch for surface/plunge grinding
SW6: Selector switch for grinding wheel elevation functions
SW7: Selector switch for electric magnetic chuck mag./demag.
GL5: Indicator of grinding wheel downfeed
RL: Indicator of electric magnetic chuck demagnetism
Counter: Counter for downfeed & spark-out "Times" preset
VR: Variable resistance for cross feed incremental control
*SW8: Selector switch for electric magnetic force, 4 steps

Property of Kent Industrial USA
Do Not Reproduce

b). Operation

1). Power ON & OFF

1. Press PB2, GL1 indicator lights, the control box in ready condition.
2. Press PB1 to stop power. Re-set the PB1 and re-press PB2 for power ON again.

2). Table longitudinal traverse

1. ▱ means the full cycle control, when setting at ▱ position, it will stop hydraulic motor automatically after finished the downfeed work.
2. Turn SW2 to right or left, press PB4 to start hydraulic motor.
3. Turn flow control lever clockwise until table starts slowly, when it turns 90° it gets maximum table speed.
4. If the table starts jerkily, may be there is air in the hydraulic hose. The air will escape easily if the table be operated at high speed and long stroke.
5. Turn SW2 in middle position to stop hydraulic motor, now the table can be operated by handwheel.

3). Cross traverse

1. KGS-410AHD, 515AHD, 620AHD are of column cross traverse.
2. Turn SW4 to left, press PB8 makes cross traverse backward continuously; press PB9 makes cross traverse forward continuously. This function only effective when SW5 is in left position (surface grinding), it's the safety circuit to interlock cross traverse when SW5 in right position for plunge grinding.
3. Turn SW4 to right, press PB8 or PB9 and then release, adjust VR, the crossfeed now feeds automatically which effected with each reversal of table when surface grinding. By acturating SW4 to left, this operation can be interrupted at once. For KGS-410AHD, the cross feed distance can be limited by setting the two stopper dogs' distance to press the two limit switches located on the right side of the machine base, which effects the reversal of the cross feed: For KGS-515AHD, 620AHD, the cross travel can be controlled by the cross feed distance control mechanism.
4. There are two limit switches, in addition, on the left side of the machine base for limitting the maximum cross traverse of the column. They are also used as safety device in case of accident when any failure of the crossfeed mechanism.

4) Power elevation

1. ▱ means the full cycle control, when setting at ▱ position, the grinding wheel will upward 5mm (0.2") when cycle is finished.
2. Turn SW6 to left or right, press PB6 the wheel elevation upward, release to stop. Press PB7 the wheel elevation downward, release to stop.
3. When the grinding wheel is going to touch workpiece, change to control downfeed by handwheel.
4. For safety, stop rotating of the grinding before wheel downfeed.

5). Coolant

1. ▱ means the full cycle control, when setting at it, coolant pump will auto stop after the cycle is finished.

Property of Kent Industrial USA
Do Not Reproduce

2. Turn SW3 to left or right, press PB5 to start coolant pump.
3. Adjust valve to suitable coolant flow.

6). Wheel spindle

1. ⬚ means full cycle control, when setting at it , the grinding wheel will auto stop after cycle is finished.
2. Turn SW1 to left or right, press PB3 to start wheel spindle motor, turn SW1 to middle position to stop.

7). Electric magnetic chuck

1. Turn SW7 to right for chuck magnetism, RL indicator lights.
2. Turn SW7 to left for chuck demagnetism, RL indicator will be visible and vanishing for 1 2 times. When RL vanished, the chuck in full demagnetism condition.
3. The chuck magnetism force can be adjusted in 4 steps by turnning the SW8 inside the electric control box.

8). Downfeed

1. Preset downfeed increment from the preset dial. Each step can be 0.005, 0.01, 0.015, 0.02, 0.03, 0.04mm, adjustable in 6 steps (metric type); 0.0002, 0.0004, 0.0006, 0.0008, 0.0012, 0.0016", adjustable in 6 steps (inch type).
2. Downfeed times can be preset on counter from 1 to 99 times.
   Spark-out times can be preset on counter from 1 to 9 times.
3. Press PB10 once, GL5 indicator lights for a period of time, wheel downfeeds by one increment set from the preset dial. This is manual "jogging".
4. For example:

4-1 Decide stroke removal, For example: 0.6mm (0.024")

4-2 Preset downfeed increment, For example: 0.02mm (0.0008")

4-3 Preset downfeed "times" from the counter, 0.6/0.02=30times (0.024/0.0008=30)

4-4 Preset spark-out "times" from the counter, For example: 5 times

4-5 For surface grinding:

Turn SW5 to left, the downfeed effected with crossfeed reversal and when table at left side, that means grinding wheel downfeeds at right side of workpiece.
Press PB11, indicator GL6 lights, it begins automatic downfeed. The counter has LED display showing which sequence been approached. When the total downfeed set on counter (For example: 30 times) has been reached, it switches off the infeed and followed by the preset spark-out passes (For example: 5 times) which also LED display showing the sequence.

4-6 For plunge grinding:

Turn SW5 to right, the down feed effected with table reversal at left end, that means the grinding wheel downfeeds at right side of workpiece. In the meantime, crossfeed been locked by electric circuit.

4-7 If you preset the selector switches SW1, SW2, SW3 and SW6 at ⬚ position, then the grinding wheel motor, hydraulic motor, coolant pump will stop automatically after the automatic downfeed and spark-out sequences completed, and the grinding wheel will be lifted by about 5mm(0.2") from the workpiece and stop. In this case, the table stops at right end, convenient for loading or unloading workpiece.

Property of Kent Industrial USA
Do Not Reproduce

F. GENERAL COMMENTS OF GRINDING

The grinding results obtained depend to a very degree on the choice of the correct grinding wheel and suitable operation.

(1) Stock removal efficiency

For intensive stock removal a coarse grain (about 30-36) should be used. The wheel is dressed by passing the diamond over quickly so that the surface of the wheel is roughened and bites well.

(2) Surface finish required

If fine finish is to be produced, a finer grain wheel is required (40-80). The diamond in this case is passed slowlyover the wheel so as to break up the grain.

(3) Distortion of the workpiece

If the workpiece shows too much distorrion when being ground, this means that the stock removal was too great and the longitudinal and cross movements of the table was too slow, or the grinding wheel in " clogged ".

(4) Undersirable burns and grinding cracks

If burn marks and grinding cracks appear, this means that the wheel is too hard, or the wheel " clogged "

G. WHEEL INSPECTION

It is absolutely essential to comply fully with following safety rules. These are intended to protect the operator against danger.

Wheel inspection and fitting:

Prior to fitting any grinding wheel, it should always be tested. Sounding the wheel is a generally accepted test method.

The wheel should be suspended from a mandrel secured to its bore and should then be lightly sounded with a wooden hammer. Even wheels with hair cracks not visible with the bare eye will produce a distorted note in comparison with perfect wheel where the sound is clear. Defective grinding wheel must not be used.

There are two pieces of paper washer on both faces of wheel and serve as plastic packings between wheel and mounting flange. The packing washer must not be removed, when mounting the wheel should slide onto the flange easily by hand without the need for force. Wheel flange must be absolutely clean especially on the clamping and location surface, in the spindle bore and thread. The flange fixing screws should be tightened gradually and diagonally. The wrench should be applied at least 4 to 6 times to each screw in turn. When the wheel has run under coolant for sometime the paper packing washers will be damped, so it must re-tighten the fixing screws again diagonally.

Property of Kent Industrial USA
Do Not Reproduce

H. DRESSING THE WHEEL AND CORRECT TREATMENT OF DRESSING DIAMOND

The diamond is inserts in the dressing device. The sleeve of the dressing device is arranged at an angle fo about 5°, so that , when the diamond loses its keenness, it can be turned in the sleeve, along with its holder, thus ensuring that there is always a sharp diamond edge available.

Various degrees of roughness can be produced in the ground component by varying the speed at which the diamond is passed over the grinding wheel.

If there is only about 0.2mm to 0.3mm stock removal, it is advisable to roughen the grinding wheel. This is done by feeding the diamond in about 0.03mm and turning the handwheel rapidly, so that the dressing diamond moves quickly over the wheel. This makes the wheel bite well and the stock removal is good.

If the component is to be finish ground to size with the same grinding wheel, the wheel must be dressed again, this time slowly, in two or three passes, with the diamond fed in only about 0.01mm.

Frequent light dressing is better for the life of the grinding wheel and the diamond than a heavy cut.

When dressing, the diamond should always be cooled, if possible, but sudden cooling is dangerous, as it can lead to the diamond being split.

As the diamond is very brittle because of its extraordinary hardness and being sensitive to even the slightest knock, naturally cracks easily.

When dressing, begin in the center, as the edges are uaually worn down further. If dressing is begun at the worn edges, there is danger of the higher pressure in the center overstressing the daimond and shattering it.

Experience has shown that, with highly accurate grinding, dressing with the hand-operated dressing device on the spindle carrier is inadequate. The hand operation necessarily causes slight undulations in the surface of the wheel.

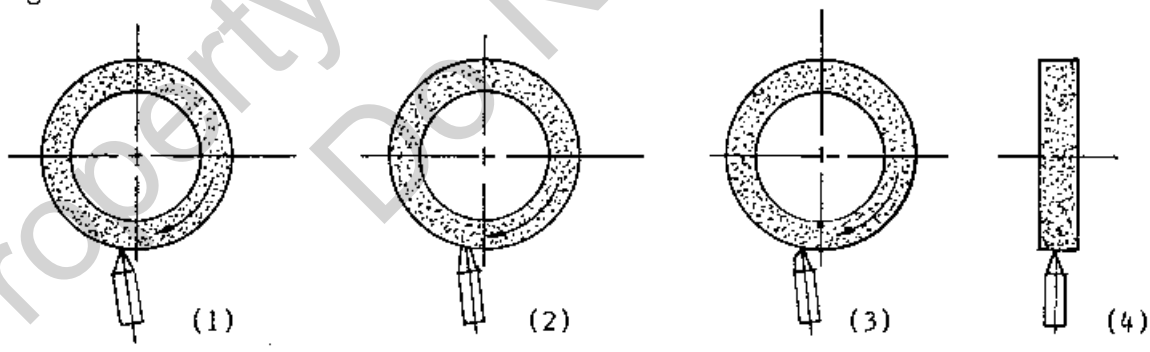

(1) The new diamond is inclined at the correct angle to the wheel.

(2) As a face has formed on the diamond, it must be turned about its axis.

(3) The new point acts like a new diamond again.

(4) Begin in the middle of the width.

Property of Kent Industrial USA
Do Not Reproduce

After a certain time, the diamond must be changed in its holder, i.e. it must be reset to ensure economical operation. This re-setting should be undertaken in time, before any of the holder itself has been ground off. Otherwise, there is first of all the danger of breaking the diamond out and losing it, or secondly, of its being too small to be reset.
This is really false economy.

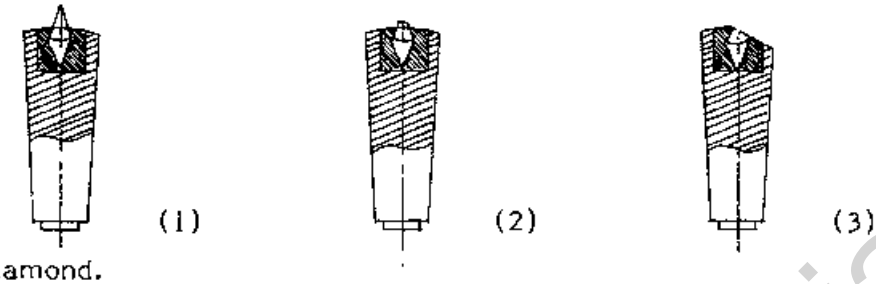

(1) The new diamond.

(2) The diamond now be reset.

(3) Too late. The diamond can no longer be reset, as it has no more holder. Resetting should be done by specialists only.

I. STORAGE OF GRINDING WHEELS

The wheels should be kept in special racks in a dry place and must be protected from knocks and jolts, especially when they are being transported.
As a rule, they should be stood on edge, but thin wheels and wheels with a sharp edge must be laid flat on an even surface.
Grinding wheels must not be allowed to come into contact with oil or grease. An oilsoaked wheel loses its bite and its application is very limited.

J. SELECTION OF SUITABLE GRINDING WHEELS

Grinding wheel markings: For instance WA 46K8V

WA: Kind of abrasive

46: Grain size

K: Grade

8: Structure

V: Bond type

A. Kinds of abrasive

A: For common steel grinding

WA: For higher hardness material grinding, such as heat-treated steel, alloy steel, etc.

H: Suitable for higher hardness material, particularly high speed steel

C: For cast iron and non-ferrous grinding

GC: For super hard grinding such as tungsten carbide steel

B. Grain size

Coarse: 10,12,14,16,20,24

Medium: 30,36,46,54,60

Fine: 70,80,90,100,120,150,180

Property of Kent Industrial USA
Do Not Reproduce

Grain / Grinding condition	Coarse	Fine
Stock removal	much	little
Surface roughness	coarse	fine
works hardness	soft	hard
Surface contacted	wide	narrow
Dia. of the wheel	big	small

C. Grade: It indicate the strength of the bond which hold abrasive

Soft: A to H

Medium: I to P

Hard: Q to Z

Grade / Grinding condition	Soft	Hard
Works hardness	hard	soft
Surface be contacted	wide	narrow
Movement of work	slow	quick
Wheel speed	quick	slow

D. Structure: The structure number of a wheel refers to the relative spacing of the grains of abrasive; the larger number, the wider the grain spacing.

Close: 0,1,2,3,4,5,

Medium: 6,7,8,9,

Wide: 10,11,12,

Sturcture / Grinding condition	Wide	Close
Surface roughness	coarse	fine
Surface be contacted	wide	narrow
Works hardness	soft	hard

E. Bond:

V: Vitrified,

S: Silicate,

B: Resinoid,

R: Rubber,

E: Shellac

Property of Kent Industrial USA
Do Not Reproduce

K. WHEEL BE RECOMMENDED

Material be ground \ Wheel diameter		Under 205mm	205 to 355mm
Carbon steel	under HRC25°	WA A 46K	WA A 46J
	above HRC25°	WA 46J	WA 46I
Alloy steel	under HRC55°	SA WA 46J	SA WA 46I
	above HRC55°	SA WA 46H	SA WA 46G
Tool steel	under HRC60°	SA WA 46I	SA WA 46H
	above HRC60°	SA WA 46H	SA WA 46H
Stainless steel		SA WA 46 I	SA WA 46H
Cast iron		C 46J	C 46I
Brass		C 30J	C 30 I
Aluminum alloy		C 30J	C 30 I
Tungsten Carbide		GC 60H-1001	GC 60H-1001
Glass		C 60K	C 60K
Marble		C GC 36M	C GC 36M

L. CHOICE OF THE GRINDING CONDITIONS

(1). Down feed of grinding wheel

Finish \ Work material	Down feed			Cross feed
	Cast iron, Soft steel, Hardened steel	Stainless & Heat resistant steel	Tool steel	
Fine	0.0002-0.0004" 0.005-0.01mm		0.0002-0.0006" 0.005-0.015mm	under ¼ of wheel thickness
Rough	0.0006-0.0012" 0.015-0.03mm	0.0008-0.0012" 0.02-0.03mm	0.0008-0.0012" 0.02-0.03mm	under ½ of wheel thickness

Down feed	Great	Small
Grinding resistance	great	small
Heat produced	much	less
Surface finish	rough	fine
Wheel worn out	much	little

Property of Kent Industrial USA
Do Not Reproduce

(2). Cross feed

Cross feed	Great	Small
Grinding resistance	great	small
Heat produced	much	less
Surface finish	rough	fine
Wheel worn out	much	little

(3). Table longitudinal traverse

Table traverse	Quick	Slow
Grinding resistance	great	small
Heat produced	less	much
Surface finish	rough	fine
Wheel worn out	much	little

Suitable speeds of the table traverse

Work material	Soft steel	Heat treated steel	Tool steel	Cast iron
Speed: M/Min.	6-15	20-25	6-25	16-20

(4). Suitable peripheral speeds of wheel : 1200-1800M/Min.

Wheel speed / Condition	Quick	Slow
Grinding resistance	small	great
Heat produced	much	less
Surface finish	fine	rough
Wheel worn out	small	great
Safety	bad	better

Material	Peripheral speed
Steel	20-30M/Min.
Cast iron	18-20M/Min.
Tungsten Carbide	8-18M/Min.
Zinc alloy and light metal	25-30M/Min.

Property of Kent Industrial USA
Do Not Reproduce

M. USE OF THE OPTIONAL ATTACHMENT

(a).Parallel Dressing attachment (Standard Accessory)

The wheel can be dressed either by diamond tool on the chuck or on the parallel dressing attachment which mounted on spindle carrier. The diamond tool is arranged at an angle to the center line of the wheel as shown on Fig. , so that when the diamond loses its keenness it can be turned an angle, ensuring that there is always a sharp diamond edge available. The dressing method and points are same as "Dressing the wheel". Experience has shown that, with highly accurate grinding, dressing with the diamond which mounted on the magnetic chuck is better than which on the spindle carrier (the former is more stable than latter) as the latter condition will cause slight undulation in the surface of the wheel.

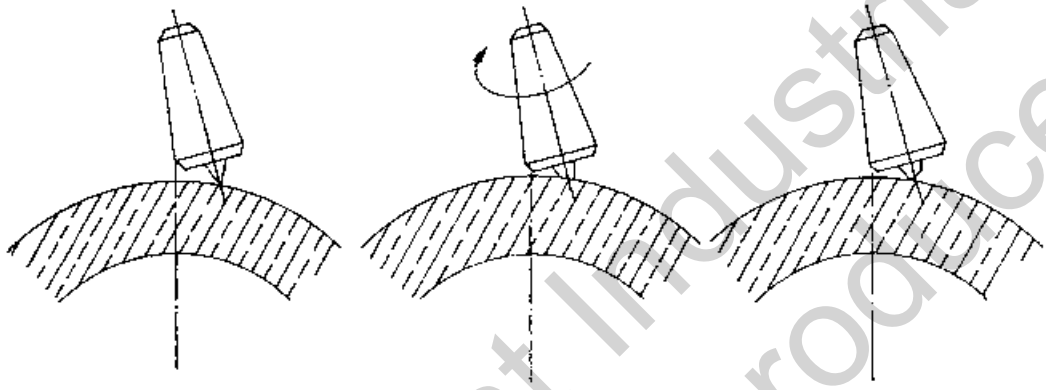

(b). Angle forming attachment

(1) Let the Attachment be attracted to the magnetic chuck, keeping a 90° right angle between the attachment and the wheel. The magnetic chuck should be kept level.

(2) The value in question will be the Sine of the angle times 50. That is B-Sinθ x 50

(3) Get a Block gauge the thickness of which equals that of B (or make one)

(4) Put this Block gauge under the base of the Sine Bar stand. Fix with the fastening bolts and the forming is done.

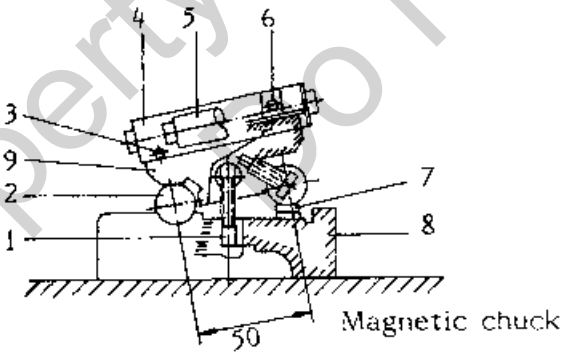

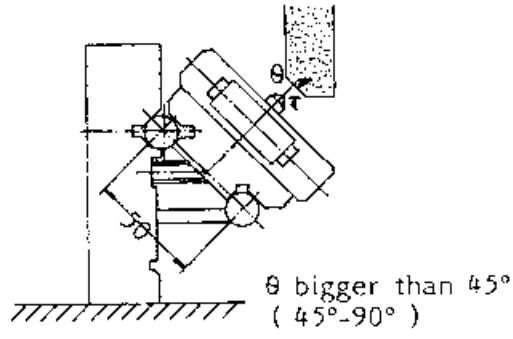

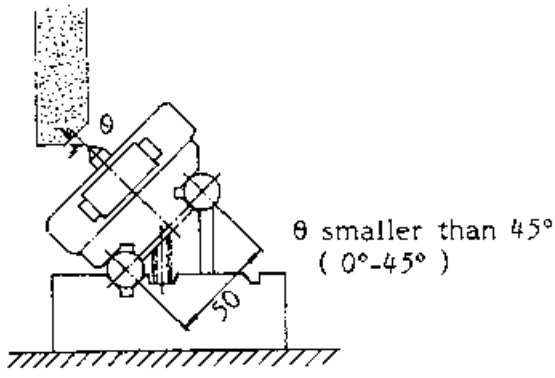

1. Fastening bolt
2. Mandrel
3. Slide adjustment bolt
4. Slide base
5. Handle
6. Diamond fixed hole
7. Block gauge
8. Build-in base
9. Sine Bar stand

Property of Kent Industrial USA
Do Not Reproduce

(c). Sine Bar

The Sine Bar is used to chuck the inclined angle of the magnetic chuck, when the angle forming surface is large.

(1) The value in question equals the Sine of the angle times 100, B=Sinθ x 100

(2) Get a block gauge the thickness of which equals that of B.

(3) Put this gauge at one end of the Sine Bar and let it be attacted to the inclinable magnetic chuck. This Sine Bar shall be kept parallel to the longitudinal direction of the machine.

(4) Press the dial gauge against the surface of the Sine Bar and meanwhile turn the cross feed hand wheel, so that the saddle moves back and forth for the checking of the accurancy of the angle of the magnetic chuck

1. Mandrel
2. Sine Bar
3. Block gauge
4. Applicantion of the trigonometry
5. Inclincalb Magnetic Chuck
6. Mandrel of the Magnetic Chuck
7. Stop block

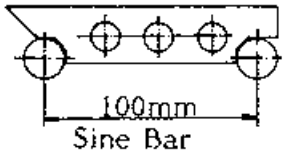

Sine Bar

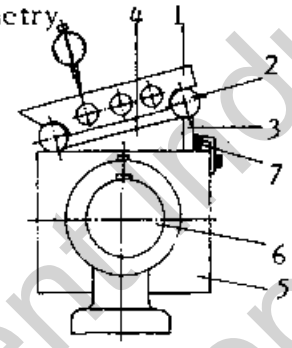

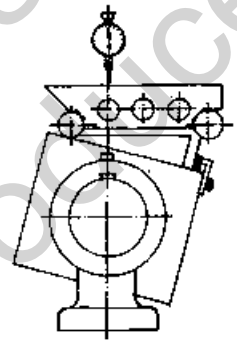

(d) . Radius Forming Attachment

The Radius Forming Attachment is composed of a main stand, several swing rods and a diamond tool.

(1) Main Stand

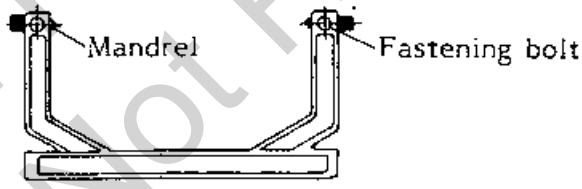

(2) Swing rod and diamond tool

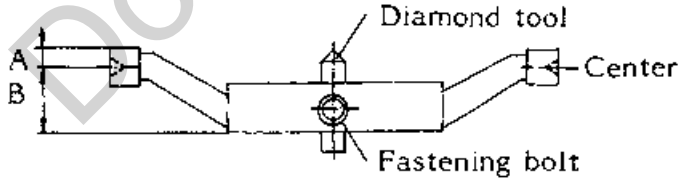

A name plate is attached to the swing rod with the A and B to mean:

A: the distance between the upper rim and the center

B: the distance between the bottom rim and the center

The R forming is the adjustment of the distance between the diamond tool and the swing rod center so that the R shaping results.

Property of Kentonindustrial USA
Do Not Reproduce

(3) To determine the concave and convex R:

a. If the tool is parallel to the center line, it equals OR.

b. To determine the convex R: Put the swing rod on a place disk. Put a block gauge of proper thickness under the diamond tool. Then R = X-A

c. To determine the small concave R

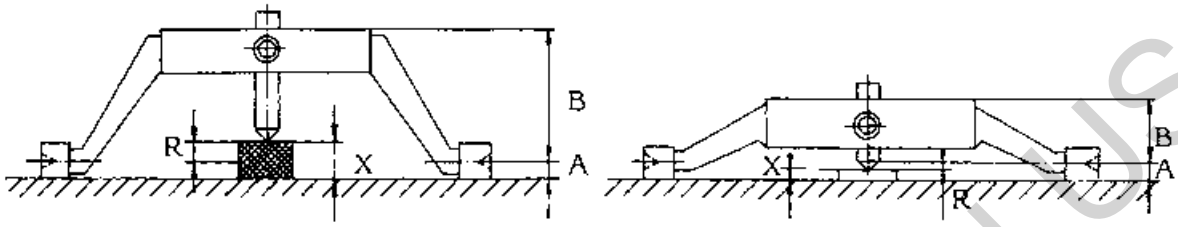

d. To determine the big concave R: R= B+X.

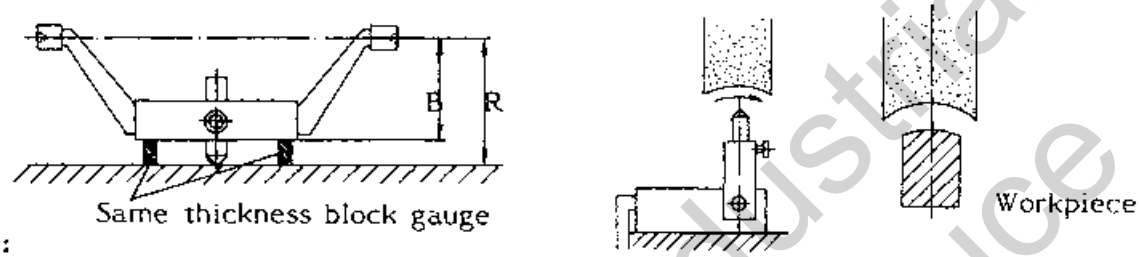

e. Note:

1. The base and side of the grinding wheel shall be well-dressed.
2. The Radius Forming Attachment shall be parallel to the grinding wheel.
3. The diamond tool shall be parallel to the Radius Forming Attachment.

(4) Operation of the Radius forming attachment:

a. Find the center of the grinding wheel, then fix the work table.

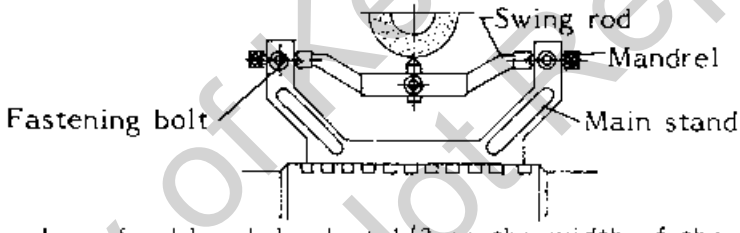

b. Turn the down-feed handwheel at 1/3 on the width of the wheel so that the wheel cuts into 0.02mm of the diamond tool. Now turn the cross feed handwheel to dress the grinding wheel, and turn the calibration reading on the down feed back to zero.

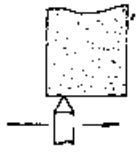

c. Turn the diamond tool over an angle 90° and elevate it into a proper position (greater than the R size in question)

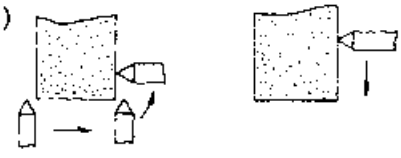

d. Elevate the grinding wheel so that it goes away from the diamond tool and the wheel in such a position that the distance betwen the side of the wheel and the center of the Diamond tool is just R.

Property of Kent Industrial USA
Do Not Reproduce

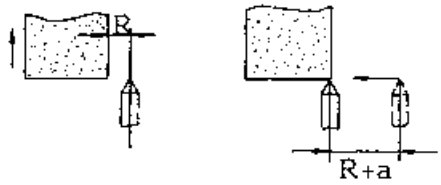

e. Move the diamond tool (R+a) leftward, with "a" found in the following table.

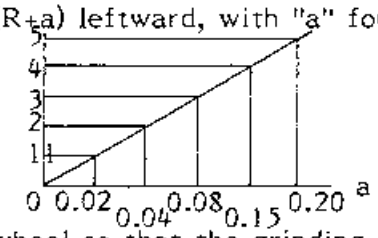

f. Turn the downfeed handwheel so that the grinding wheel approaches the diamond tool.

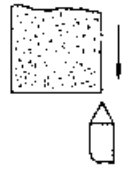

g. Turn the swing rods 90° each time, inching 0.05mm till the R is determined.

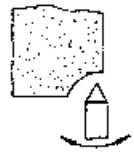

h. The wheel finally becomes the following shape.

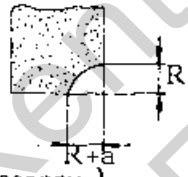

(e). Coolant System (Standard accessory)

Insert the power source plug in socket (at the rear side of electric control box).

Press the pushbutton switch to start the coolant pump, the pump should rotates in clockwise direction, if not, interchange the any two cords of three-cord cable.

Adjust coolant flow by turning the ball valve to suitable rate.

Cooling water collected from table and returns to coolant tank through return hose then filtered in the coolant tank by turns of cabinet #1,2,3,4.

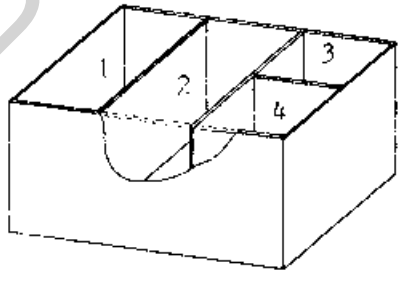

* Coolant tank capacity: 110 liters
* Coolant pump: 1/8 HP

Property of Kent Industrial USA
Do Not Reproduce

(f) . Common cases in Side Grinding

(1)

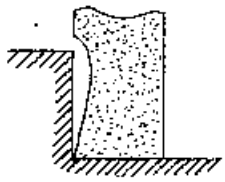

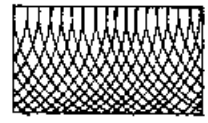

In the case shown in the figure above, the side-grinding wheel and the work have a smaller contact surface, in which case the efficiency is higher, and the surface roughness is better.

(2)

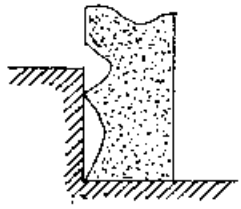

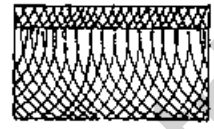

Inthe figure above, the wheel and the work have two sections of contact, and the surface of grinding is bad. The surface has to be corrected into the shape shown in (1).

(3)

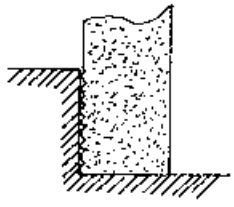

The wheel did not cut to "Relief Angle", thus it contacts the whole face of the work, causing the surface of processing rough and rugged. Also, the greater face of contact will cause burns and cracks.

(4)

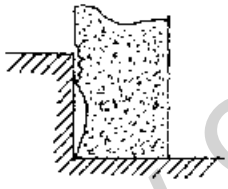

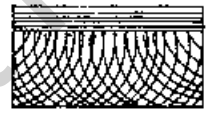

The "Relief Angle" of the wheel is lower than the surface of the work, so that the work face becomes two sections, the upper section resembling that in (3) and the lower section in (1). Now it is necessary to enlarge the "Relief Angle" part so that it will higher than the face of the work.

(5) If the spindle does not constitute a right angle with the work table surface, the side faces will turn out to be as shown :

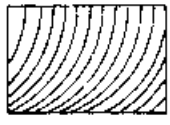

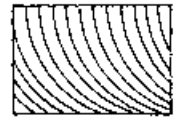

(g) . Right Angle Grinding

(1) Tools

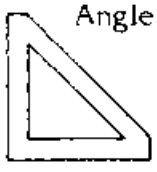

Angle gauge

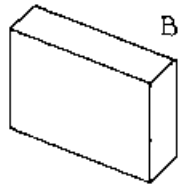

Block

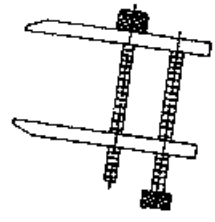

Clamp

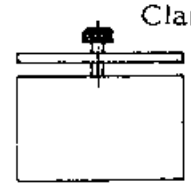

Clamp

Property of Kent Industrial USA
Do Not Reproduce

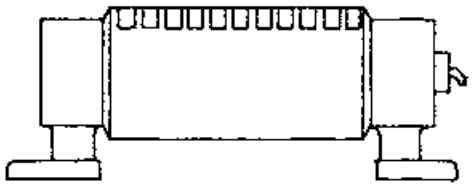

Inclinable Magnetic Chuck

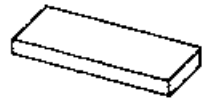

Block gauge

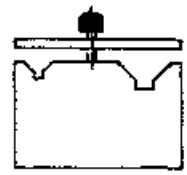

Clamp

(2) Use of the jigs and tools: take the grinding of the block of six faces A, B, C, D, E, F. For example:

a. Under 200mm:

* Grinding of the first basic face, or the surface grindingof A and B,

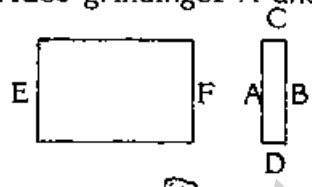

* Grinding of C and D

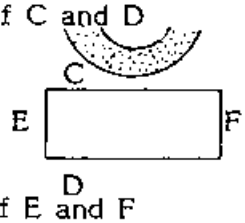

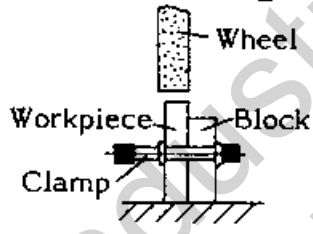

* Grinding of E and F

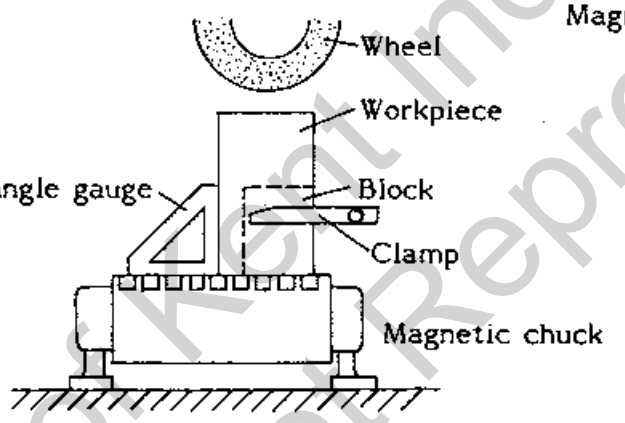

b. Over 200mm:

* Grinding of the first basic face or A,
* Grinding of C and D: turn the inclinable magnetic chuck into 90°

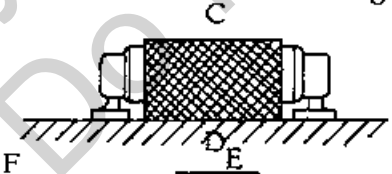

* Grinding of E and F

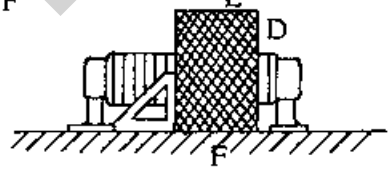

(3) Precaution: The grinding of right angle depends on the patience and clever mindedness of the operator for its precision. For inatance, whether the burrs after grinding is done well, whether the tools are kept clean, whether the work table are kept clean, the accuracy of the angle gauge, etc. all will have a direct influence over the precision of the product.

Property of Kent Industrial USA
Do Not Reproduce

N. COMPLETE KNOCKDOWN DRAWINGS & PARTS LISTS
****

WHEN ORDERING PARTS, PLEASE MENTION:

1. MACHINE MODEL & SERIAL NUMBER,
2. ITEM NUMBER,
3. PARTS NUMBER AND NAME,
4. QUANTITY.

Property of Kent Industrial USA
Do Not Reproduce

KGS—410,515,620 AH(AHD) COLUMN ASS'Y

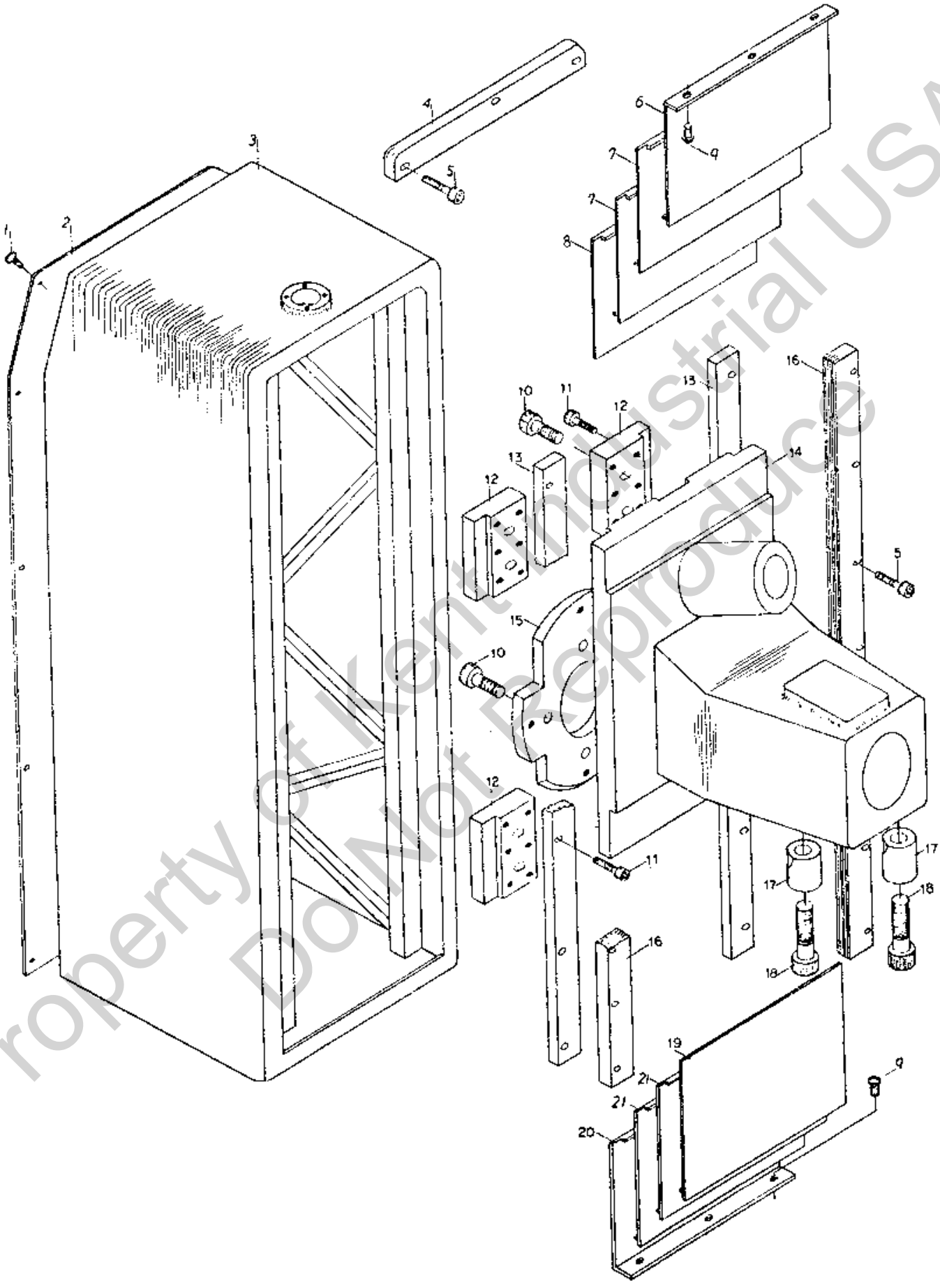

Property of Kent Industrial USA
Do Not Reproduce

Column

Index No.	Parts No. KGS-410	KGS-515	KGS-620	Parts Name	Q'ty
1.	F70303	"	"	Round head screw	10
2.	41106	51452	51452	Column rear cover	1
3.	41402	51402	51402	Column	1
4.	41411	51447	51447	Column front cover	1
5.	F10408	"	"	Socket head-cap screw	17
6.	41465	51476	51476	Dust shield	1
7.	41466	51477	51477	Dust shield	2
8.	41467	51478	51478	Dust shield	1
9.	F40304	"	"	Round head screw	6
10.	F10814	"	"	Socket head-cap screw	8
11.	F10610	"	"	Socket head-cap screw	40
12.	41403	"	"	Mounting plates	4
13.	41404	51411	51411	Vertical slide way	2
14.	41401	51401	62401	Spindle housing	1
15.	41406	51479	51479	Spindle motor mounting plate	1
16.	41405	51446	51446	Shield guide	2
17.	41407	"	"	Spindle stopper	2
18.	F11018	"	"	Socket head-cap screw	2
19.	41408	51448	51448	Dust shield	1
20.	41410	51450	51450	Dust shield	2
21.	41466	51449	51449	Dust shield	2

Property of Kent Industrial USA
Do Not Reproduce

KGS—410,515,620AH(AHD) CROSS FEED ASS'Y

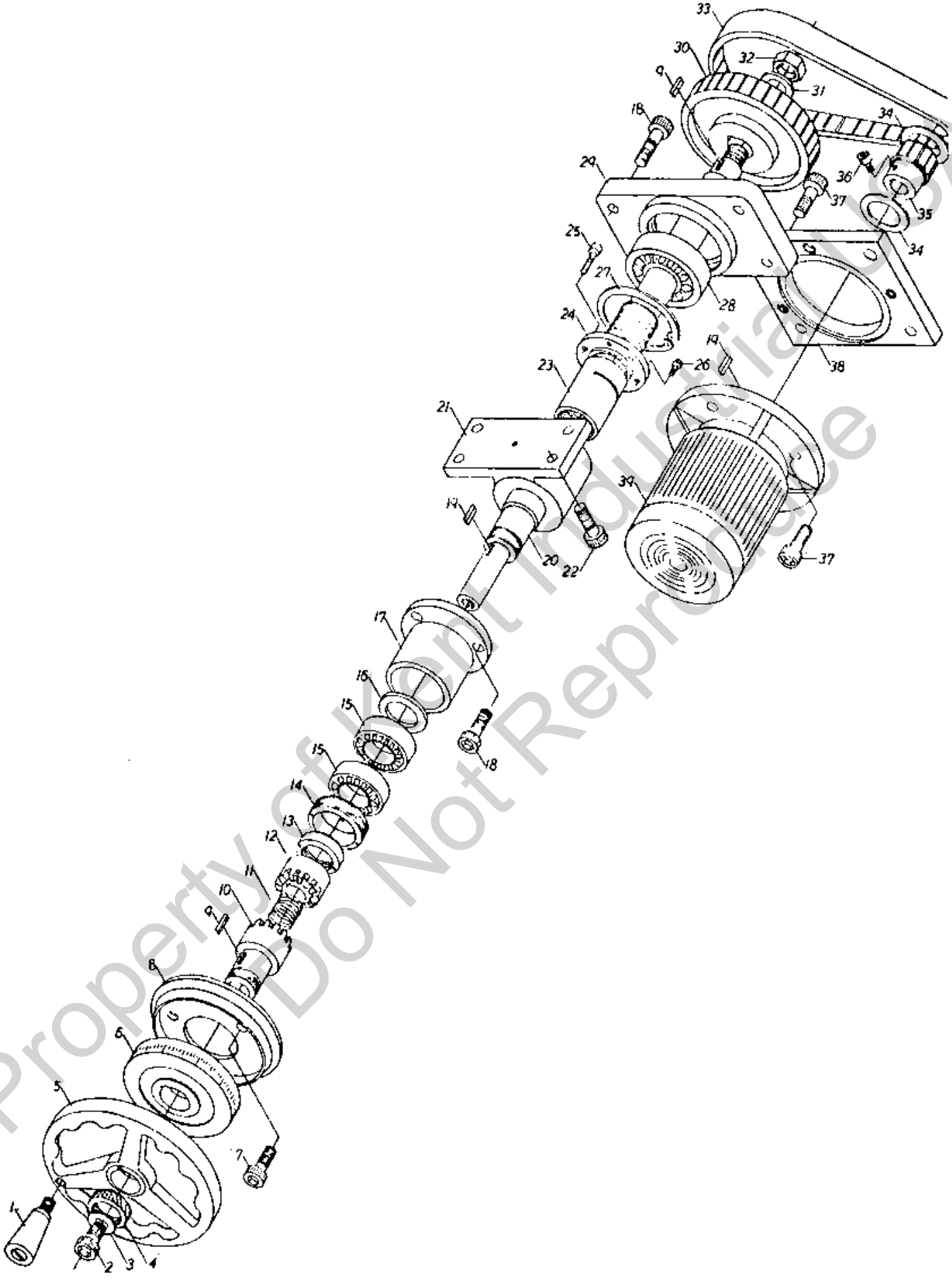

Property of Kent Industrial USA
Do Not Reproduce

Cross Feed Assy'

Index No.	Parts No. KGS-410	KGS-515	KGS-620	Parts Name	Q'ty
1.	A0301N	"	"	Hand grip	1
2.	F10607	"	"	Socket head-cap screw	1
3.	W11006	"	"	Washer	1
4.	41349	"	"	Nut	1
5.	A0202B	"	"	Hand wheel	1
6.	41305	"	"	Graduation dial	1
7.	F10405	"	"	Socket head-cap screw	3
8	41306	"	"	Dial holder	1
9.	W31520	"	"	Key	2
10.	41303	"	"	Clutch	1
11.	41308	"	"	Spring	1
12.	41307	"	"	Clutch	1
13.	41313	"	"	Locking nut	1
14.	41309	"	"	Bearing retainer	1
15.	B7206	"	"	Bearing	2
16.	41311	"	"	Washer	1
17.	41310	"	"	Bearing housing	1
18.	F10610	"	"	Socket head-cap screw	7
19.	W31515	"	"	Key	2
20.	41312	51311	62311	Cross feed lead screw	1
21.	41345	"	"	Cross feed nut base	1
22.	F10608	"	"	Socket head-cap screw	4
23.	41346	"	"	Lead screw nut	1
24.	41347	"	"	Backlash adjuster	1
25.	F10508	"	"	Socket head-cap screw	3
26.	F10505	"	"	Socket head-cap screw	3
27.	W60R52	"	"	Snap ring	1
28.	B1205	"	"	Bearing	1
29.	41348	"	"	Bearing housing	1
30.	41341	"	"	Timing belt pulley	1
31.	W12008	"	"	Washer	1
32.	W21008	"	"	Hexagonal nut	1
33.	D30004	"	"	Timing belt	1
34.	41343	"	"	Timing belt pulley flange	2
35.	41342	"	"	Timing belt pulley	1
36.	F10403	"	"	Socket head-cap screw	1
37.	F10514	"	"	Socket head-cap screw	8
38.	41344	"	"	Cross feed motor fixed plate	1
39.	M2105	"	"	Cross feed motor	1

Property of Kent Industrial USA
Do Not Reproduce

KGS—515,620AH(AHD) CROSS FEED DISTANCE CONTROL MECHANISM

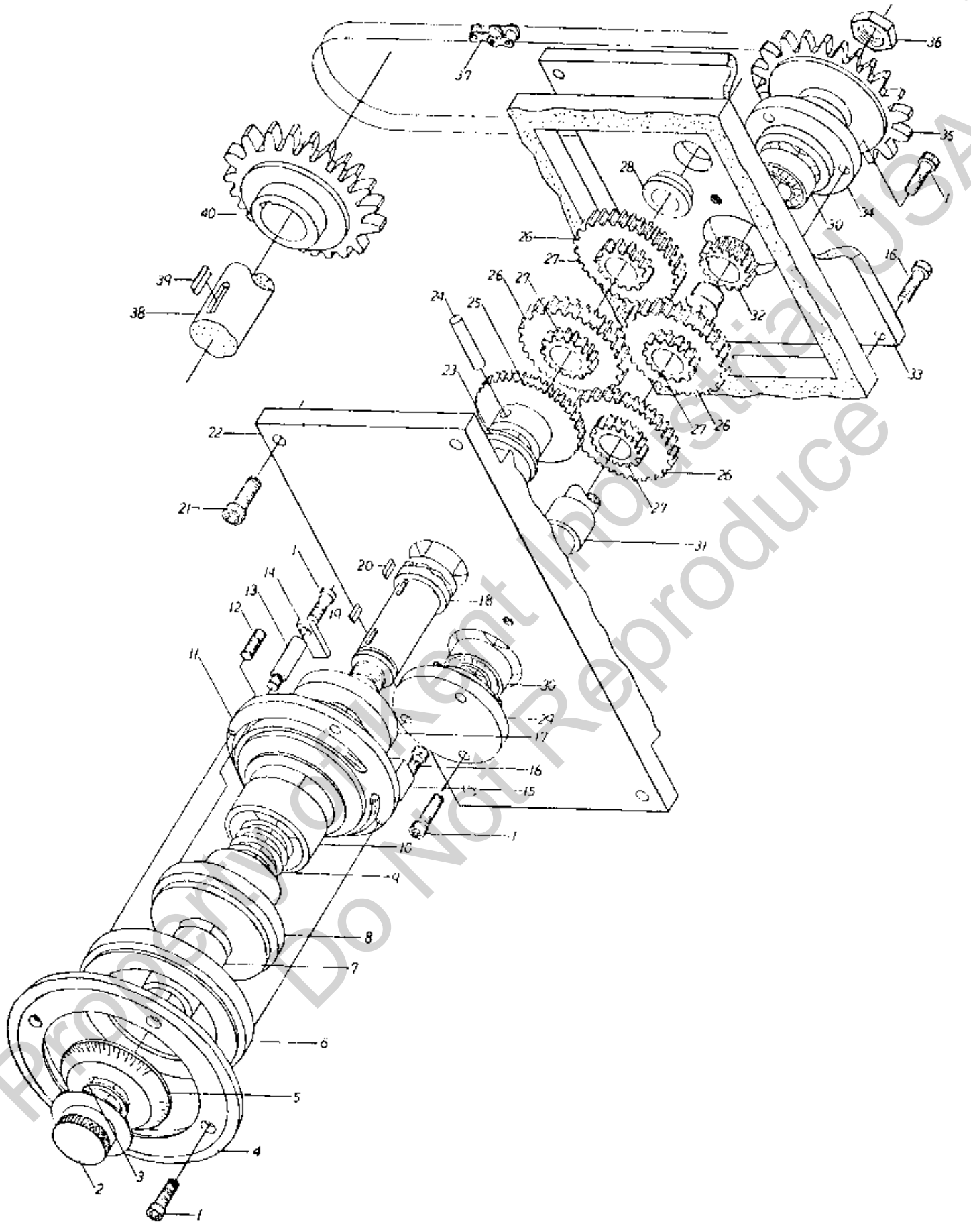

Property of Kent Industrial USA
Do Not Reproduce

KGS-515AH(AHD), 620AH(AHD) Cross Feed Distance Control Mechanism

Index No.	Parts No. KGS-515	Parts No. KGS-620	Parts Name	Q'ty
1.	F10407	"	Socket head-cap screw	11
2.	51322	"	Lock nut	1
3.	W60S185	"	Snap ring	1
4.	51330	"	Fix disk	1
5.	51326	62326	Graduation dial	1
6.	51327	"	Control plate	1
7.	51334	"	Copper bush	1
8.	51329	"	Control plate	1
9.	41308	"	Spring	1
10.	51333	"	Copper bearing	1
11.	51328	"	Control bush	1
12.	F80407	"	Hexagonal fixed screw	2
13.	51335	"	Fixed screw	1
14.	51337	"	Stopper	1
15.	51336	"	Stopper	1
16.	F10412	"	Socket head-cap screw	5
17.	51331	"	Spacer	1
18.	51338	"	Shaft	1
19.	W31515	"	Key	1
20.	W31510	"	Key	1
21.	F10150	"	Socket head-cap screw	4
22.	51348	"	Gear box	1
23.	51379	"	Copper bearing	1
24.	W42630	"	Taper pin	1
25.	51342	"	Gear	1
26.	51386	"	Gear	1
27.	51341	"	Speed reducing gear	4
28.	51378	"	Copper bearing	1
29.	51343	"	Bearing housing	1
30.	B6002ZZ	"	Bearing	2
31.	51339	"	Shaft	1
32.	52340	"	Gear	1
33.	51347	"	Gear box cover	1
34.	51344	"	Bearing housing	1
35.	51346	62346	Chain gear	1
36.	W21004	"	Hexagonal nut	1
37.	D20002	"	Chain	1
38.	51311	62311	Cross feed shaft	1
39.	W31725	"	Key	1
40.	51345	"	Chain gear	1

Property of Kent Industrial USA
Do Not Reproduce

KGS-410AH(AHD) LONG HANDFEED ASSY

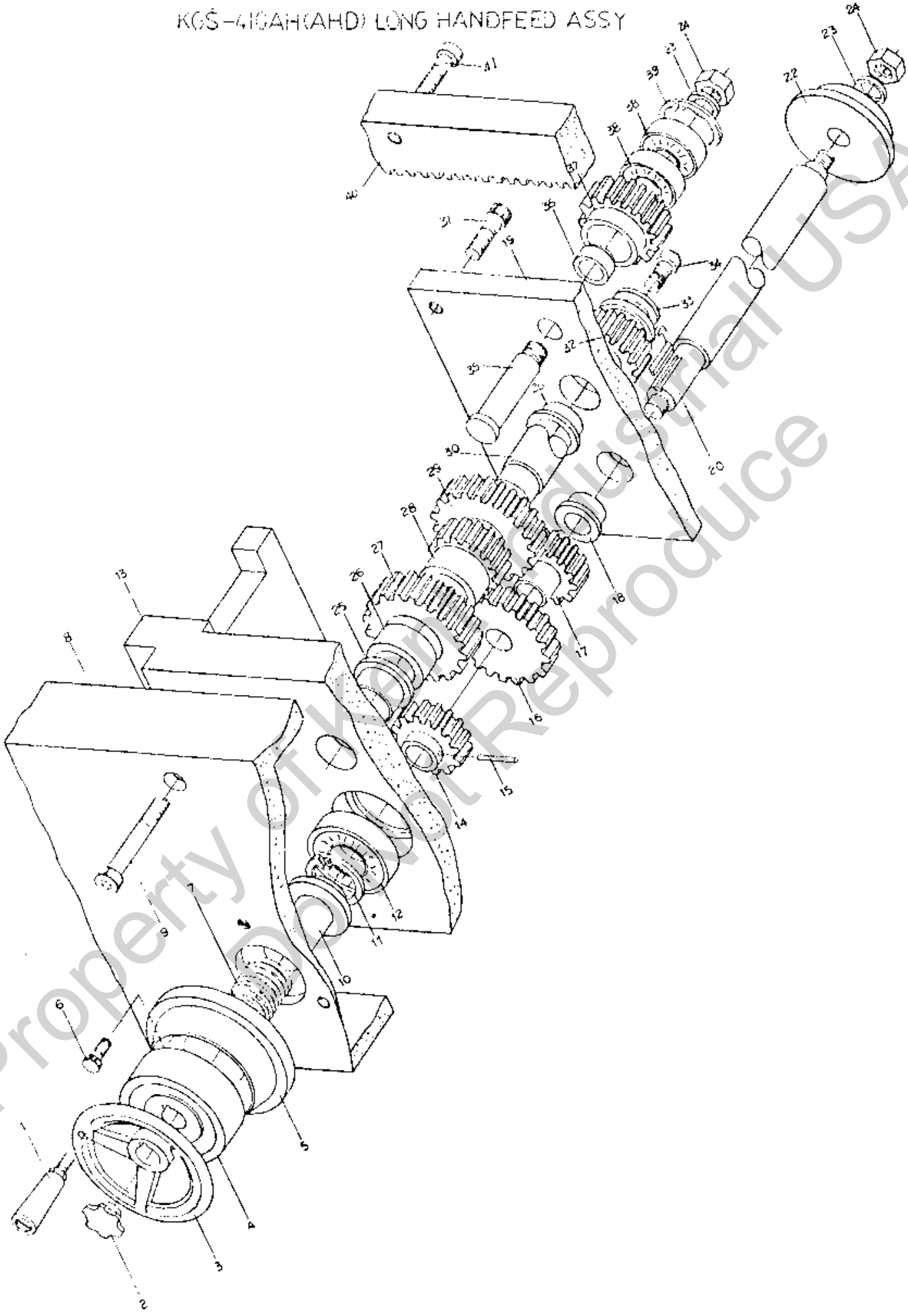

Property of Kent Industrial USA
Do Not Reproduce

KGS-410AH(AHD) Longitudinal Handfeed Assy'

Index No.	Parts No.	Parts Name	Q'ty
1.	A0301N	Hand grip	1
2.	A0101N	Nut	1
3.	A0201	Hand wheel	1
4.	41254	Dial	1
5.	41255	Dial holder	1
6.	F10406	Socket head-cap screw	3
7.	41253	Spring	1
8.	41103A	Base plate	1
9.	F10640	Socket head-cap screw	6
10.	41252	Sleeve	1
11.	W60R47	Snap ring	1
12.	B6204F	Bearing	1
13.	41203	Gear housing	1
14.	41247	Gear	1
15.	W42634	Taper pin	1
16.	41248	Gear	1
17.	41250	Gear	1
18.	41245	Bush	1
19.	41256	Gear housing plate	1
20.	41202	Shaft	1
21.	W42535	Key	1
22.	41243	Spacer	1
23.	W11008	Washer	2
24.	W21008	Hexagonal nut	2
25.	41244	Bush	2
26.	41258	Spacer	1
27.	41257	Gear	1
28. 29.	41249,41251	Gear	1
30.	41246	Shaft	1
31.	F10510	Socket head-cap screw	4
32.	41241	Gear	1
33.	41242	Washer	1
34.	F11010	Socket head-cap screw	1
35.	41239	Shaft	1
36.	41240	Washer	1
37.	41238	Gear	1
38.	B6203F	Bearing	2
39.	W60R40	Snap ring	1
40.	41204	Rack	1
41.	F10616	Socket head-cap screw	8

Property of Kent Industrial USA
Do Not Reproduce

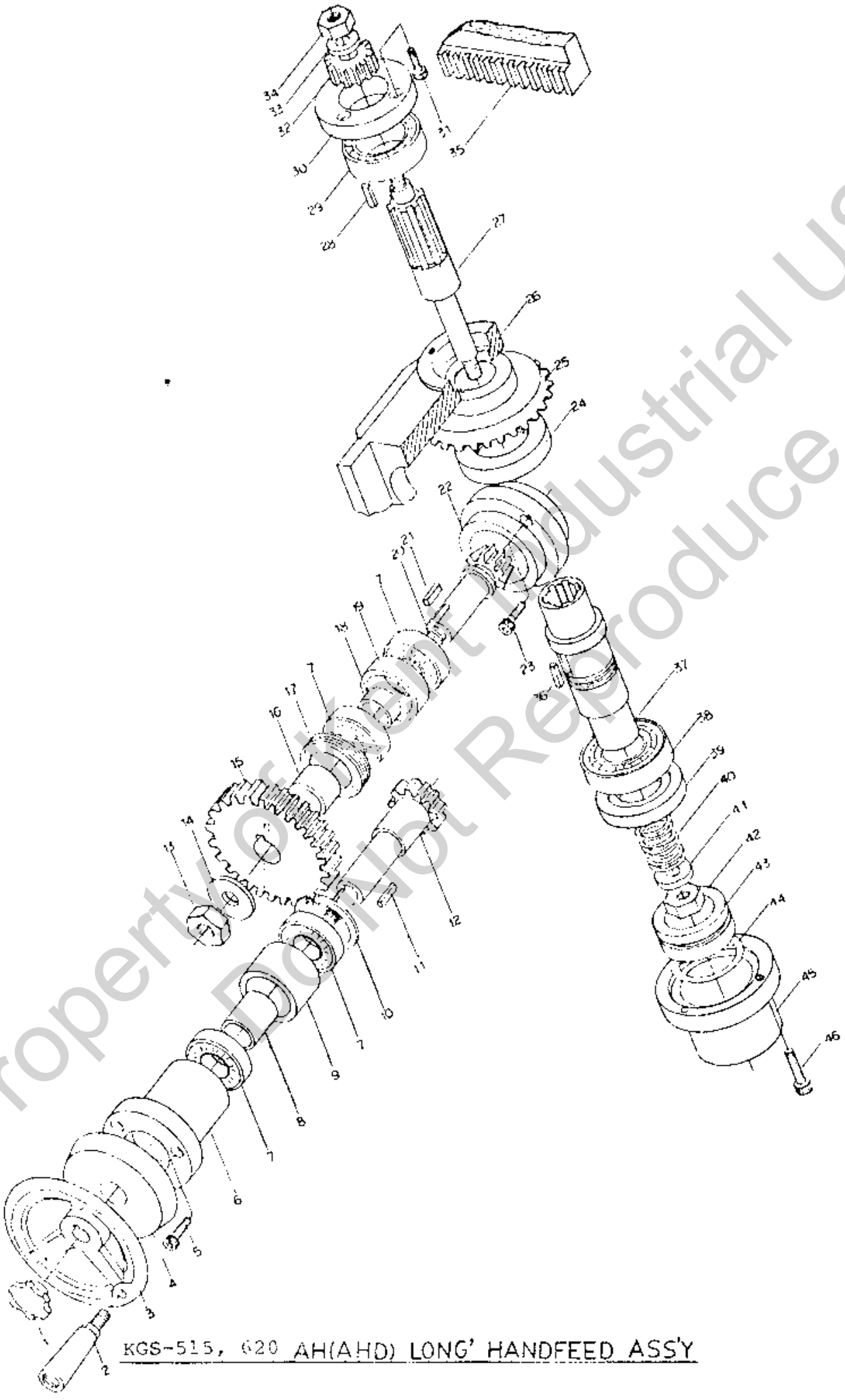

KGS-515, 620 AH(AHD) LONG' HANDFEED ASS'Y

Property of Kent Industrial USA
Do Not Reproduce

KGS-515AH(AHD), 620AH(AHD) Longitudinal Handfeed Assy'

Index No.	Parts No. KGS-515	Parts No. KGS-620	Parts Name	Q'ty
1.	A0101N	"	Nut	1
2.	A0301N	"	Hand grip	1
3.	A0201B	"	Hand wheel	1
4.	51212	"	Fixed indicator	1
5.	F10407	"	Socket head-cap screw	3
6.	51213	"	Bearing housing	1
7.	B6004F	"	Bearing	4
8.	51216	"	Spacer	1
9.	51215	"	Spacer	1
10.	W60R47	"	Snap ring	1
11.	W31520	"	Key	1
12.	51217	"	Pinion gear shaft	1
13.	W21010	"	Hexagonal nut	1
14.	W11010	"	Washer	1
15.	51219	"	Gear	1
16.	51222	"	Spacer	1
17.	51224	"	Nut	1
18.	51226	"	Spacer	1
19.	51225	"	Spacer	1
20.	51227	"	Drive gear shaft	1
21.	W31520	"	Key	1
22.	51223	"	Bearing housing	1
23.	F10408	"	Socket head-cap screw	3
24.	51236	"	Nut	1
25.	51235	"	Bevel gear	1
26.	51221	"	Gear housing	1
27.	51230	"	Gear hub shaft	1
28.	W31520	"	Key	1
29.	B6207F	"	Bearing	1
30.	51231	"	Bearing cover	1
31.	F10408	"	Socket head-cap screw	3
32.	51229	"	Gear	1
33.	W12008	"	Spring washer	1
34.	W21008	"	Hexagonal nut	1
35.	51243	62243	Rack	1
36.	W31725	"	Key	1
37.	51232	"	Gear shaft	1
38.	B6208F	"	Bearing	1
39.	51237	"	Stop ring	1

Property of Kent Industrial USA
Do Not Reproduce

Index No.	Parts No. KGS-515	KGS-620	Parts Name	Q'ty
40.	51238	"	Spring	1
41.	51239	"	Washer	1
42.	W21008	"	Hexagonal nut	1
43.	51240	"	Piston	1
44.	G20P44	"	O-ring	2
45.	51242	"	Cylinder	1
46.	F10612	"	Socket head-cap screw	3

Property of Kent Industrial USA
Do Not Reproduce

KGS—410,515,620AH DOWN FEED ASS'Y

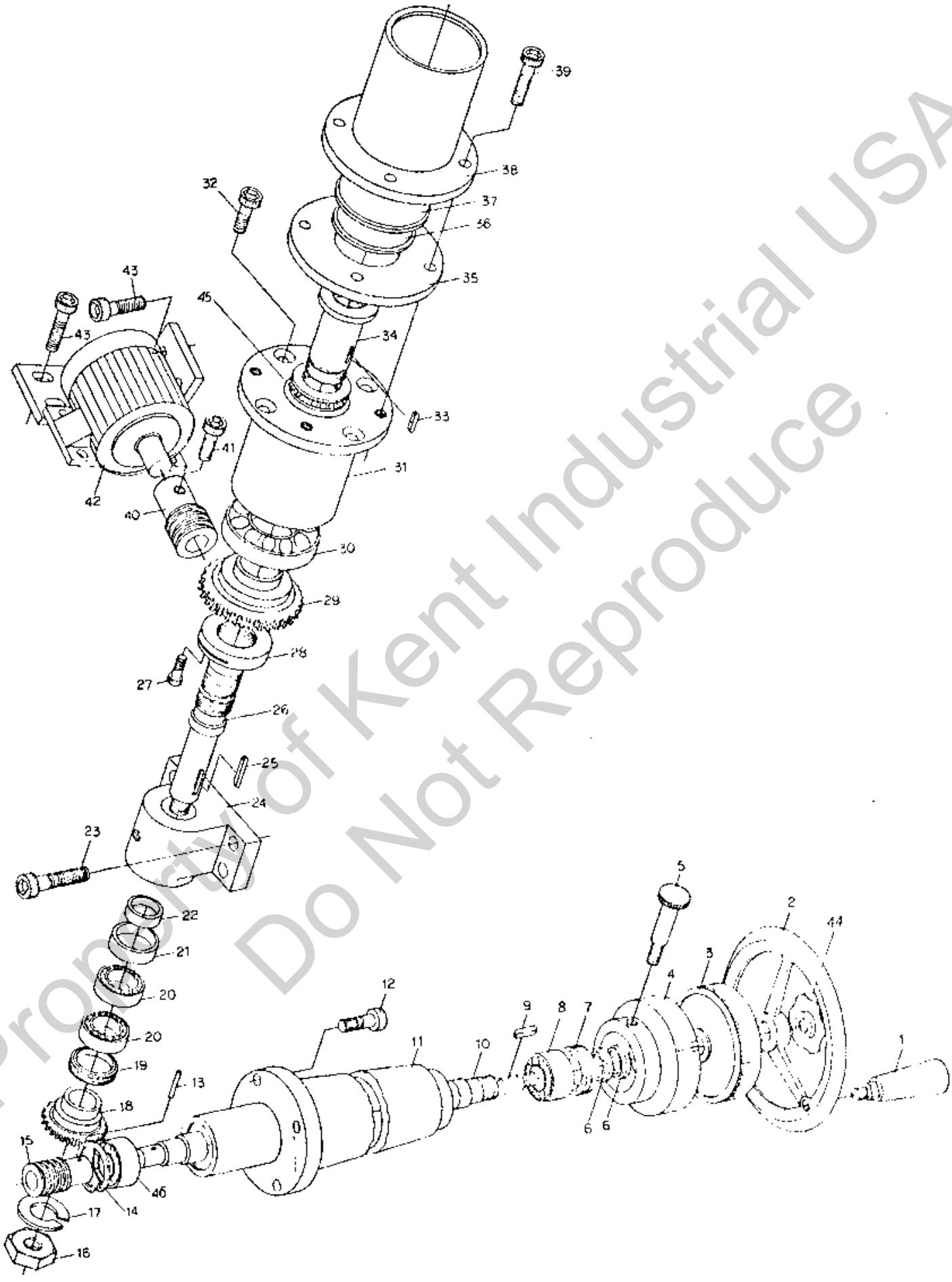

Property of Kent Industrial USA
Do Not Reproduce

KGS-410AH, 515AH, 620AH Down Feed Ass'y

Index No.	Parts No. KGS-410	KGS-515	KGS-620	Parts Name	Q'ty
1.	A0301N	"	"	Hand grip	1
2.	A0201	"	"	Hand wheel	1
3.	41420	"	"	Graduation dial	1
4.	41421	"	"	Fixed indicator	1
5.	41444	"	"	Adjusting screw	1
6.	41463	"	"	Nut	2
7.	41462	"	"	Nut	1
8.	B3204	"	"	Bearing	1
9.	W31530	"	"	Key	1
10.	41422	51420	62420	Shaft	1
11.	41416	51426	62426	Shaft housing	1
12.	F10614	"	"	Socket head-cap screw	4
13.	W43530	"	"	Spring pin	1
14.	W60R47	"	"	Snap ring	1
15.	41423	"	"	Worm	1
16.	W21012	"	"	Nut	1
17.	W12012	"	"	Spring washer	1
18.	41424	"	"	Worm gear	1
19.	41434	"	"	Nut	1
20.	B6205	"	"	Bearing	2
21.	41435A	"	"	Spacer	1
22.	41435B	"	"	Spacer	1
23.	F10814	"	"	Socket head-cap screw	4
24.	41433	"	"	Downfeed nut base	1
25.	W31735	"	"	Key	1
26.	41431	"	"	Downfeed lead screw	1
27.	F10406	"	"	Socket head-cap screw	1
28.	41443	"	"	Nut	1
29.	41442	"	"	Worm	1
30.	B6210	"	"	Bearing	1
31.	41430	"	"	Bearing housing	1
32.	F10508	"	"	Socket head-cap screw	4
33.	W31725	"	"	Key	1
34.	41432	"	"	Lead screw nut	1
35.	41449	"	"	Spacer	1
36.	41446	"	"	Downfeed leadscrew housing	1
37.	41447	"	"	Downfeed leadscrew housing	1
38.	41448	"	"	Downfeed leadscrew housing	1
39.	F10510	"	"	Socket head-cap screw	1

Property of Kent Industrial USA
Do Not Reproduce

Index No.	Parts No. KGS-410	KGS-515	KGS-620	Parts Name	Q'ty
40.	41441	"	"	Worm	1
41.	F10403	"	"	Socket head-cap screw	1
42.	M2204	M2210	M2210	Motor	1
43.	F10613	"	"	Socket head-cap screw	8
44.	A0101N	"	"	Nut	1
45.	B51108	"	"	Bearing	1
46.	B2204	"	"	Bearing	1

Property of Kent Industrial USA
Do Not Reproduce

KGS-410.515,620AHD DOWNFEED ASS'Y

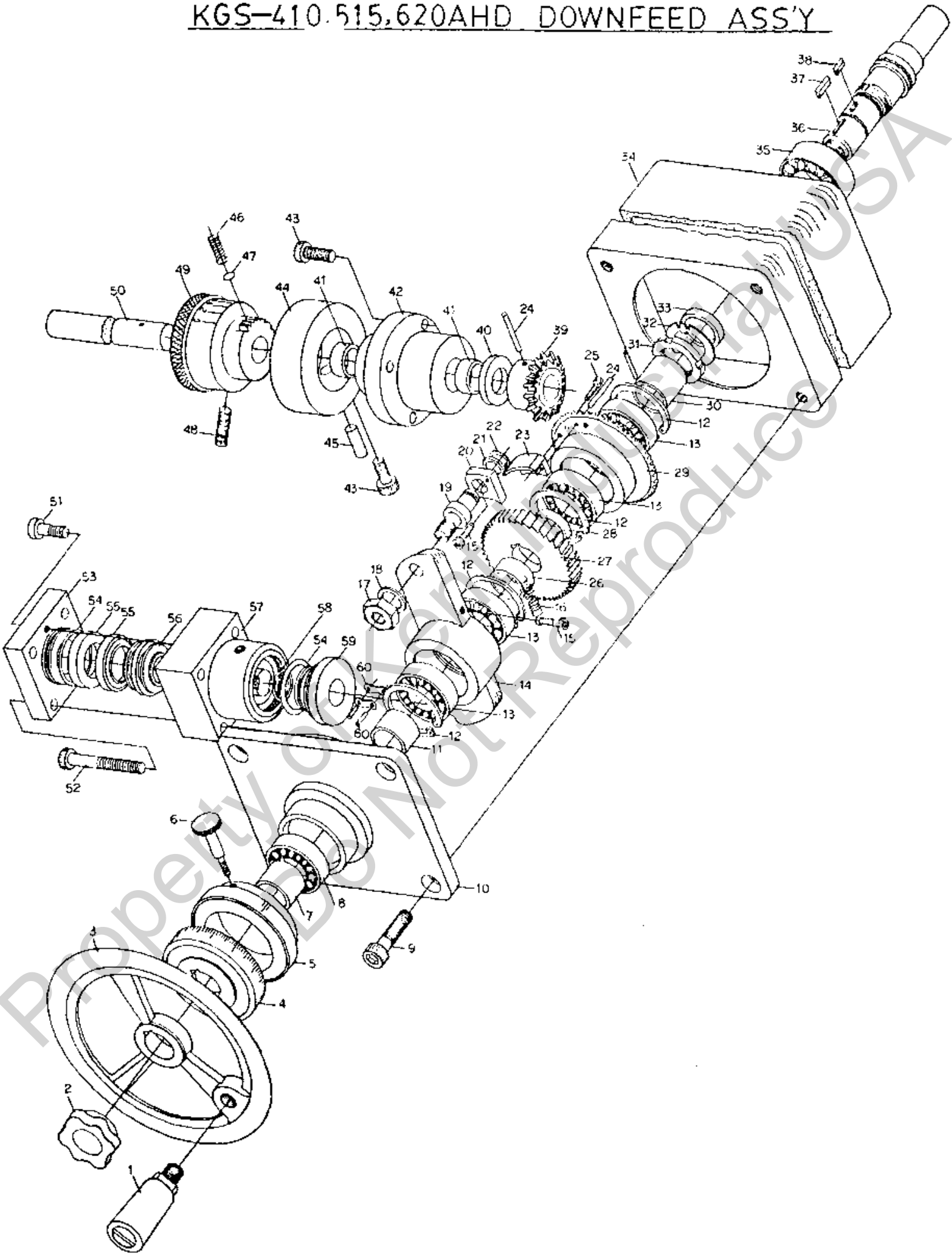

Property of Kenco Industrial USA
Do Not Reproduce

KGS-410AHD, 515AHD, 620AHD Downfeed Ass'y

Index No.	Parts No. KGS-410	KGS-515	KGS-620	Parts Name	Q'ty
1.	A0301N	"	"	Hand grip	1
2.	A0101N	"	"	Nut	1
3.	A0201N	"	"	Hand wheel	1
4.	41420	"	"	Graduation dial	1
5.	41421	"	"	Indicator ring	1
6.	41444	"	"	Lock screw	1
7.	41716	"	"	Spacer	1
8.	B6203	"	"	Bearing	1
9.	F10508	"	"	Socket head-cap screw	4
10.	41706	"	"	Cover	1
11.	41715	"	"	Spacer	1
12.	W60R35	"	"	Snap ring	4
13.	B6003	"	"	Bearing	4
14.	41707	"	"	Transmission arm	1
15.	W5/32'x3/4	"	"	Socket head-cap screw	2
16.	Ø5xØ0.5x23x19.8		"	Spring	1
17.	W21006	"	"	Hexagonal nut	1
18.	W12006	"	"	Spring washer	1
19.	41714	"	"	Shaft	1
20.	41708	"	"	Claw	1
21.	41713	"	"	Spacer	1
22.	W60S10	"	"	Snap ring	1
23.	41711	"	"	Slipper	1
24.	W43426	"	"	Spring pin	3
25.	F10608	"	"	Socket head-cap screw	2
26.	41712	"	"	Spacer	1
27.	41705	"	"	Ratchet gear	1
28.	41710	"	"	Spacer	1
29.	41704	"	"	Bevel gear	1
30.	41717	"	"	Spacer	1
31.	W24AN04	"	"	Check nut	1
32.	W13AW04	"	"	Ratchet washer	1
33.	41709	"	"	Spacer	1
34.	41703	"	"	Gear box	1
35.	B5204	"	"	Bearing	1
36.	41702	51702	62702	Shaft	1
37.	W31530	"	"	Key	1
38.	W31515	"	"	Key	1

Property of Kent Industrial USA
Do Not Reproduce

Index No.	Parts No. KGS-410	KGS-515	KGS-620	Parts Name	Q'ty
39.	41724	"	"	Bevel gear	1
40.	41723	"	"	Spacer	1
41.	41728	"	"	Copper bearing	2
42.	41726	"	"	Fixed bush	1
43.	F10304	"	"	Socket head-cap screw	5
44.	41731	"	"	Fixed indicator	1
45.	W43565	"	"	Spring pin	1
46.	Ø4xØ0.55x7x17		"	Spring	1
47.	Ø4	"	"	Steel ball	1
48.	F70406	"	"	Flat head screw	1
49.	41725	"	"	Incremental indicator dial	1
50.	41722	"	"	Shaft	1
51.	F10306	"	"	Socket head-cap screw	4
52.	F10320	"	"	Socket head-cap screw	2
53.	41720	"	"	Cylinder cover	1
54.	G20P24	"	"	O-ring	2
55.	V22.4	"	"	V-packing	2
56.	41718	"	"	Hydraulic transmission shaft	1
57.	41719	"	"	Cylinder	1
58.	G20P12	"	"	O-ring	1
59.	41721	"	"	Cylinder cover	1
60.	RA-40	"	"	Chain	1

Property of Kent Industrial USA
Do Not Reproduce

KGS—410,515,620AH(AHD) SPINDLE ASS'Y

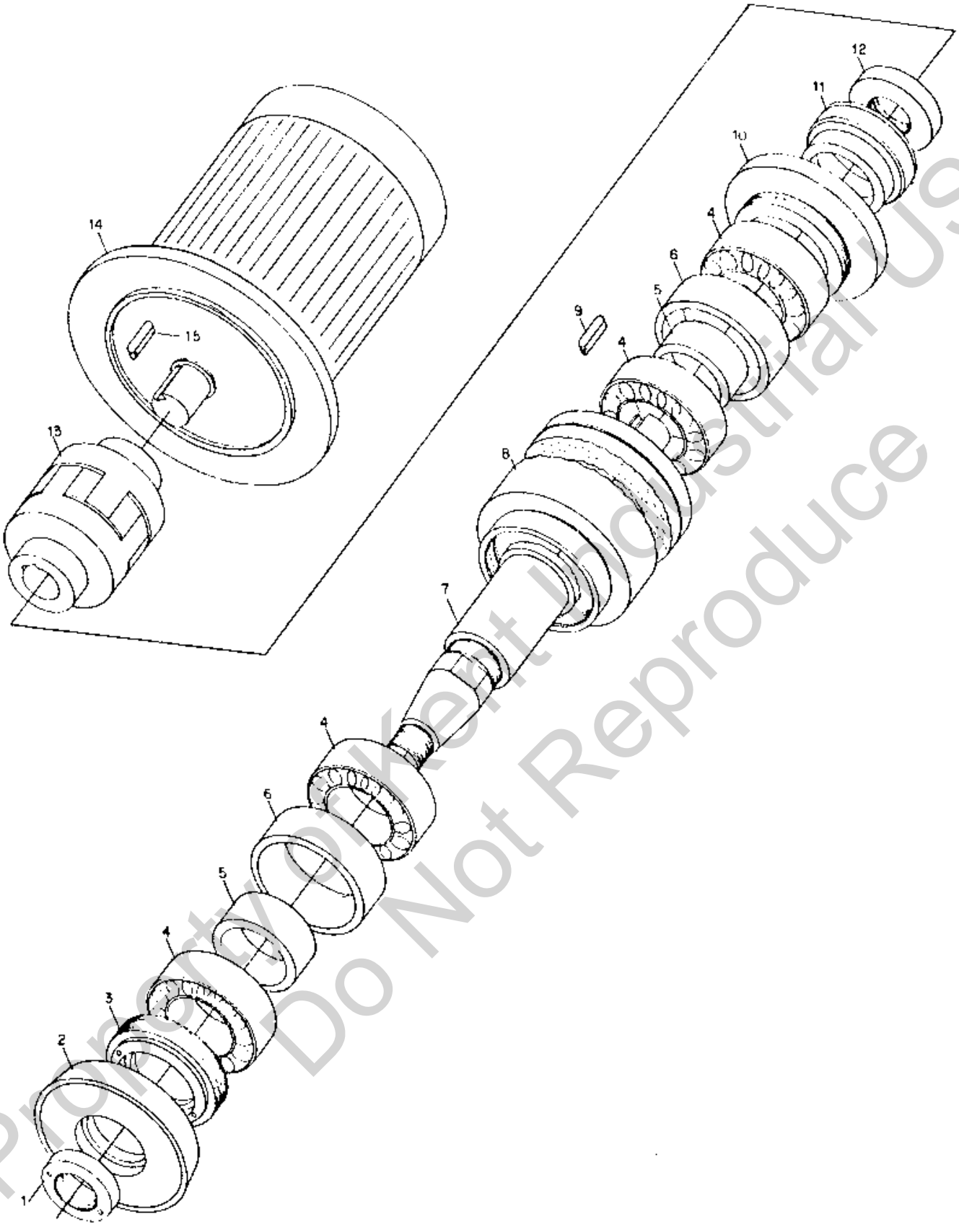

Property of Kent Industrial USA
Do Not Reproduce

KGS-410AH(AHD), 515AH(AHD), 620AH(AHD) Spindle Ass'y

Index No.	Parts No. KGS-410	KGS-515	KGS-620	Parts Name	Q'ty
1.	41510	51510	51510	Spindle cover	1
2.	41509	51509	51509	Spindle cover	1
3.	41508	51508	51508	Spindle nut	1
4.	B7010	B7210	B7210	Bearing	4
5.	41506	51506	51506	Spacer	2
6.	41507	51507	51507	Spacer	2
7.	41502	51502	62502	Spindle shaft	1
8.	41501	51501	62501	Spindle housing	1
9.	W31725	W311025	W311025	Key	1
10.	41504	51504	51504	Spindle cover	1
11.	41505	51505	51505	Spacer	1
12.	41503	51503	51503	Spindle nut	1
13.	D71001	D71000	D71000	Coupling	1
14.	M2103	M2113	M2113	Motor	1
15.	W31745	W3110860	"	Key	1

Property of Kent Industrial USA
Do Not Reproduce

KGS-410AH(AHD) CYLINDER ASS'Y

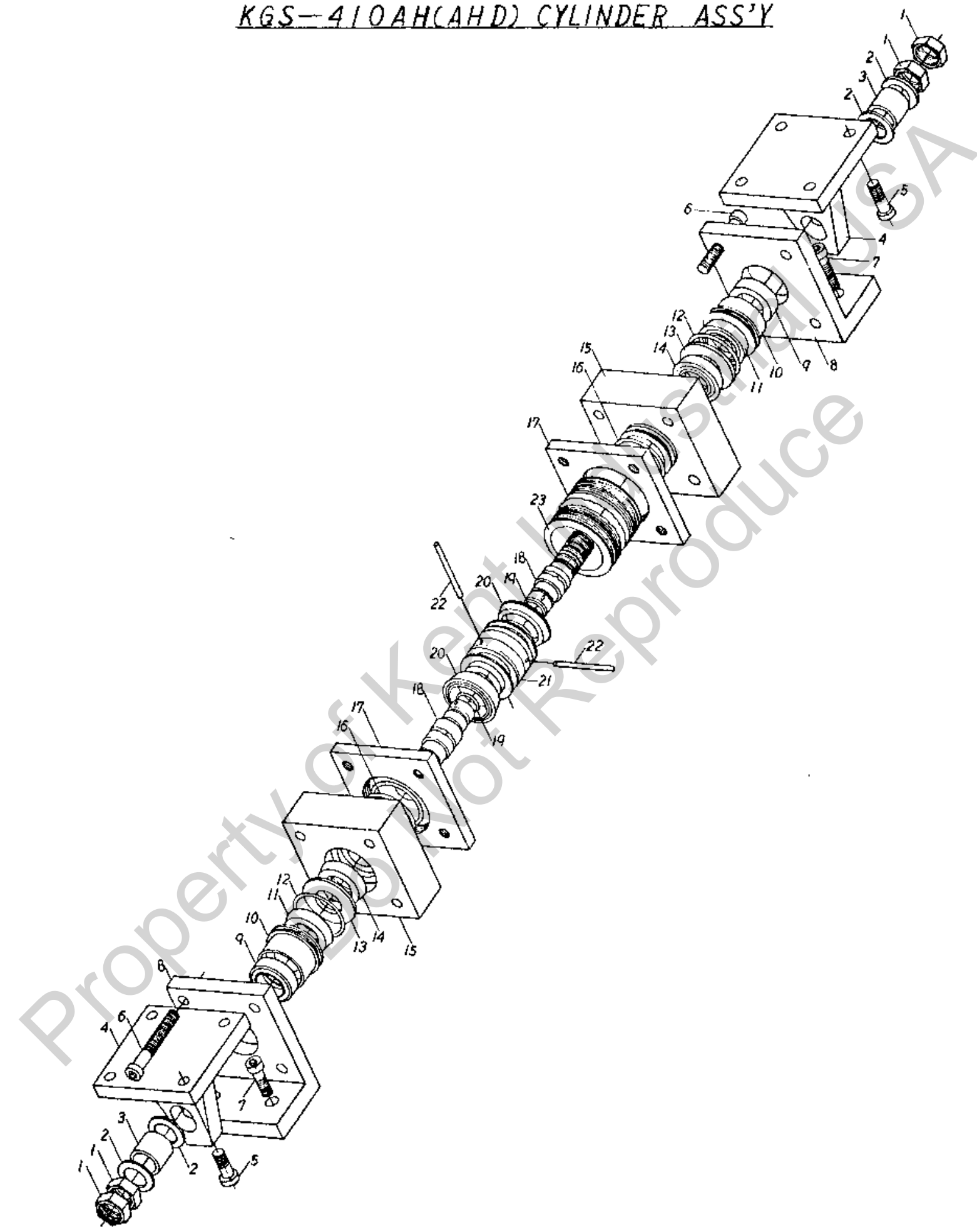

Property of Kent Hydraulics USA
Do Not Reproduce

KGS-410AH(AHD) Cylinder Ass'y

Index No.	Parts No.	Parts Name	Q'ty
1.	W21010	Hexagonal nut	4
2.	W11010	Washer	4
3.	41610	Spacer	2
4.	41228	End bracket	2
5.	F10812	Socket head-cap screw	8
6.	F10523	Socket head-cap screw	8
7.	F10812	Socket head-cap screw	4
8.	41609	Cylinder bracket	2
9.	G40007	Oil seal	2
10.	41613	Oil seal bracket	2
11.	G3UN20	U-packing	2
12.	G20G35	O-ring	2
13.	41605	Washer	2
14.	G3RE20	U-packing	2
15.	41601	Cylinder end cover	2
16.	G20G35	O-ring	2
17.	41608	Cylinder clamper	2
18.	41604	Cylinder rod	2
19.	G20P14	O-ring	2
20.	G3RE30	U-packing	2
21.	41611	Piston	1
22.	W43835	Spring Pin	2
23.	41603	Cylinder Pipe	1

Property of Kent Industrial USA
Do Not Reproduce

KGS-515AH(AHD) CYLINDER ASS'Y

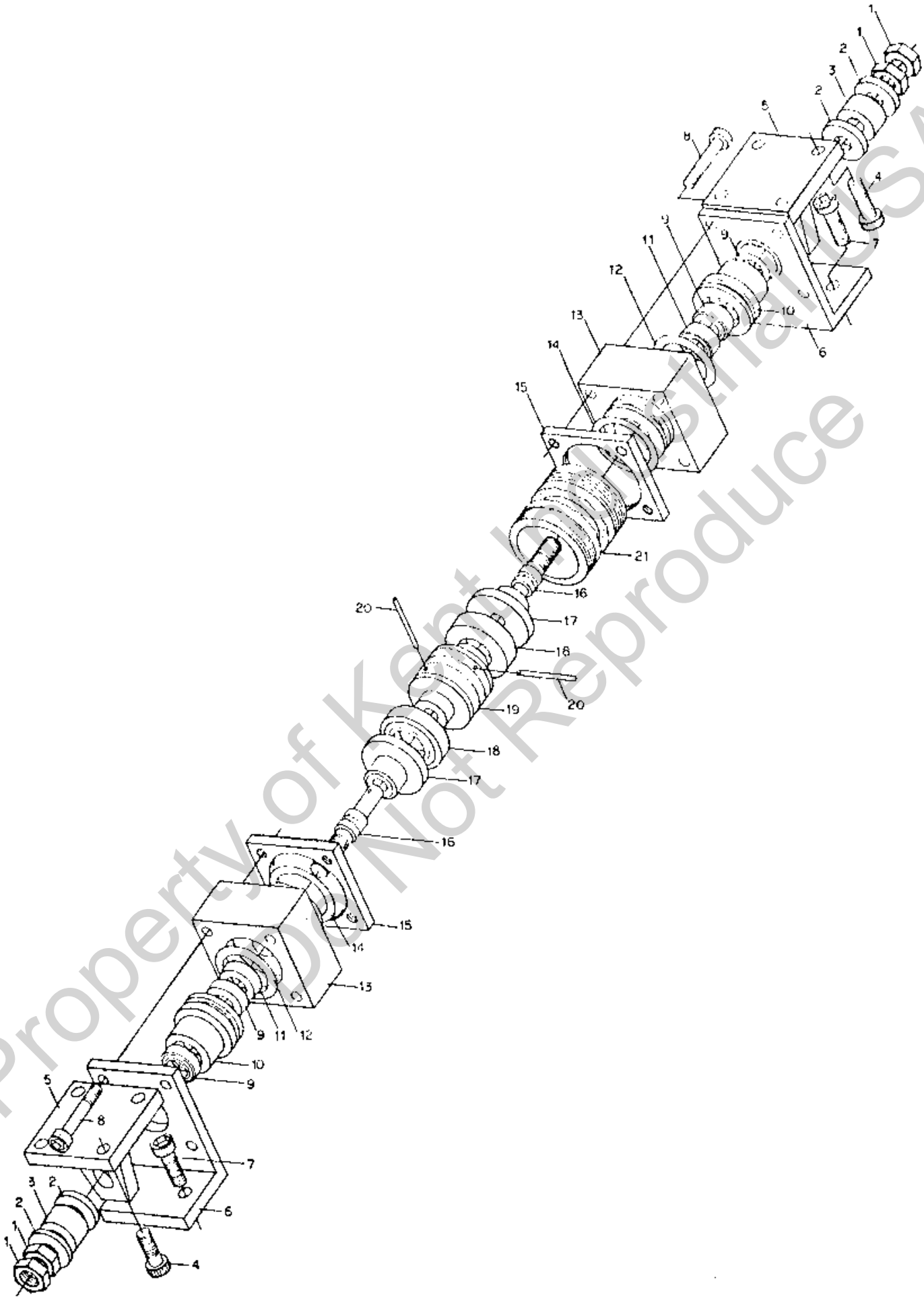

Property of Kent Industrial USA
Do Not Reproduce

KGS-515AH(AHD) Cylinder Ass'y

Index No.	Parts No.	Parts Name	Q'ty
1.	W21012	Hexagonal nut	4
2.	W11012	Washer	4
3.	51609	Washer	2
4.	F10815	Socket head-cap screw	8
5.	51209	End bracket	2
6.	51604	Cylinder bracket	2
7.	F10812	Socket head-cap screw	4
8.	F10526	Socket head-cap screw	8
9.	G3RE25	U-packing	4
10.	51605	Oil seal bracket	2
11.	G3RE25	U-packing	2
12.	G20G40	O-ring	2
13.	51601	End cover	2
14.	G20G45	O-ring	2
15.	51607	Cylinder clamper	2
16.	51602	Cylinder rod	2
17.	51608	Auxiliary	2
18.	G3RE35	U-packing	2
19.	51606	Piston	1
20.	W41845	Pin	2
21.	62602	Cylinder pipe	1

Property of Kent Industrial USA
Do Not Reproduce

KGS-620AH(AHD) CYLINDER ASS'Y

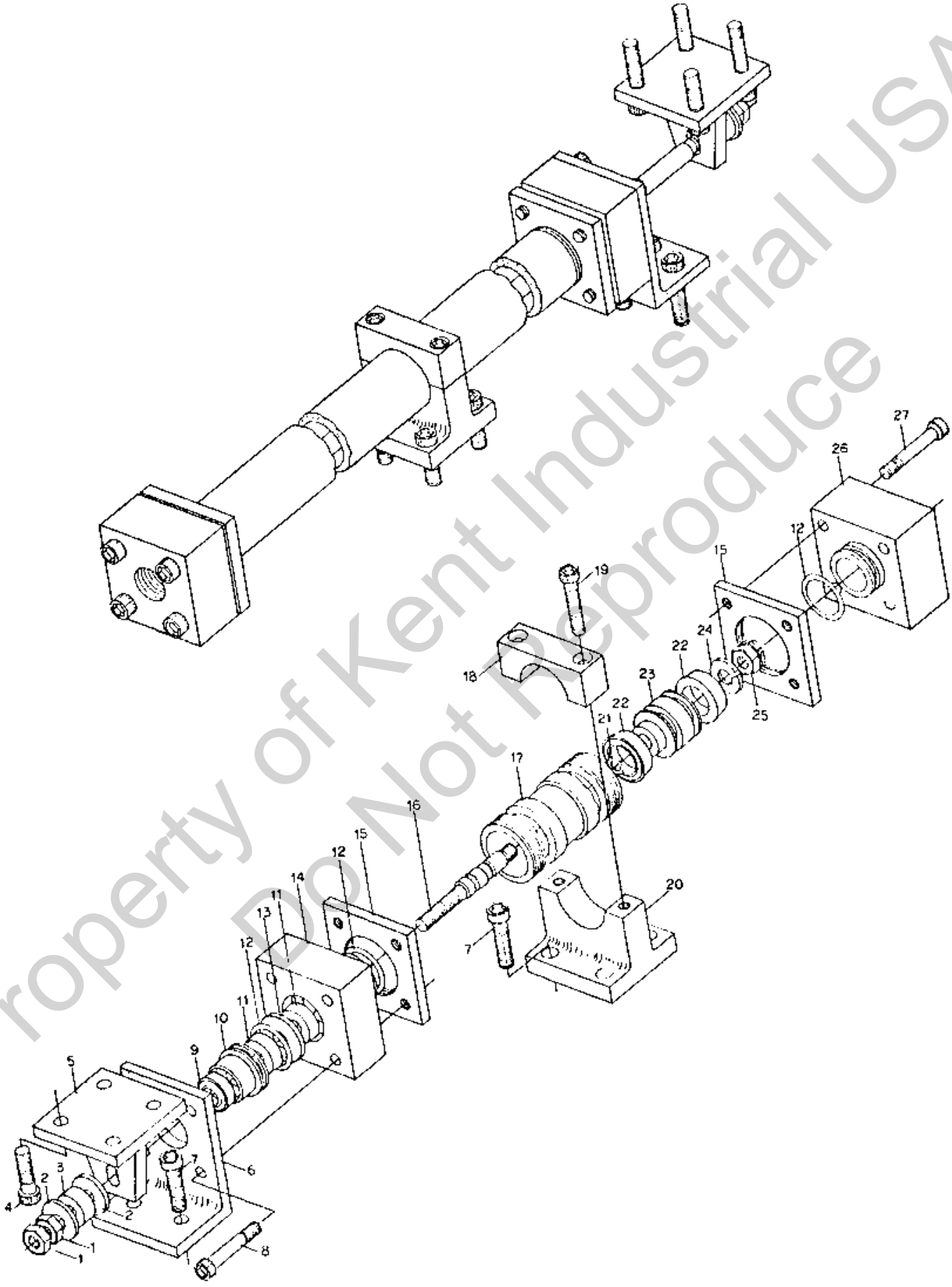

Property of Kent Industrial USA
Do Not Reproduce

KGS-620AH(AHD) Cylinder Ass'y

Index No.	Parts No.	Parts Name	Q'ty
1.	W21010	Hexagonal nut	4
2.	W11010	Washer	4
3.	41610	Spacer	2
4.	F10812	Socket head-cap screw	8
5.	41228	End bracket	2
6.	41609	Cylinder bracket	2
7.	F10812	Socket head-cap screw	12
8.	F10523	Socket head-cap screw	8
9.	G40007	Oil seal	2
10.	41613	Oil seal bracket	2
11.	G3RE20	U-packing	4
12.	G20G35	O-ring	6
13.	41605	Washer	2
14.	41601	Cylinder end cover	2
15.	41608	Cylinder clamper	4
16.	62603	Cylinder rod	2
17.	62602	Cylinder pipe	2
18.	62605	Fixed cover	2
19.	F10412	Socket head-cap screw	4
20.	62604	Fixed stand	2
21.	G20P14	O-ring	2
22.	G3RE30	U-packing	4
23.	62604	Piston	2
24.	W12010	Spring washer	2
25.	W14010	Set nut	2
26.	62601	Cylinder end cover	2
27.	F10518	Socket head-cap screw	8

Property of Kent Industrial USA
Do Not Reproduce

KGS—410,515,620AH(AHD)VALVE ASS'Y

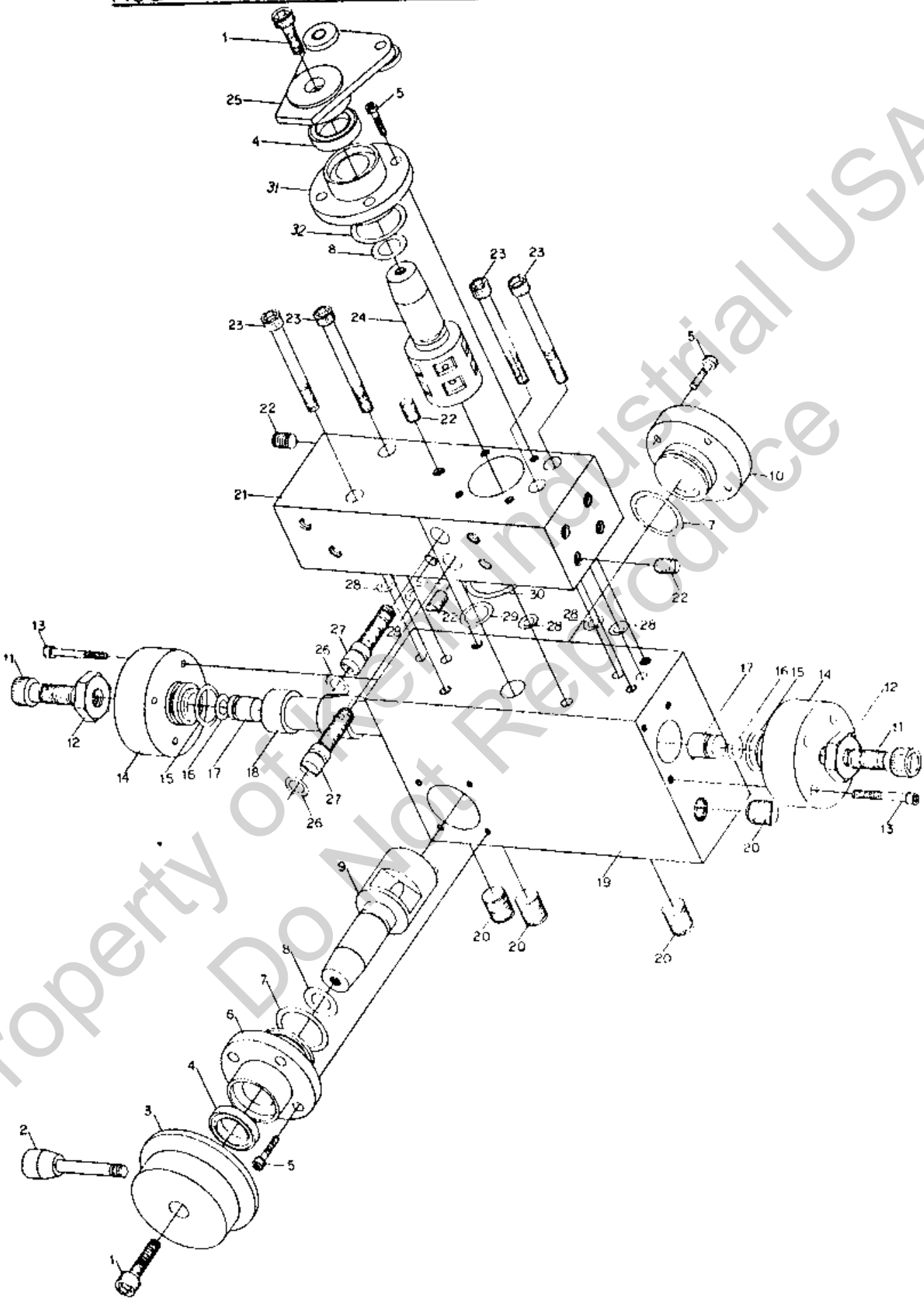

Property of Kem Industrial USA
Do Not Reproduce

KGS-410AH(AHD), 515AH(AHD), 620AH(AHD) Valve Ass'y

Index No.	Parts No. KGS-410	KGS-515	KGS-620	Parts Name	Q'ty
1.	F10405	"	"	Socket head-cap screw	1
2.	A24011	"	"	Flow control lever	1
3.	41630	"	"	Flow control knob	1
4.	177SC	"	"	Oil seal	2
5.	F10303	"	"	Socket head-cap screw	8
6.	30640	30640	62616	Ring retainer	2
7.	G20P22	G20P22	G20P26	O-ring	2
8.	G20P11	G20P11	G20P11	O-ring	2
9.	51614	51614	62614	Flow control valve	1
10.	30638	"	62615	Side cover	1
11.	F10510	"	"	Socket head-cap screw	2
12.	W21005	"	"	Nut	2
13.	F10307	"	"	Socket head-cap screw	8
14.	30635	"	"	Side cover	2
15.	G20P16	"	"	O-ring	2
16.	G20P7	"	"	O-ring	2
17.	30641	"	"	Adjusting shaft	2
18.	51613	51613	62613	Pivot piston	1
19.	51610	51610	62610	Valve body	1
20.	F20904	F20904	F21204	Set screw	4
21.	51611	51611	62611	Direction valve body	1
22.	F20302	"	"	Set screw	12
23.	F10416	"	"	Socket head-cap screw	4
24.	51612	"	"	Direction control shaft	1
25.	41625	"	"	Direction control arm	1
26.	G20P9	"	"	O-ring	2
27.	51615	"	"	Adjusting screw	2
28.	G20P4	"	"	O-ring	5
29.	G20P16	"	"	O-ring	1
30.	G20P26	"	"	O-ring	1
31.	30640	"	"	Ring retainer	1
32.	G20P22	"	"	O-ring	1

Property of Kent Industrial USA
Do Not Reproduce

KGS—410AH OIL TANK ASS'Y

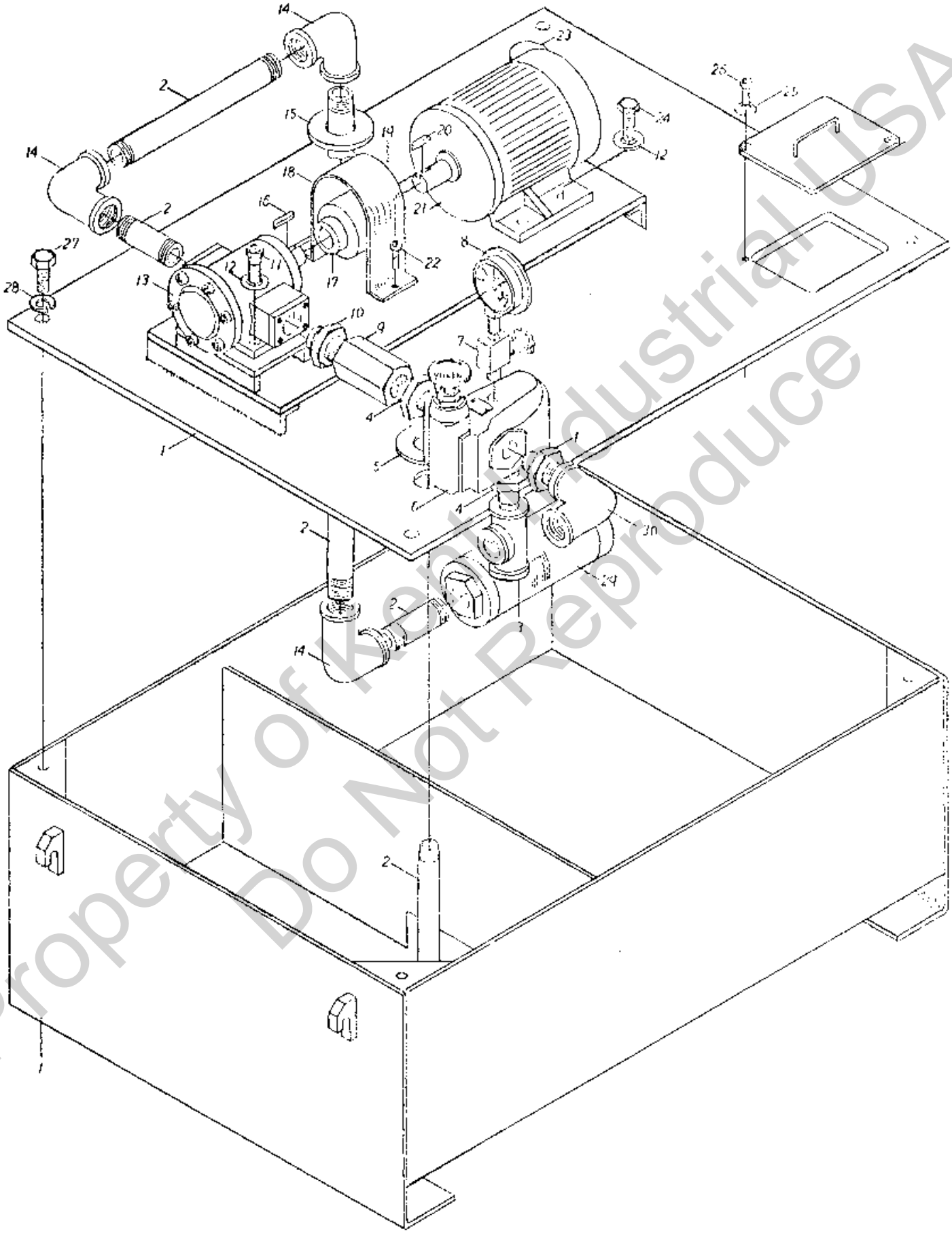

Property of Kent Industrial USA
Do Not Reproduce

KGS-410AH Oil Tank Ass'y

Index No.	Parts No.	Parts Name	Q'ty
1.	41614	Oil tank	1
2.	41631	Hydraulic hoses	5
3.	H42606	Tee joint	1
4.	H4230606	Neple	3
5.	41109	Washer	1
6.	H33002	Relief valve	1
7.	H31002	Gauge valve	1
8.	H20001	Pressure gauge	1
9.	H32001	Check valve	1
10.	H4230606	Neple	1
11.	F10608	Socket head-cap screw	4
12.	W12006	Spring washer	8
13.	H10002	Hydraulic pump	1
14.	H42108	Elbow	3
15.	41110	Washer	1
16.	W31520	Key	1
17.	D72002	Chain coupling	1
18.	41115	Protective plate	1
19.	D72002	Chain coupling	1
20.	W31745	Key	1
21.	M2207	Hydraulic motor	1
22.	F10403	Socket head-cap screw	2
23.	A0901	Cover	1
24.	F30608	Hexagonal screw	4
25.	W11004	Washer	2
26.	F10404	Socket head-cap screw	2
27.	F30808	Hexagonal screw	4
28.	W12008	Spring washer	4
29.	G15001	Oil filter	1
30.	H42106	Elbow	1

Property of Kent Industrial USA
Do Not Reproduce

KGS—410AHD OIL TANK ASS'Y

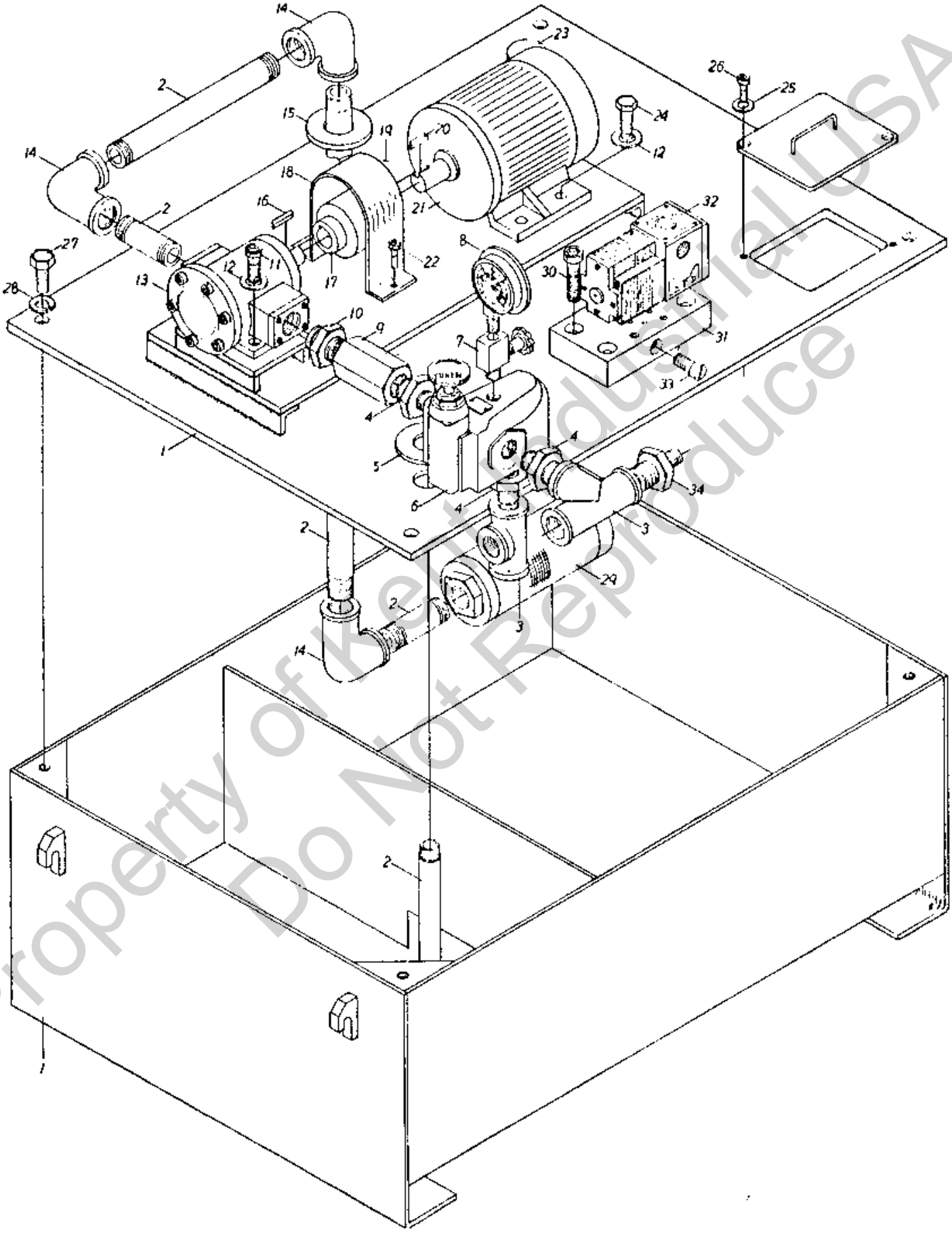

Property of Keltech Industrial USA
Do Not Reproduce

KGS-410AHD Oil Tank Ass'y

Index No.	Parts No.	Parts Name	Q'ty
1.	41614	Oil tank	1
2.	41631	Hydraulic hoses	5
3.	H42606	Tee joint	2
4.	H4230606	Neple	3
5.	41109	Washer	1
6.	H33002	Relief valve	1
7.	H31002	Gauge valve	1
8.	H20001	Pressure gauge	1
9.	H32001	Check valve	1
10.	H4230606	Neple	1
11.	F10608	Socket head-cap screw	4
12.	W12006	Spring washer	8
13.	H10002	Hydraulic pump	1
14.	H42108	Elbow	3
15.	41110	Washer	1
16.	W31520	Key	1
17.	D72002	Chain coupling	1
18.	41115	Protective plate	1
19.	D72002	Chain coupling	1
20.	W31745	Key	1
21.	M2207	Hydraulic motor	1
22.	F10403	Socket head-cap screw	2
23.	A0901	Cover	1
24.	F30608	Hexagonal screw	4
25.	W11004	Washer	2
26.	F10404	Socket head-cap screw	2
27.	W30808	Hexagonal screw	4
28.	W12008	Spring washer	4
29.	G15001	Oil filter	1
30.	F10512	Socket head-cap screw	4
31.	41729	Fixed body	1
32.	H34001	Direction control valve	1
33.	46617	Adjusting screw	1
34.	H4230602	Neple	1

Property of Kent Industrial USA
Do Not Reproduce

KGS—515,620AH OIL TANK ASS'Y

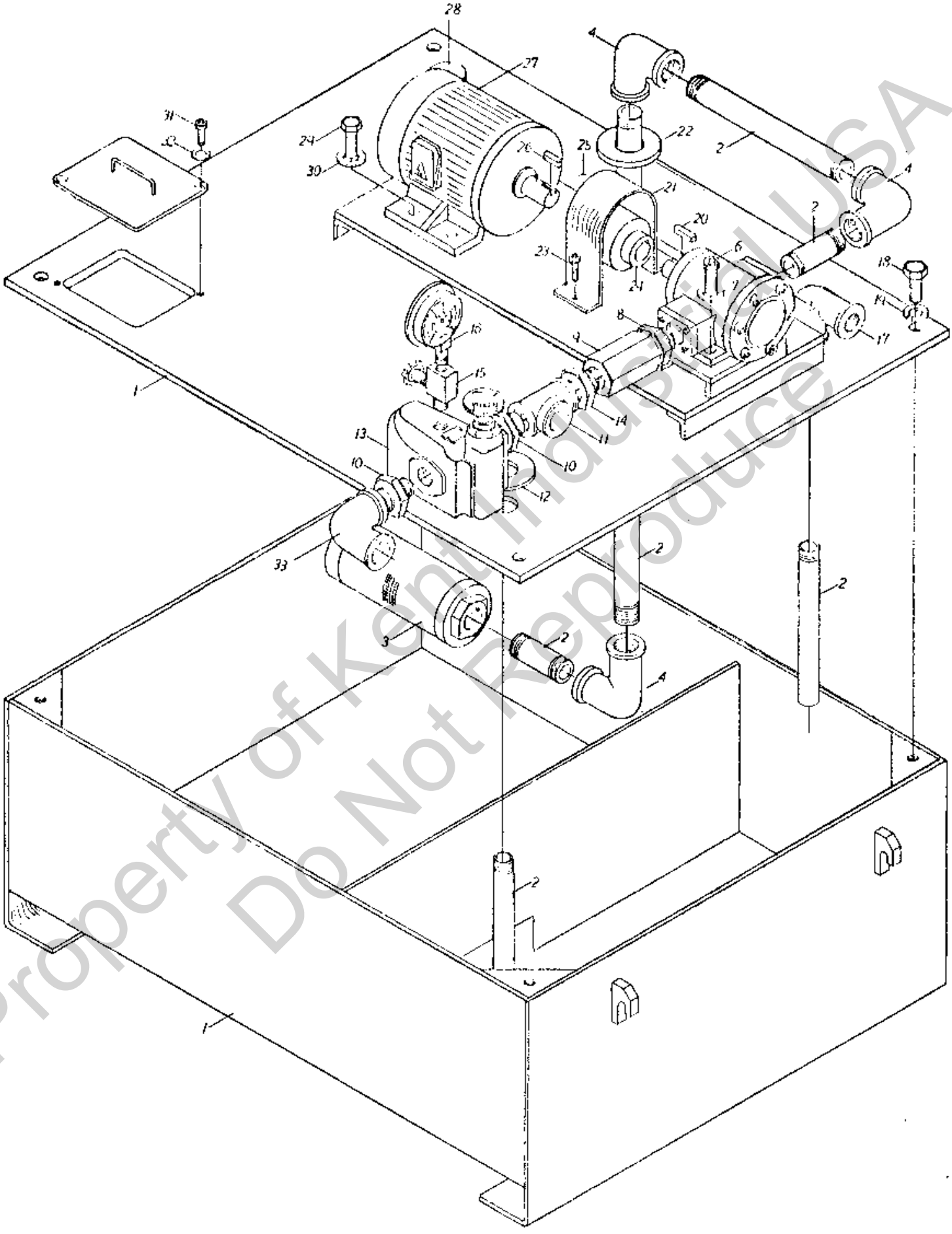

Property of Kent Industrial USA
Do Not Reproduce

KGS-515AH, 620AH Oil Tank Ass'y

Index No.	Parts No. KGS-515	Parts No. KGS-620	Parts Name	Q'ty
1.	51624	62624	Oil tank	1
2.	51625	62625	Hydraulic hoses	6
3.	G15003	G15004	Oil filter	1
4.	H4208	H4212	Elbow	3
5.	H10001	H10005	Hydraulic pump	1
6.	F10608	F10810	Socket head-cap screw	4
7.	W12006	W12008	Spring washer	4
8.	H4230606	H4231008	Neple	2
9.	H32001	H32002	Check valve	1
10.	H4230606	H4230806	Neple	1
11.	H42606	H42608	Tee joint	1
12.	41109	"	Washer	1
13.	H33002	"	Relief valve	1
14.	H4230606	H4230808	Neple	1
15.	H31002	"	Gauge valve	1
16.	H20001	"	Pressure gauge	1
17.	H4206	H4208	Elbow	1
18.	F30808	"	Hexagonal screw	4
19.	W12008	"	Spring washer	4
20.	W315X20	W31730	Key	1
21.	41115	"	Protective plate	1
22.	41110	62607	Washer	1
23.	F10403	"	Socket head-cap screw	2
24.	D72001	D72003	Chain coupling	1
25.	D72001	D72003	Chain coupling	1
26.	W3181060	"	Key	1
27.	M2208	M2211	Hydraulic motor	1
28.	A0901	"	Cover	1
29.	F30610	"	Hexagonal screw	4
30.	W12006	"	Spring washer	4
31.	F10404	"	Socket head-cap screw	2
32.	W11004	"	Washer	2
33.	H42106	H42108	Elbow	1

Property of Kent Industrial USA
Do Not Reproduce

KGS—515,620AHD OIL TANK ASS'Y

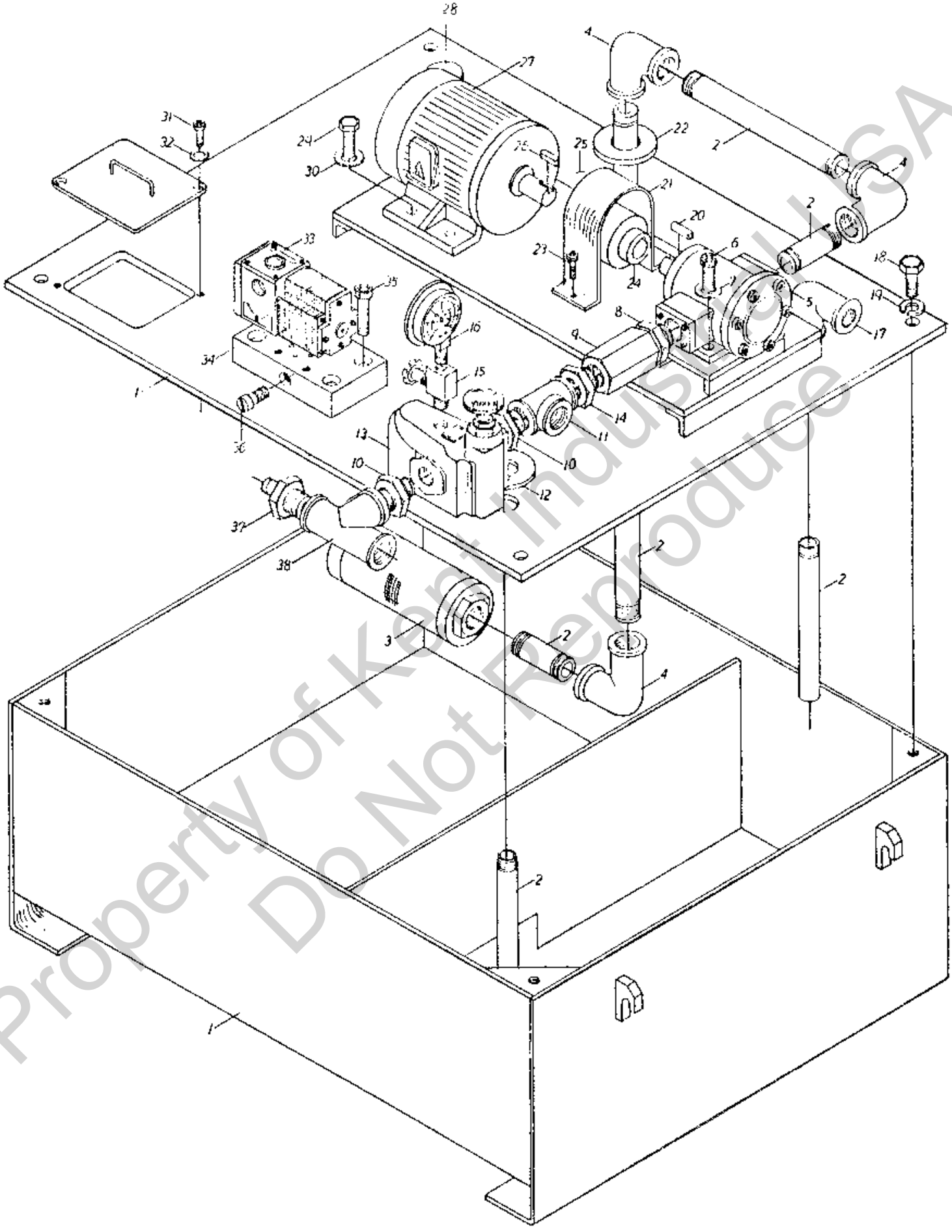

Property of Kent Industries USA
Do Not Reproduce

KGS-515AHD, 620AHD Oil Tank Ass'y

Index No.	Parts No. KGS-515	Parts No. KGS-620	Parts Name	Q'ty
1.	51624	62624	Oil tank	1
2.	51625	62625	Hydraulic hoses	6
3.	G15003	G15004	Oil filter	1
4.	H4208	H4212	Elbow	3
5.	H10001	H10005	Hydraulic pump	1
6.	F10608	F10810	Socket head-cap screw	4
7.	W12006	W12008	Spring washer	4
8.	H4230606	H4231008	Neple	2
9.	H32001	H32002	Check valve	1
10.	H4230606	H4230806	Neple	1
11.	H42606	H42608	Tee joint	1
12.	41109	"	Washer	1
13.	H33002	"	Relief valve	1
14.	H4230606	H4230808	Neple	1
15.	H31002	H31002	Gauge valve	1
16.	H20001	"	Pressure gauge	1
17.	H4206	H4208	Elbow	1
18.	F30808	"	Hexagonal screw	4
19.	W12008	"	Spring washer	4
20.	W315X20	W31730	Key	1
21.	41115	"	Protective plate	1
22.	41110	62607	Washer	1
23.	F10403	"	Socket head-cap screw	2
24.	D72001	D72003	Chain coupling	1
25.	D71001	D72003	Chain coupling	1
26.	W3181060	"	Key	1
27.	M2208	M2211	Hydraulic motor	1
28.	A0901	"	Cover	1
29.	F30610	"	Hexagonal screw	4
30.	W12006	"	Spring washer	4
31.	F10404	"	Socket head-cap screw	2
32.	W11004	"	Washer	2
33.	H34001	"	Direction control valve	1
34.	41729	"	Fixed body	1
35.	F10512	"	Socket head-cap screw	4
36.	46617	"	Adjusting screw	1
37.	H4230602	H4230802	Neple	1
38.	H42606	H42608	Tee joint	1

Property of Kent Industrial USA
Do Not Reproduce

KGS-410AH(AHD), 515AH(AHD), 620AH(AHD) Parallel Dresser Ass'y

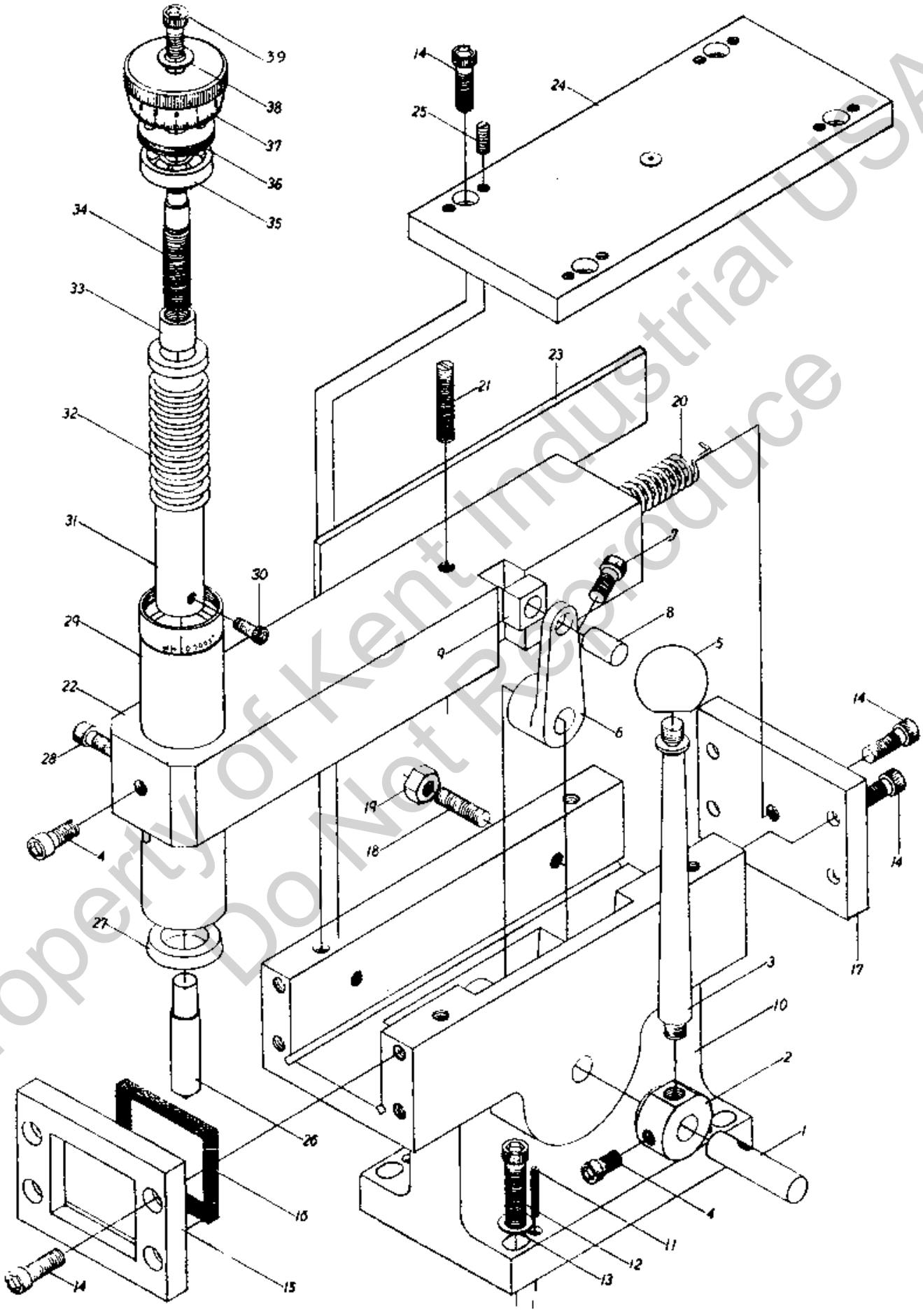

Property of Kent Industrial USA
Do Not Reproduce

Index No.	Parts No.	Parts Name	Q'ty
1.	41812	Shaft	1
2.	41810	Transmission cap	1
3.	41809	Transmission lever	1
4.	F10404	Socket head-cap screw	2
5.	41811	Cap	1
6.	41807	Transmission arm	1
7.	F10403	Socket head-cap screw	1
8.	41813	Shaft	1
9.	41808	Slipper	1
10.	41801	Dresser body	1
11.	F10207	Set screw	4
12.	F10512	Set screw	4
13.	W12005	Spring washer	4
14.	F10408	Socket head-cap screw	13
15.	41803	Front cover	1
16.		Asbestos gasket	1
17.	41804	Back cover	1
18.	F70410	Set screw	2
19.	W21004	Hexagonal nut	2
20.	41825	Spring	1
21.	F70407	Set screw	1
22.	41805	Moving body	1
23.	41806	Adjusting plate	1
24.	41802	Top cover	1
25.	F10305	Set screw	8
26.	41823	Diamond cutter	1
27.	G3RE20	U-packing	1
28.	F10304	Socket head-cap screw	1
29.	41814	Out-holder	1
30.	F10203	Socket head-cap screw	1
31.	41816	Moving muff	1
32.	41824	Spring	1
33.	41817	Nut	1
34.	41819	Transmission rod	1
35.	B6200	Bearing	1
36.	41818	Nut	1
37.	41815	Graduation dial	1
38.	W12004	Spring washer	1
39	F10407	Socket head-cap screw	1

Property of Kent Industrial USA
Do Not Reproduce

O. ELECTRIC PARTS LIST

****

WHEN ORDERING ELECTRIC PARTS, PLEASE MENTION:

1. MACHINE MODEL & SERIAL NUMBER
2. ORDERING NO. & QUANTITY

Property of Kent Industrial USA
Do Not Reproduce

O. Electric Parts List

Contour	Ordering No.	Specification	Code No.	Remarks
	EF2212	260-240-220-200-0 / 70-0-70	AH: Tr. AHD: Tr.	
	EL4242	22Ø 24V Red	AH: RL AHD: RL	
	EL4245	22Ø 24V Red	AHD: GL5	
	EL5245	22Ø 24V Green	AH: PB3, PB5, PB7, PB8 AHD: PB2, PB3, PB4, PB5, PB11	
	EM2241	24VHO-11ERH10/1.7	AH: MC5 AHD: MC5	
	EM2247	24VHO-16ERH10/13	AH: MC2 AHD: MC2	For KGS-410 Hydr. motor
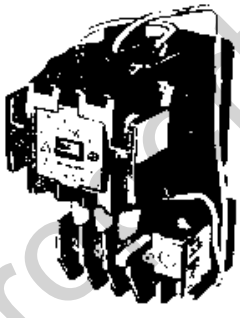	EM2248	24VHO-18ERH18/15	AH: MC1 AHD: MC1	For KGS-410 Spindle motor
	EM2249	24VHO-25ERH18/20	AH: MC1 AHD: MC1	For KGS-515,620 Spindle motor
	EM225[illegible]	24VHO-25ERH18/15	AH: MC2 AHD: MC2	For KGS-515,620 Hydr. motor
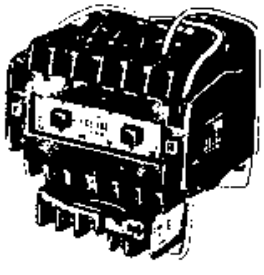	EM3246	24VCL-4ERH10/1.7	AH:MC3 AHD: MC3	

Property of Kent Industrial USA
Do Not Reproduce

Contour	Ordering No.	Specification	Code No.	Remarks
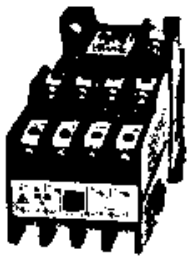	EM4248	24V RA-8E	AH: MC0 AHD: MC0	
	EM5242	24V 2P	AHD: X1, X3, X6, X7	
	EM5244	24V 4P	AHD: X2, X4, X5	
	EN503 $^{0}_{1}$	HRS-21-3P	AHD: Sol. socket	
	EN504 $^{0}_{1}$	HRS-21-4P	AH: Coolant pump socket	
	EN204 $^{0}_{1}$	4P	AH: Hyd. motor socket	
	EN604 $^{0}_{1}$	HRS-35-4P	AHD: Hyd. motor socket	
	ES0512	22Ø Red	AH: PB1 AHD: PB1	
	ES2512	22Ø Red	AH: PB2, PB4, PB6	
	ES2600	22Ø Black	AH: PB9, PB10, PB11, PB12 AHD: PB6, PB7 PB8, PB9	
	ES4612	22Ø 2-positions	AH: SW3 AHD: SW4	
	ES4613	22Ø 3-positions	AHD: SW1, SW2 SW3, SW6, SW7	
	ES4723	22Ø 3-positions	AHD: SW5	
	ES8112	Cam type	AH: SW2	

Property of Kent Industrial USA
Do Not Reproduce

Contour	Ordering No.	Specification	Code No.	Remarks
	ES8700	Cam type switch	AH: SW1 AHD: SW8	
	ES9506	DC24V, 1 SEC	AHD: TM1, TM2	
	EU0002	S2B	AH: S.S.C.U. AHD: S.S.C.U.	
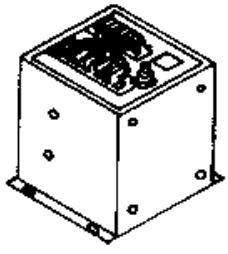	EU1002	Automatic Demagnetizer	AH: A.D. AHD: A.D.	
	EU1003	Digital Counter	AHD: Counter	

Property of Kent Industrial USA
Do Not Reproduce

P. Trouble shooting

1) Grinding defects

Defects	Causes	Remedy
*Chatter marks on grinding surface	Machine not free from vibration	Balance grinding wheel in usual way, Check hydraulic pump & hose, Check spindle motor's coupling, Check levelling screw on machine base,
	Unsteady running of grinding wheel	Dress wheel on periphery on both sides, Re-balance grinding wheel, Check table speed, Reduce downfeed cutting depth, Reduce crossfeed amount,
	Grinding wheel too hard or clogged	Use softer or coarser grinding wheel. Reduce depth of cut (when plunge grinding) Check dressing diamond, Dress grinding wheel more rougher, Dress grinding wheel more frequently,
*Burned mark on grinding surface	Grinding wheel too hard or too fine	Use softer or coarser wheel or reduce peripheral speed of grinding wheel,
	Grinding wheel dull or clogged	Dress grinding wheel coarser, make it rougher,
	Downfeed too great	Reduce downfeed amount, Reduce crossfeed amount,
	Inefficient cooling	Increase flow of coolant, Fill up coolant tank with fresh coolant, Use stronger mixture,

Property of Kent Industrial USA
Do Not Reproduce

2). Operation defects

Defects	Causes	Remedy
*Spindle noisy and run unevenly	Coupling loose	Check the set screw on spindle coupling,
	Spindle fixing screw loose	Loose and re-screw the copper bush A323 & A324, please refer to the drawing of column ass'y
*Cross travel unreversible (for AH & AHD models)	Direction changing limit-switch	Check L21, L23 when backward L11, L13 when forward,
	D.T.U. or delay timer	Check L12 & S21, L22 & &11 should be connected (use AC24V to measure)
	Contactor (cross feed control)	Check 9-0V, 10-0V should have AC24V in between,
	Action angle of cam to limit switch (at bottom of direction control valve)	Loose set screw of cam and adjust to exact position,
*No increment in crossfeed (for AH & AHD models)	Crossfeed inching limit-switch	Measure 76-52 on S.S.C.U. should be connected when limit-switch at "ON" position,
	Variable resistance	Measure 77-78 on S.S.C.U. should have 50K resistance,
	S.S.C.U.	Measure 73-74 should get 220V (when contactor M3 is "ON"), if not, change a new S.S.C.U.,
*Table shock at both end of traverse	Direction control valve	Check the pressure of hydraulic system should be within 12-20kgs/cm^2 Adjust the flow control screw at bottom of direction control valve,
*Table moves only in one direction	Direction control arm	Release the screw and remove the direction control arm into suitable position,
*Downfeed effects irregularly (it feeds sometimes)	Voltage of power source is not enough for solenoid to function	Use 3-phase transformer to get enough voltage (attached on the rear side of machine),
	The action angle of direction changing cam onto limit-switch is not suitable	Check 2-35 limit switch,

Note

Above mentioned Codes No. and Limit-switch No., please refer to our operation manual D. (7). Circuit Diagram, (10). Limit-switch Position.

Property of Kent Industrial USA
Do Not Reproduce

3). For KGS-410AHD, 515AHD, 620AHD

Defect: Auto. downfeed out of work. Check manual downfeed as following procedures:

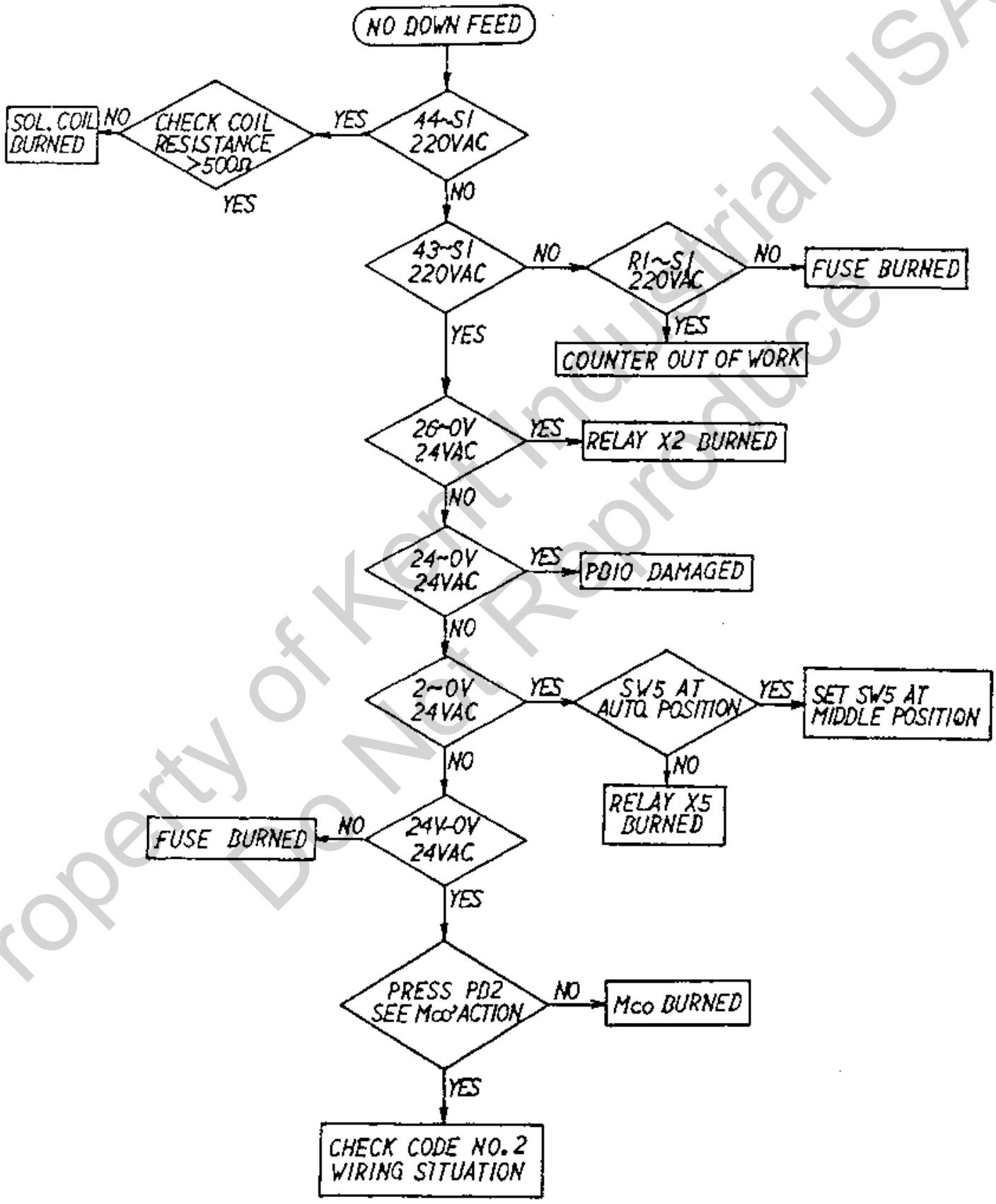

Property of Kent Industrial USA
Do Not Reproduce

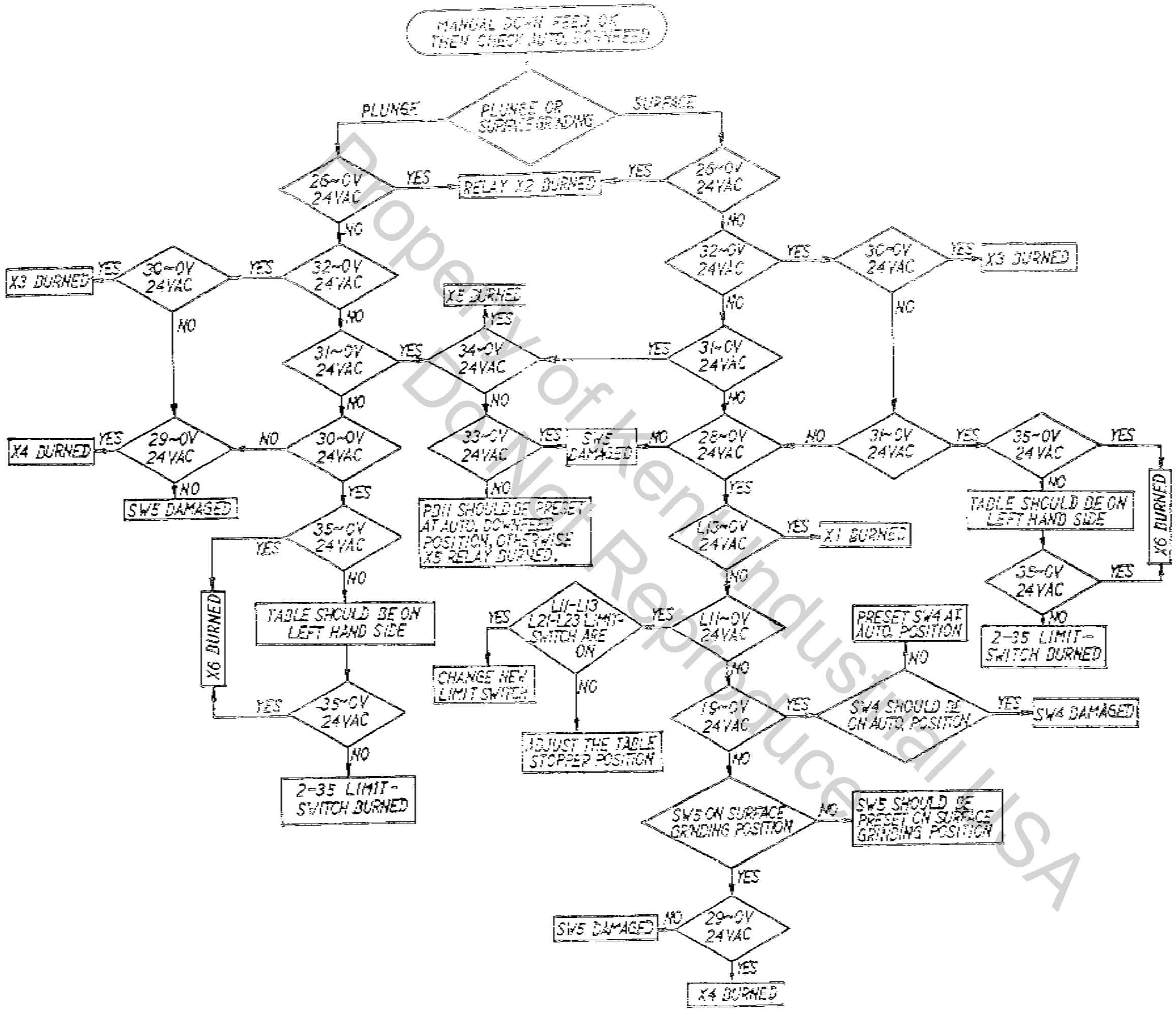

Property of Kent Industrial USA
Do Not Reproduce