CHAPTER 1

OPERATING SAFETY GUIDELINES

1.1 GENERAL SAFETY PRECAUTIONS

(a).Keep all guards and cover plates in place and machine's cabinet door closed.

(b).Keep the machine and work area neat, clean and tidy.

(c).The operator should wear personal protective devices, such as a helmet、safety glasses、working clothes、safety shoes .. etc., which must conform with government industrial safety regulations.

(d).The operator must be a technician who is well trained .

(e).The use of fluid causing poison or corrosion is prohibited.

(f). Never lay anything on the working surfaces of the machine, which may foul rotating or moving parts.

(g). Ensure that the operator knows how to stop the machine before starting it and stop the machine immediately if anything unexpected happens.

(h). Check the load capacity of revolving centers for the current application.

(i). Isolate the machine when leaving it unattended.

(j). Do not touch or reach over moving or rotating parts of the machine.

(k). Do not operate the machine in excess of its rated capacity.

(l). Do not wear gloves、footwear、rings、 watches、 ties or loose sleeved clothing during operation.

(m). Check the running direction of the spindle before operation.

(n). Confirm the function of the emergency stop button is effective.

(o). Do not place hand on spindle or workpiece to stop rotation of the spindle.

(p). Do not cut magnesium metal or high magnesium alloys or any other material which may generate flammable hazards.

(q). During machining, please use cutting fluid to reduce high temperature between cutting tool and workpiece.

(r). When changing the tool or workpiece, please wear gloves for protection.

(s).When emptying cutting tanks the operator must to wear rubber glove for protection .

1.2 OPERATION POTENTIAL HAZARDS OF THE MACHINE

In general, The operational potential hazards of the machine are concluded as follows:

(a) The rotation of the spindle (or tool) can cause the potential cutting hazard.

(b) The movement of the saddle can cause the potential crushing hazard.

(c) The movement of the saddle can cause the potential impacting hazard.

(d) The rotation of the elevating feed hand can cause the potential impacting hazard.

(e) The position of the rotating movable main panel can cause the potential impacting hazard.

(f) The rotation of the transmission belt can cause the potential drawing hazard.

(g) The rotation of the screw can cause the potential drawing hazard.

(h) The high voltage components can cause the potential electric shock hazard .

CHAPTER 2

OVERALL DESCRIPTION OF THE MACHINE

2.1 FUNCTION 、INTENDING USE

The machine is a traditional milling machine. It is assumed that the operator has been properly trained, skilled and is authorized to operate this machine. The machine is well designed for metal milling such as cast iron 、carbon steel、copper、brass、bronze or aluminum. But the flammable material such as magnesium alloy 、carbon bar 、plastic or wood should be prohibited and also prevent to use low flash point cutting fluid and lubricant. According to the machine's design, it can't be used in the potential explosive environment.

2.2 OVERALL DIMENSION AND CAPACITY OF MACHINE

MODEL 2500UM (UNIT:MM)

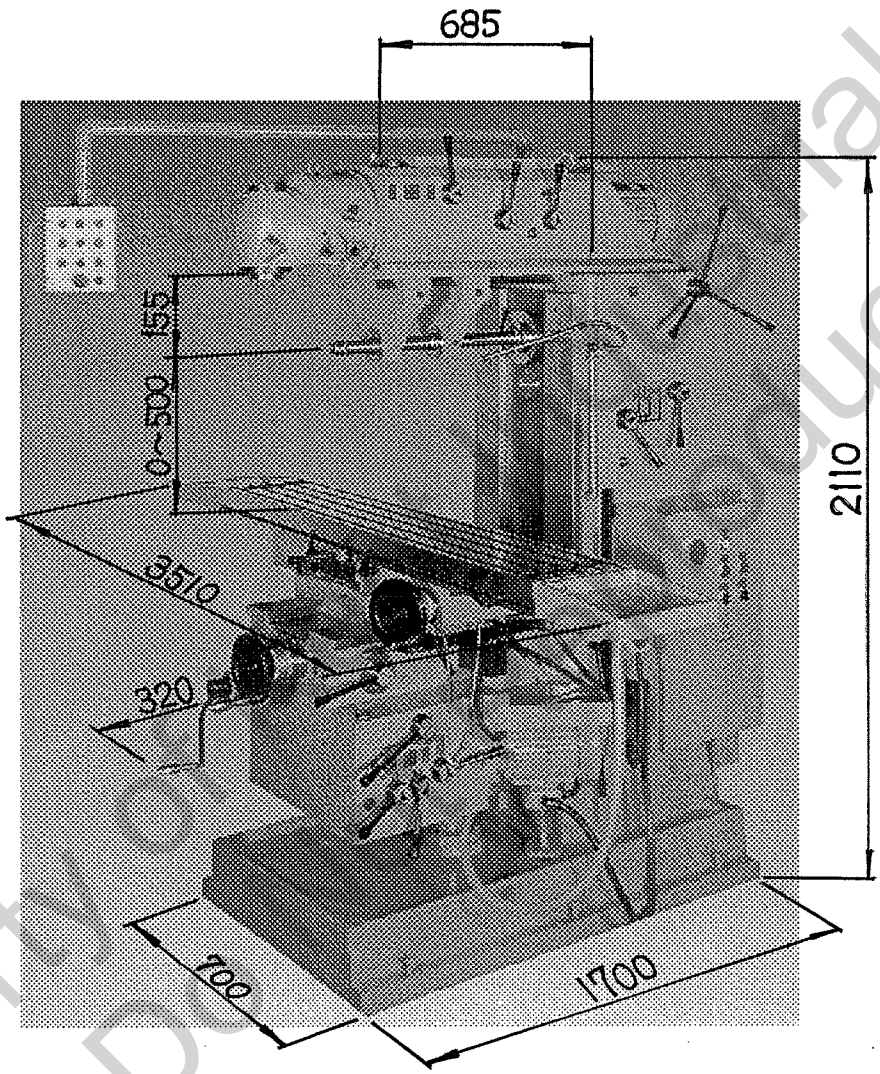

MODEL 2500U (UNIT:MM)

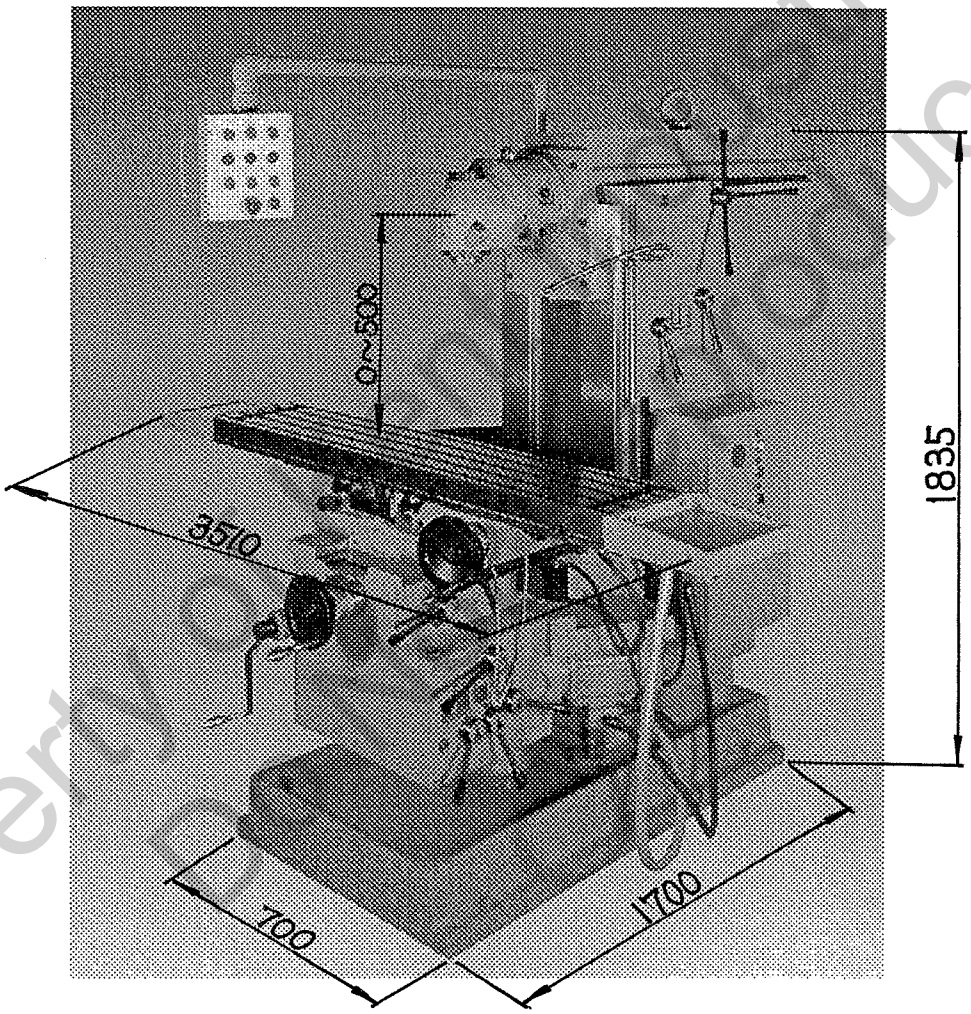

MODEL 2500M (UNIT:MM)

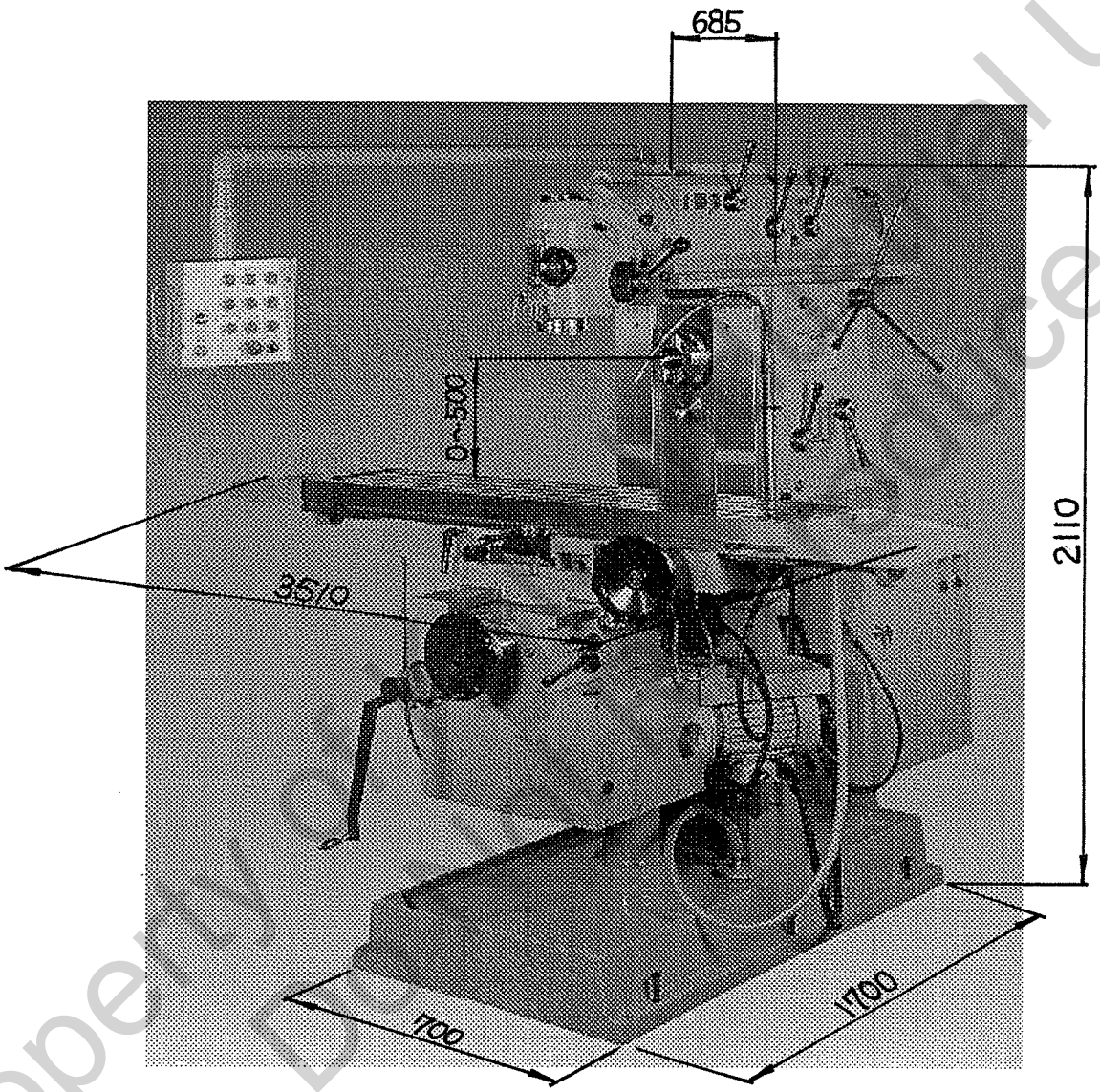

MODEL 2500QM (UNIT:MM)

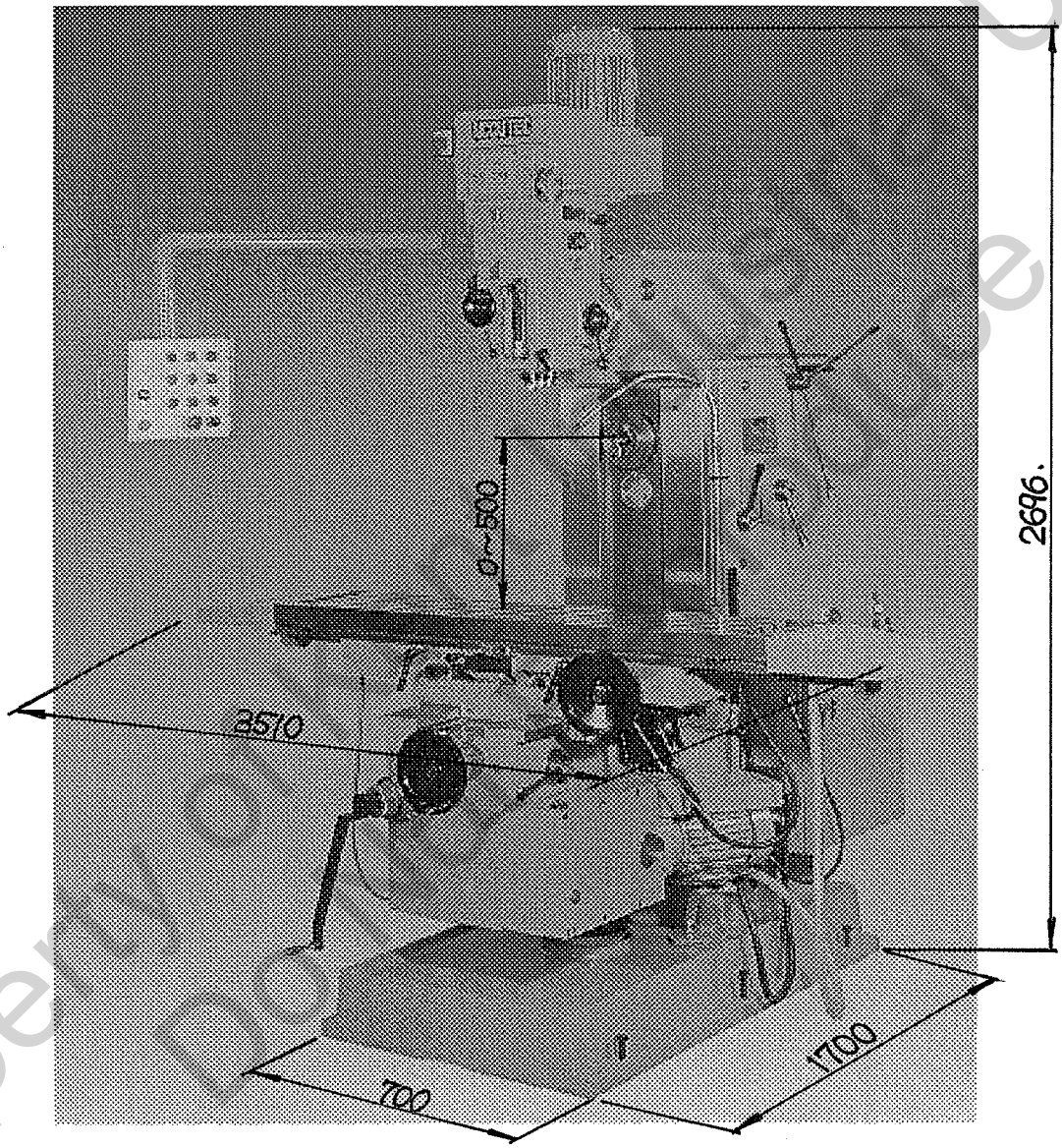

2.3 SPECIFICATION OF THE MACHINE

SPECIFICATION:

TECHNICAL SPECIFICATIONS	MODE. 2500UM/2500M	MODE. 2500U	MODE. 2500QM
TABLE			
Table area	1500X350mm	1500X350mm	1500X350mm
Number of "T" shaped slots	5-16 H7	5-16 H7	5-16 H7
Distance between "T" shaped slots	60mm	60mm	60mm
Rotary movement of table in both direction	45°	45°	45°
TRAVERSES			
Automatic longitudinal	1150mm	1150mm	1150mm
Automatic cross	400mm	400mm	400mm
Automatic vertical	500mm	500mm	500mm
Available distance from spindle to overarm	155mm	155mm	155mm
SPINDLE:(horizontal)			
Housing of the taper spindle	ISO - 40/50	ISO - 40/50	ISO - 40
Diameter of the main shaft nose	88.88-128.57mm	88.88-128.57mm	88.88-128.57mm
Milling arbor diameter(*)	27mm	27mm	27mm
Number of speeds of the spindle (R.P.M.)	12(40-1800)50HZ	12(40-1800)50HZ	12(40-1800)50HZ
FEEDS			
Longitudinal and cross feeds	V.S	V.S	V.S
Vertical feed	V.S	V.S	V.S
RAPID TRAVERSE			
Longitudinal and cross	1300mm/min	1300mm/min	1300mm/min
Vertical	650mm/min	650mm/min	650mm/min
PUISSANCE			
V- Belts	4	4	4
Main motor HP	7.5	7.5	7.5
Feed motor HP	2.5	2.5	2.5
COOLING			
Motor HP	1/8	1/8	1/8
MOTORIZED OVERARM			
Housing of the taper spindle	ISO -40/50	-	ISO -40
number of speeds	12	-	-
Feed range (R.P.M.)	(35-1600) 50HZ	-	Variable speed (70-3600)
Power HP	5.5	-	5

number of speeds	12	-	-
Feed range (R.P.M.)	(35-1600) 50HZ	-	Variable speed (70-3600)
Power HP	5.5	-	5
WEIGHT			
Maximum weight on table	700kg	700kg	700kg
Net weight	3500kg	3100kg	3500kg
Gross weight with seapacking case	3800kg	3400kg	3800kg
Cubical measure of packing	2.3X1.6X2.2M	2.3X1.6X2.2M	2.3X1.6X2.2M

2.4 STANDARD AND OPTIONAL ACCESSORIES

2.4.1 STANDARD ACCESSORIES:

1. 27mm or 1" long horizontal ISO#40 milling arbor.
2. Horizontal & vertical manual draw-bars.
3. Coolant pump & coolant system.
4. Tool box and services tools.

2.4.2 OPTIONAL ACCESSORIES:

1. AC auto feed device is available.
2. Ball screws for "X","Y" axis.
3. Auto ways lubrication unit.
4. Chip tray.
5. Universal dividing head, complete with 3 JAW chuck.
6. Horizontal & vertical rotary table.
7. Hydraulic clamping vise 6" or 8".
8. Power milling vise 6" or 8".
9. Clamping kit.
10. Pneumatic power draw bar.
11. ISO #50 spindle taper.

2.5 OPERATION POSITION AND NOISE LEVEL

2.5.1 OPERATION POSITION

The operation position of the machine is shown as the following drawing:

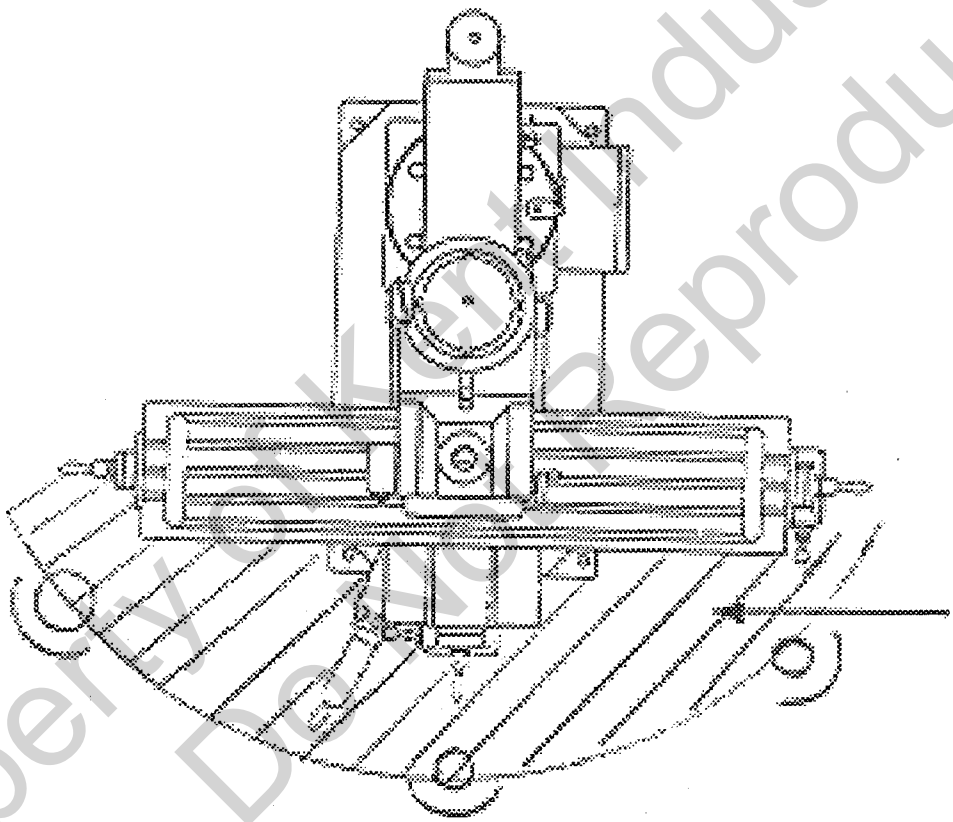

2.5.2 Noise Level

Test Position:

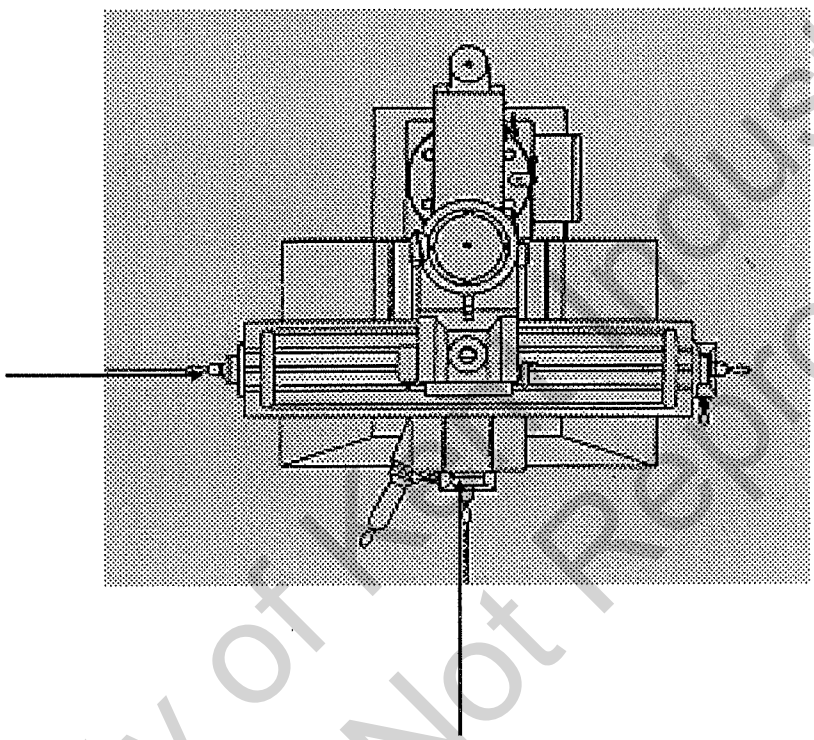

noise level : less than 85 dBA
The distance is 1 meter from the surface of the machinery and at a height of 1.6 meter from floor.

2.6 SAFETY DEVICE

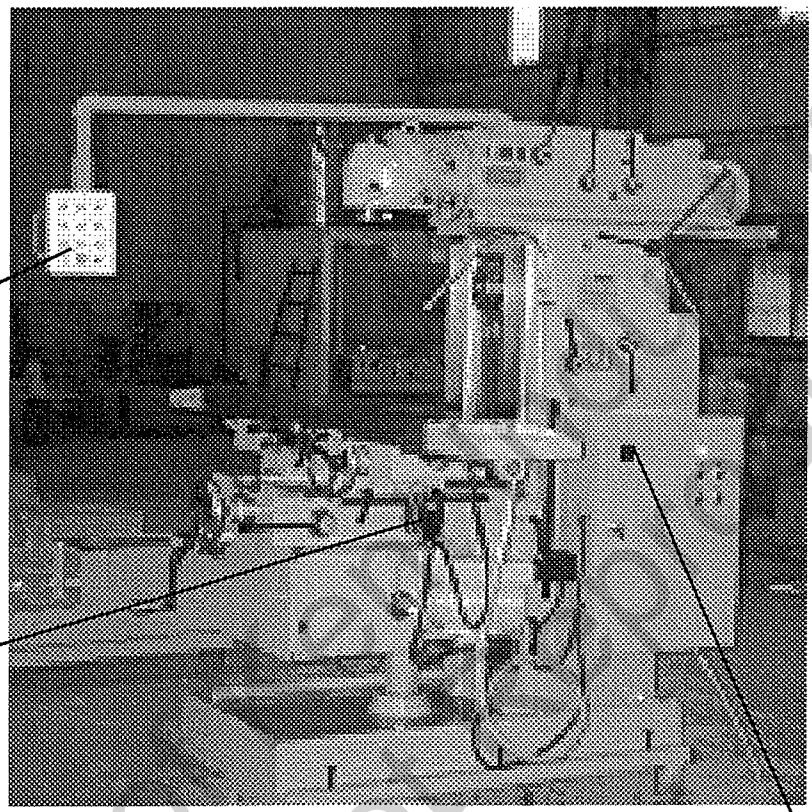

1.Emergency stop push-button
2.Main switch
3.Limit switch

2.7 COVER AND GUARD

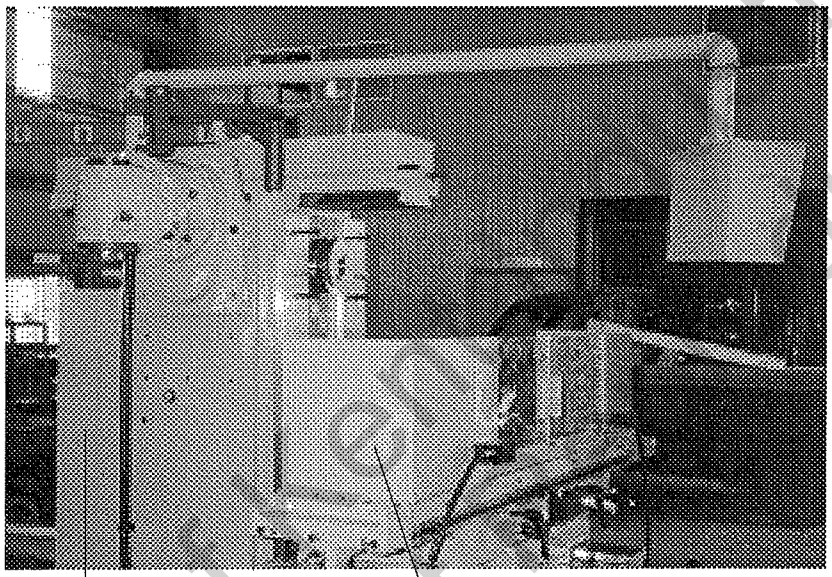

2 1

1. guard
2. cover

2.8 WARNING SIGN AND MARKING

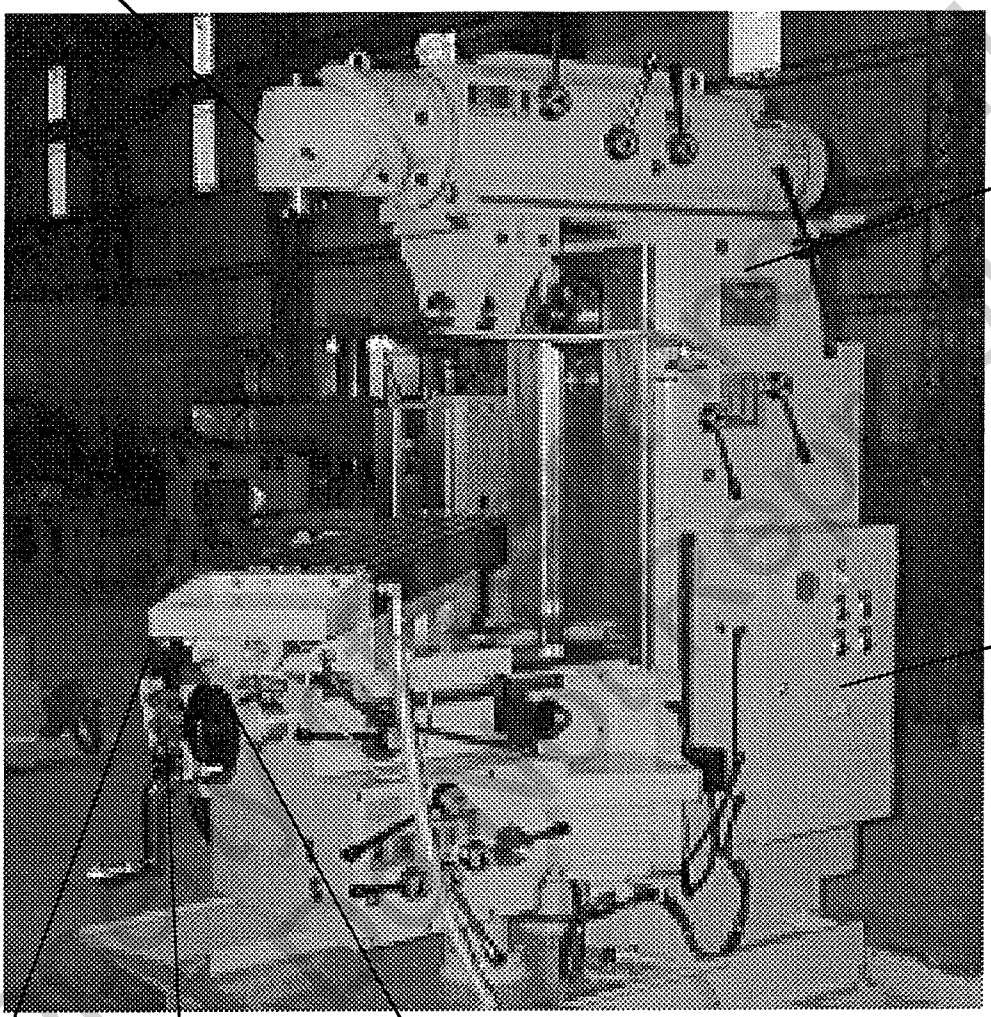

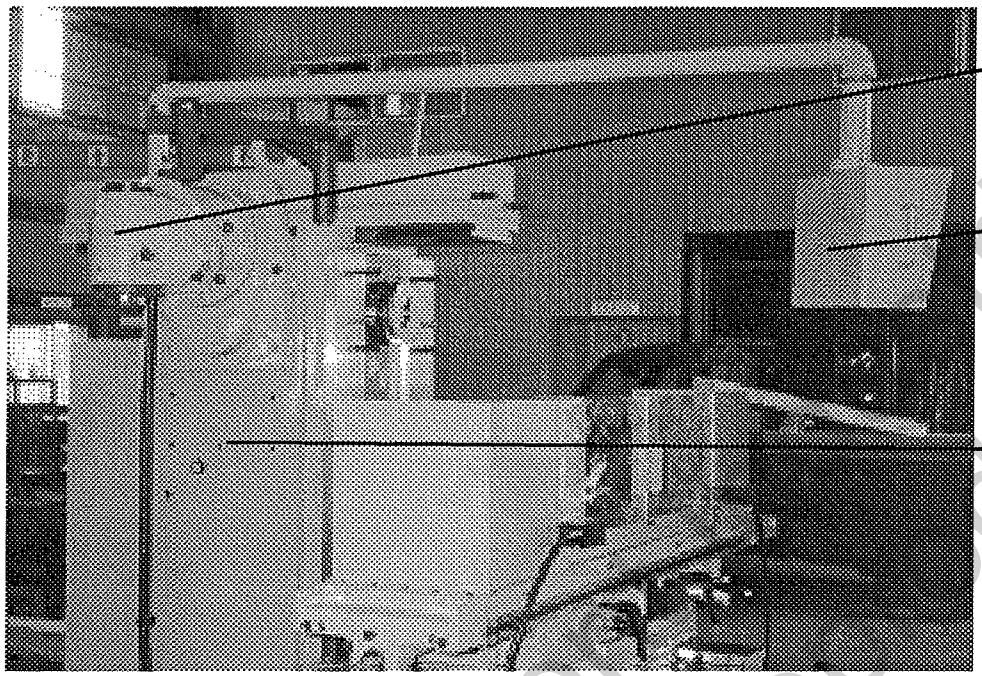

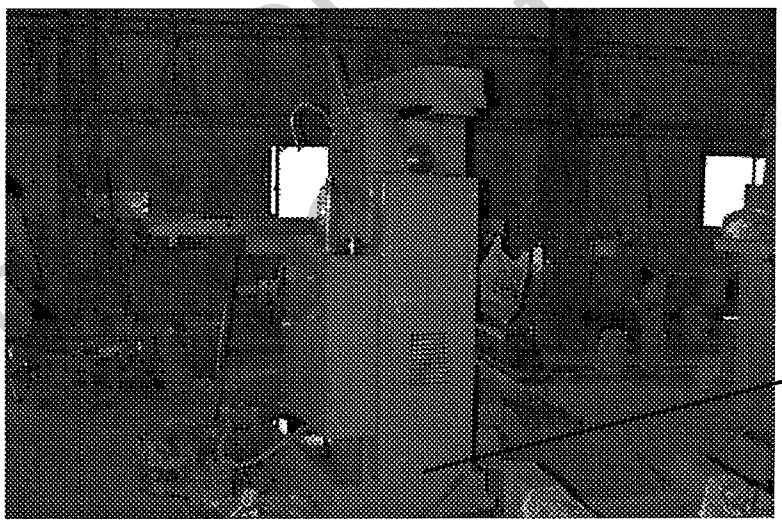

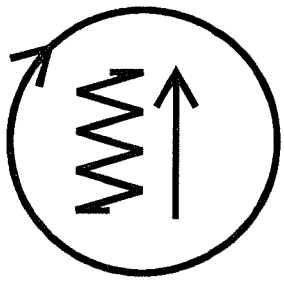

G

VERTICAL FEED

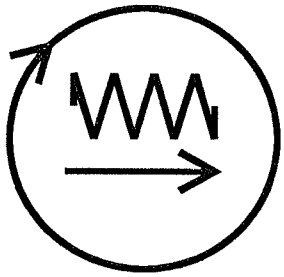

H

HORIZONTAL FEED

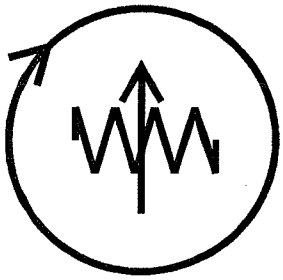

I

LONGITUDAL FEED

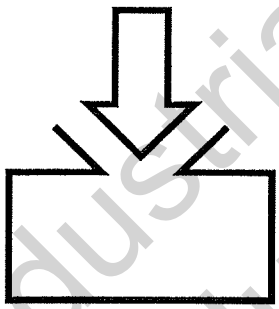

B

FILLING

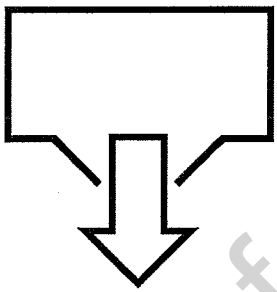

E

DRAINING

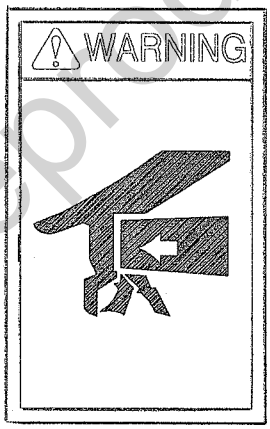

D

WARNING SIGN

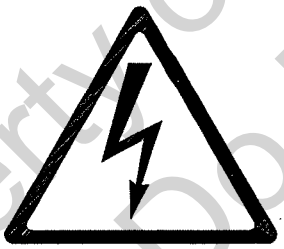

C

WARNING SIGN

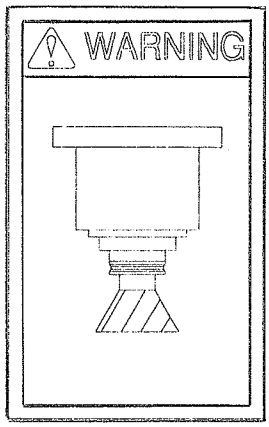

A

WARNING SIGN

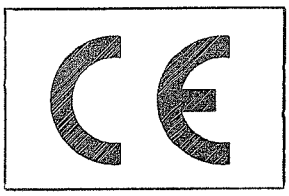

F

CE MARKING

CHAPTER 3

INSTALLING AND ADJUST THE MACHINE

3.1 PREPARATION FOR INSTALLATION

3.1.1 SPACE REQUIREMENT

For best results from any Mills, it is important that the zone selected for installation should be well lighted, as dry as possible, and free from vibration. For safety requirement, you should take the walkway into consideration. The ideal space for the machine would be added 1000 mm to the machine space in width and length.

3.2 Foundation requirement

A special foundation is not essential for this machine. However, it is advisable to place it on a substantial foundation of concrete if possible. If placed on a wooden floor, care should be taken to see that it is adequately supported and free from vibration. If the machine is to be placed on an upper floor, locate it directly over a supporting beam or g der to reduce any vibration generated by nearby machines.

For precision machining, firmly、steadily、well constructed ground and good level foundation are essential to the machine. the heat from sunshine and the external vibration may affect precision machining,so the foundation requirements for the machine should be as follows:

(1) Avoid the sunlight shining directly to the machine.

(2) Avoid locating the milling machine near other machines such as press...etc.

(3) Good ventilation.

Note:

The machine may be leveled and used for free standing. please refer to leveling device. however in order to obtain the best performance, it is recommended to install the machine with foundation bolt based on the foundation drawing .

FOUNDATION DRAWING

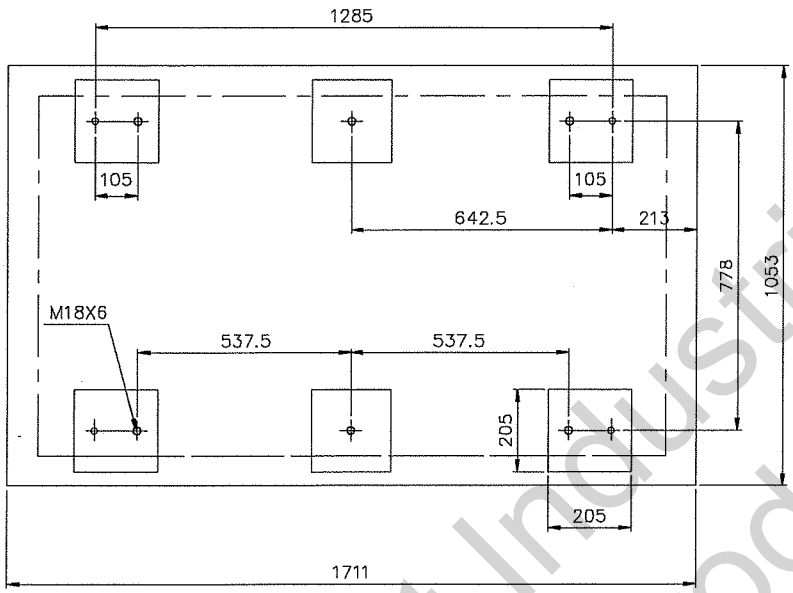

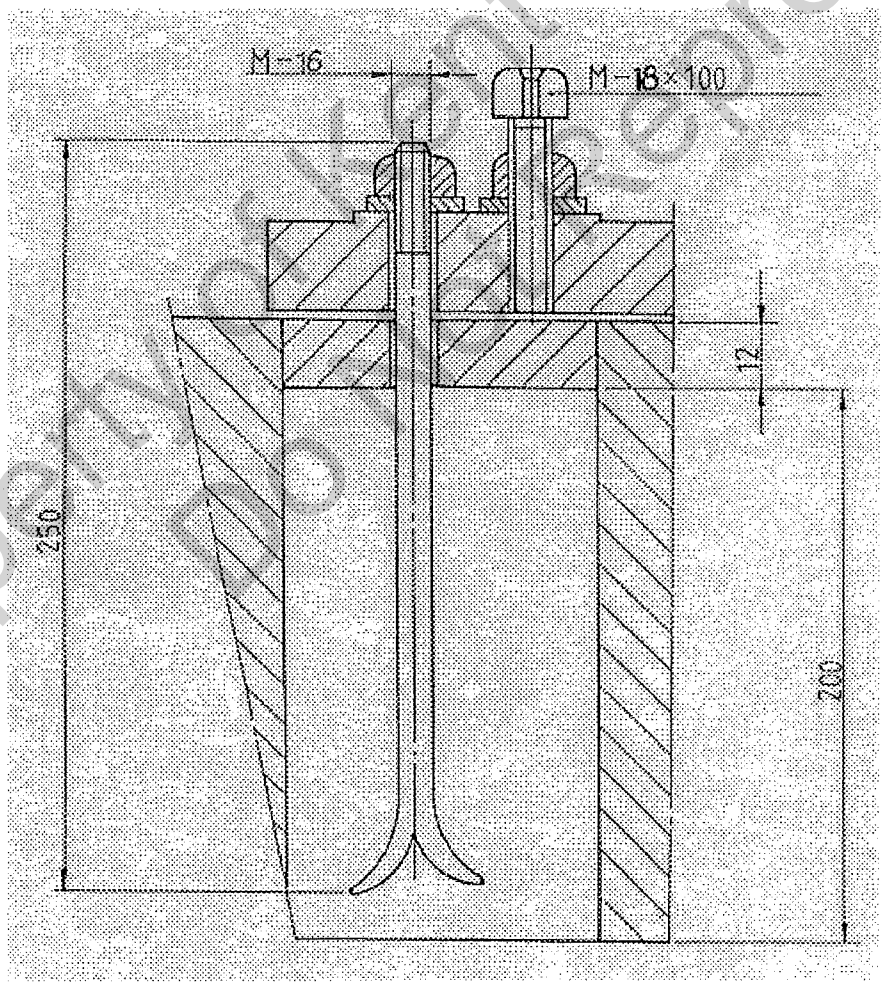

3.3 POWER REQUIREMENTS

voltage	steady state voltage. 0.9 ... 1.1 of normal voltage.
frequency	0.99 ..... 1.01 of normal frequency continuously, 0.98 ..... 1.02 short-time.
harmonics	harmonic distortion not to exceed 10% of the total r.m.s voltage between the live conductors for the sum of the 2nd through 5th harmonic.
voltage unbalance in 3-phase supplies	neither the voltage of the negative sequence component nor the voltage of the zero sequence component shall exceed 2% of the positive sequence component
voltage impulses	not to exceed 1.5 ms in duration with a rise / fall time between 500 ns and 500 us and a peak value not more than 200% of the rated r.m.s. supply voltage.
voltage interruption	supply interrupted or at zero voltage for not more than 3 ms at any random time in the supply cycle there shall be more than 1 s between successive interruptions
voltage dips	voltage dips shall not exceed 20 % of the peak voltage of the supply for more than one cycle. there shall be more than 1 s between successive dips.

3.4 ENVIRONMENT REQUIREMENT

(A) Temperature:normal temperature is within +10 ° C to 38 ° C.
(b) Humidity: 30% to 95% .
(c) Keep away from gas、chemicals、ashes、acid、salt 、electrical magnetic interference or explosive environment.
(d) Environment brightness: more than 300 lux.

3.5 TRANSPORTATION

3.5.1 MACHINE WEIGHT

TECHNICAL SPECIFICATIONS	MODE. 2500UM/2500M	MODE. 2500U	MODE. 2500QM
WEIGHT			
Maximum weight on table	700kg	700kg	700kg
Net weight	3500kg	3100kg	3500kg
Gross weight with seapacking	3800kg	3400kg	3800kg
Cubical measure of packing	2.3X1.6X2.2M	2.3X1.6X2.2M	2.3X1.6X2.2M

WARNING:
Be sure that the capacity of lifting equipment is adequate before attempting to lift the machine.

3.5.2 UNCRATING

Upon receipt of shipment, remove crating carefully but don't remove skids until the Mill has been moved to the appoximate place selected for its erection.

3.5.3 PREPARATION AND SAFETY CHECKS

1. All equipments should be examined by one person only.
2. Slings must be examined through the whole length by eyes.
3. Operator must be qualified.
4. Operator should keep away when lifting. Do not allow any person to stand under or near the machine when attempting to lift the machine.
5. Ensure that eyebolts and securing screws of lifting equipments are correctly tightened.
6. Remove or tighten all loosen items.
7. Clamp table securely .

3.5.4 LIFTING PROCEDURE

To obtain a balanced condition before lifting. it is necessary to move the table at center and in front of knee. Be sure to clean a11 ways before moving table or saddle (see preceding paragraph).

▲ : lifting point

2500QM

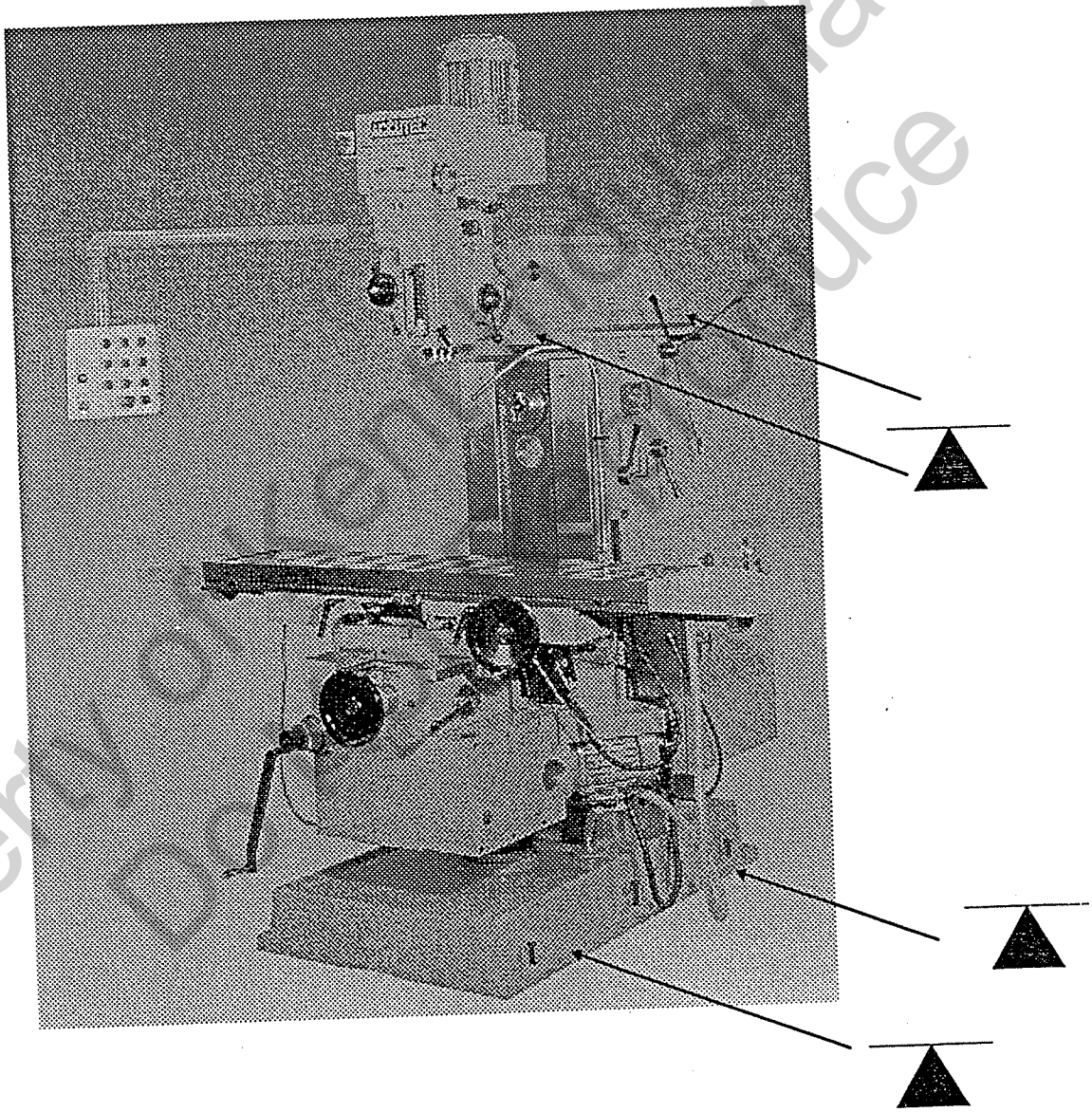

2500UM

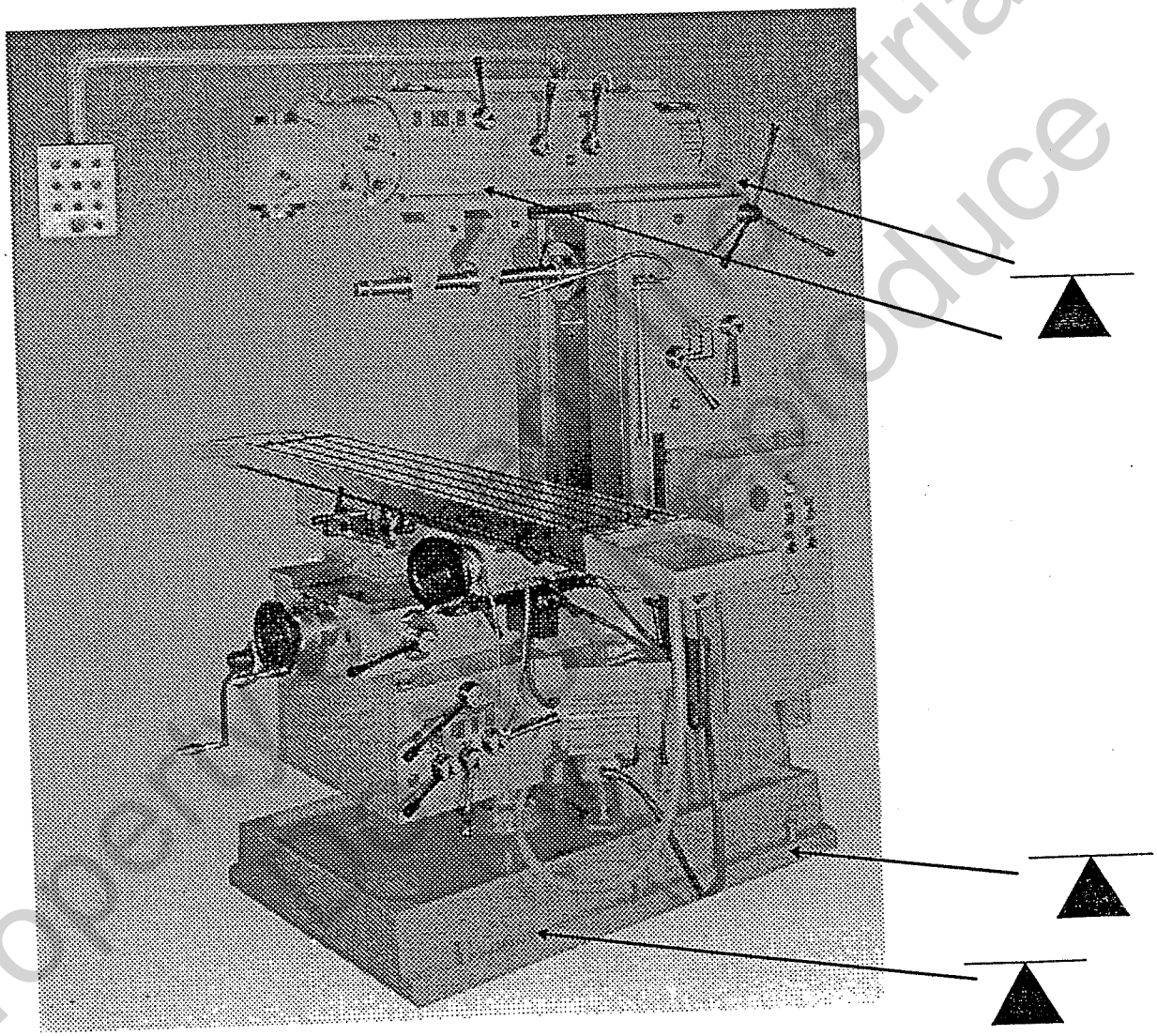

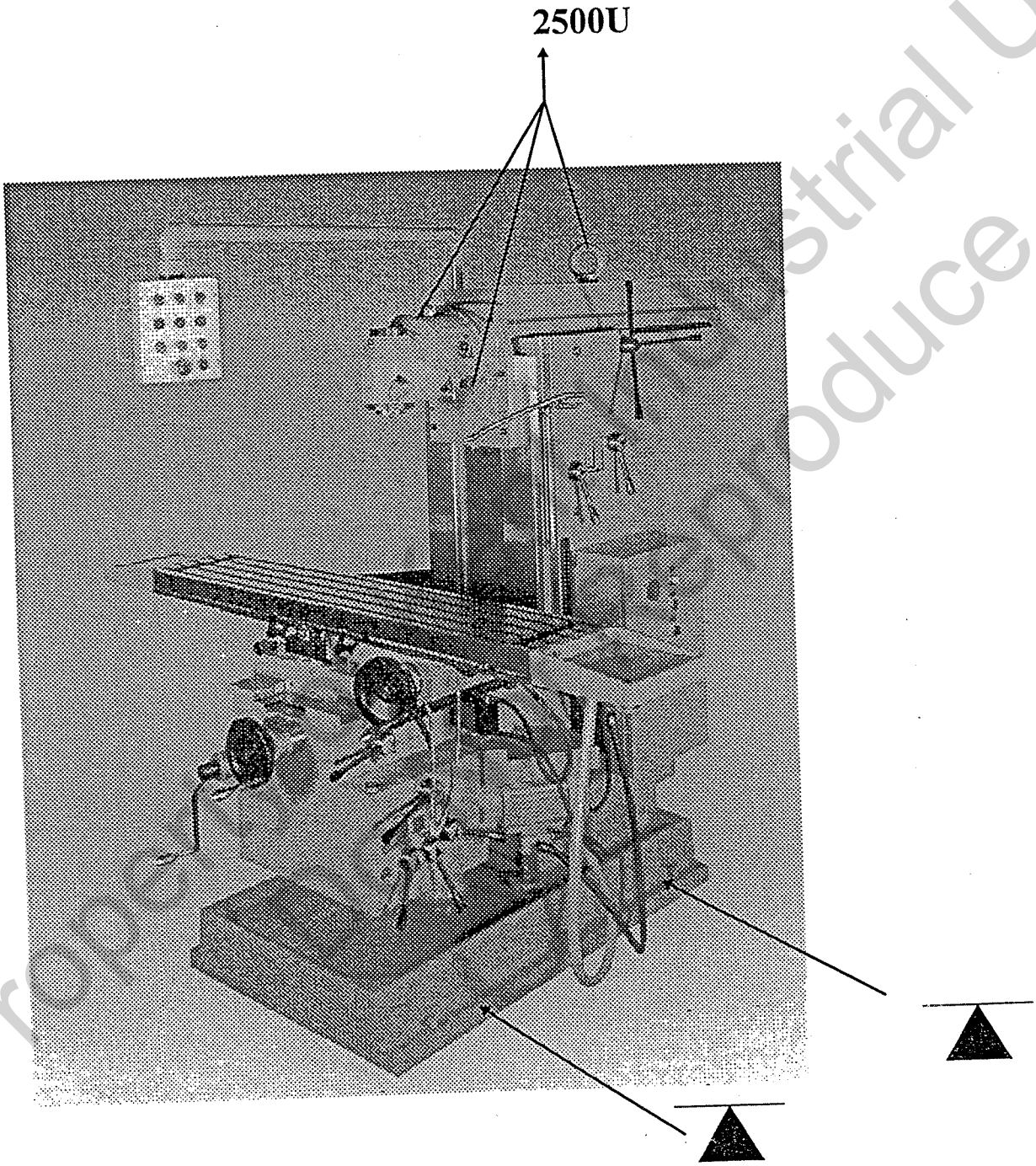

2500M

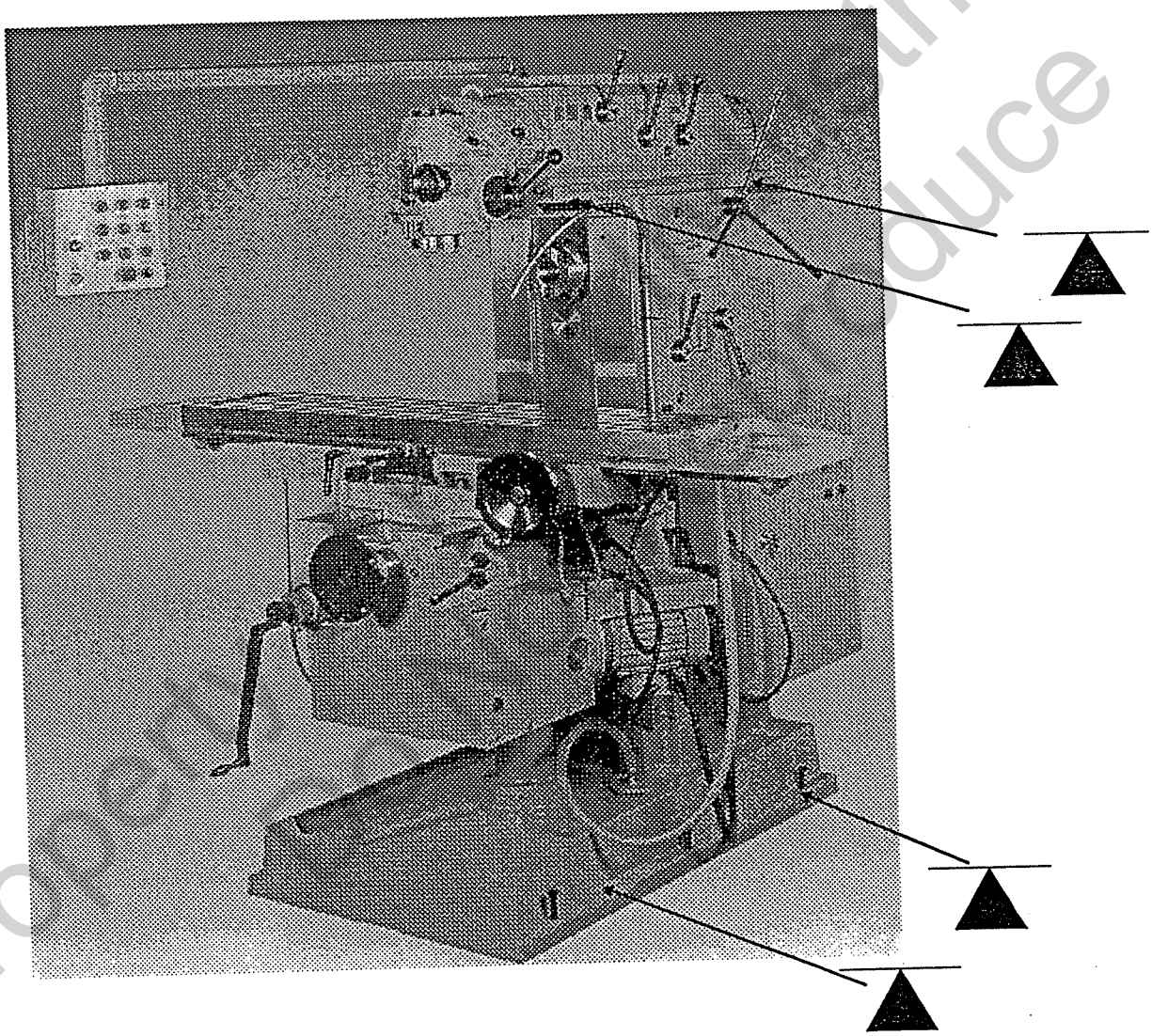

3.6 MACHINE INSTALLATION

3.6.1 CLEANING

All machine's surfaces covered with rust preservative should be thoroughly cleaned off before moving any slideways of the machine. Use good grease solvent and soft rags to remove the rust preservative thoroughly from all exposed parts and surfaces of the machine.

Use a clean brush (not wired) to clean leadscrew and table rack. Brush a light coating machine oil to the machine's surface for anti-rust protection. In order to get a long using life, be sure to make it as a habit to clean and lubricate the machine regularly.

Note: 1. It is necessary to take special care to clean the lead screw、slideways and spindle completely.

2. The rust preservative coating is better to be removed by using "paraffin" with a clean brush. If the coating is softened material, please removed with clean rags. Remove rust preservative before moving slide way.

Do not move the table. Saddle and ram before cleaning. Use a good clean grease solvent to remove slushing compound and dirt accumulated in transit. Use rags rather than waste to eliminate lint. Do not use an air hose as this will force grit and dirt into important functioning units.

3.6.2 ANCHORING TO CONCRETE FLOOR

If the mills is to be bolted to a concrete floor. Anchor bolts (not supplied with the mills) should be used. If the mills is to be fastened down on a wooden floor lag screws may be used. Location for anchor bolts or lag screws refer to the drawing as below. This can be done by setting the machine in its exact location and marking the leveling screw locations directly on the

floor. Then, in the case of a concrete floor, proceed as follows:
Move the machine out of the way and drill the holes for the anchor bolts about 6 inches in diameter and 10 inches deep, or as shown on drawing attached.
Raise the machine with a crane approximately 10 inches from the floor. Place 8 inches square steel plates and screw seats on anchor blots. Fill the holes around the anchor bolts with quick drying cement, thin enough to flow easily. After the cement around the anchor bolts has set, the boards should be removed, the machine lowered to the floor and the holddown nuts threaded onto the anchor bolts. The machine is now ready for leveling.

3.6.3 PROCEDURE FOR LEVELING

It is most important to set machine's level properly in order to perform it accurately. To get the best result, it is suggested to mount the machine on a concrete floor. Please referred to the foundation requirements.
leveling a mills is one of the primary essentials in proper operation. If the machine is not to be fastened to the floor it is only necessary to see that screws seats are properly placed before proceeding with the leveling as described below, it may be desirable to anchor the machine firmly in place by bolting it to the foundation.This can be accomplished by means of the leveling jack.

Use a precision level that is graduated to at least 0.001 inch per foot. A carpenters level or the level in a machinist's combination square is not accurate enough. The leveling process is accomplished in two phases, the first being the preliminary leveling and the second the final leveling. The preliminary leveling is to remove any pronounced twist in the base and should be done with the units remaining in one position.

3.6.4 POWER CONNECTION

The connection of power supply should be done by qualified electricians. The machine is ready for 3 phase or single phase, 50 or 60 cycles, AC voltage. Connection procedures are as follows：

1. Check the required voltage with the power supply to ensure that they are compatible.

2. Connect the machine's wiring to power supply and make sure that the connection is in compliance with the local safety regulations.

3. Check the rotation of the motor which should be turned clockwisely. If the motor turns in the wrong direction, interchange the terminals for phase correction.

Warning:

1. Before connecting to the power source, check motor voltage、phase and cycles .

2. Make sure that the power supply is properly fused and the earth circuit is adequate.

3.6.5 DISMANTLING PROCEDURE OF THE MACHINE

The dismantling procedure is the reverse procedure of the installation.

CHAPTER 4

OPERATION

4.1 BEFORE OPERATION

4.1.1 MACHINE OPERATION.

1. Once again, check all boxes and bearing surface are well--lubricated.
2. Before connect main power lines, make sure that all switches are OFF, push emergency stop switch.
3. Be sure that the machine is earthed.
4. After connect main power lines, check spindle direction as per instruction on control panel.

4.1.2 STARTING

Before starting the machine, make sure that if the machine is properly lubricated. Then, push down the power on button after ensuring that the spindle revolution selection switch on the electric cabinet panel is at the neutral position,then turn the spindle revolution selection switch to the desired revolution.

4.1.3 STOPPING

If you want to stop the machine during operation, first stop any feed then turn the spindle revolution selection switch to the the neutral position. Finally push down the power off button to cut off the power and press down the spindle brake to stop the rotation of the spindle.

Note :

(a) make sure that you know how to stop the machine before starting it.

(b) stop the machine immediately if any accident happened.

(c) do not touch the cutters、spindle or workplace during operation.

(d) wear suitable personal protective equipment during operation.

(e) make sure that the speed 、feed and cutting depth is suitable for the operation.

4.2 CONTROL PANEL

4.2.1 MAIN PANEL

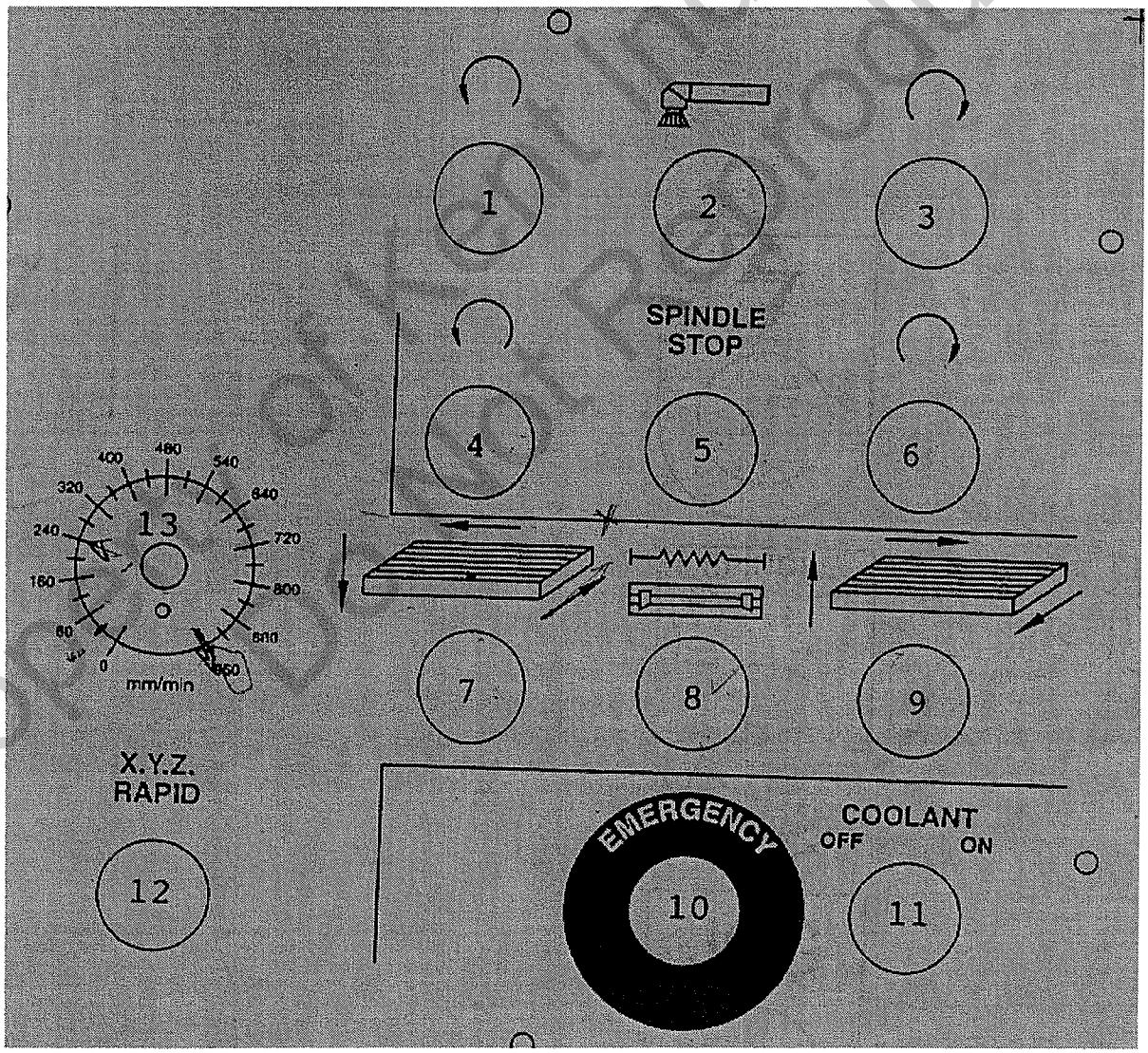

FIGURE	FUNCTION
1.	overarm spindle on (reverse)
2.	overarm spindle stop
3.	overarm spindle on (forward)
4.	horizontal spindle on (reverse)
5.	horizontal spindle stop
6.	horizontal spindle on (forward)
7.	table moves left / table moves toward column /table moves down
8.	table moves left or move right or stop table moves toward column or moves away from column or stop table moves down or moves upward or stop
9	table moves right / table moves away from column / table move upwards
10	emergency stop
11	coolant off-on
12	the rapid feed of the table for the axis, X orY or Z. of the table
13	the spinning button controlling the variable speed for the axis, x or y or z, of the table.

REMARK : overarm motor on-off-on (figure 1,2,3) will be available only with model 2500M & 2500UM.

4.2.2 ELECTRIC CABINET PANEL

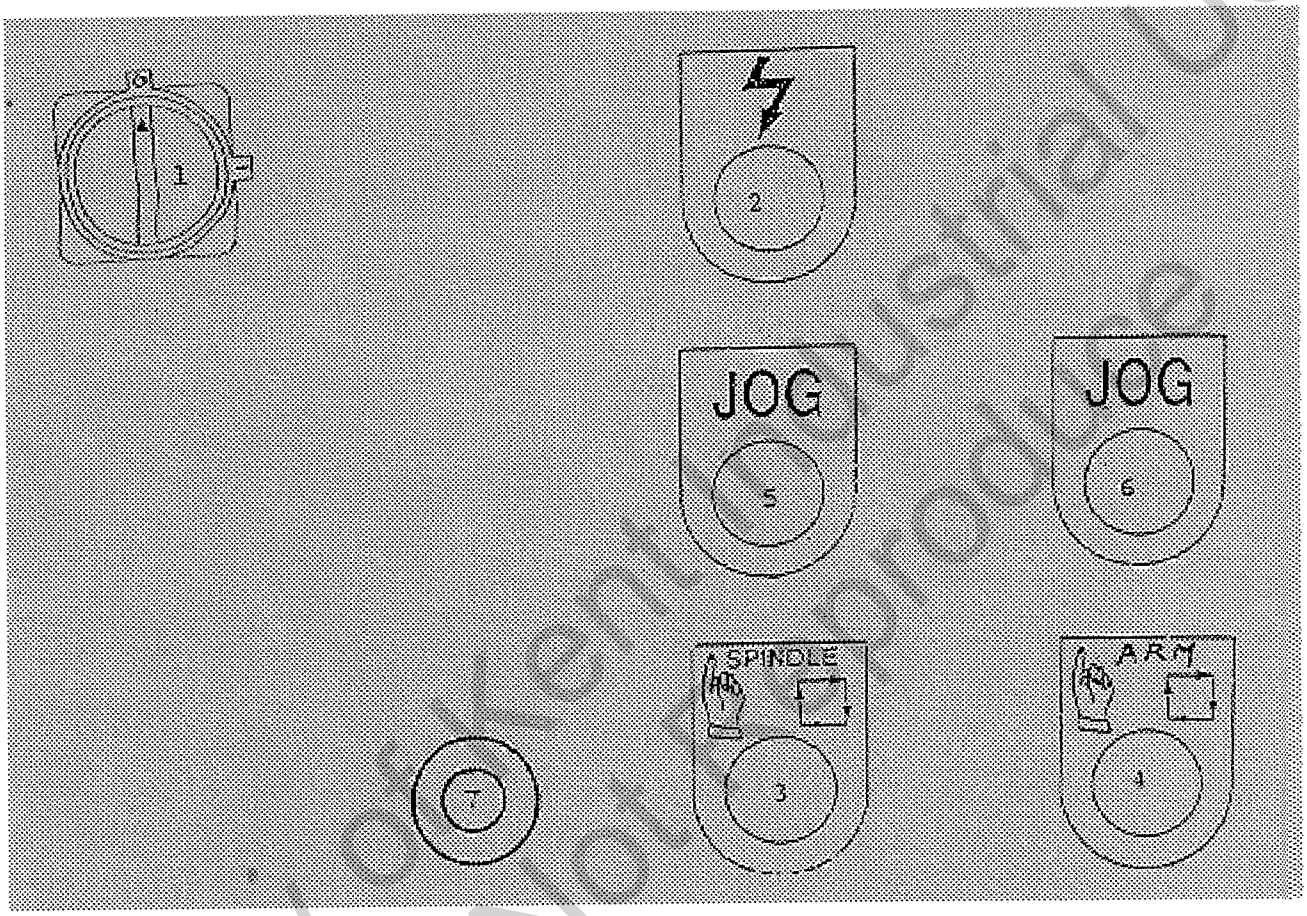

FIGURE	FUNCTION
1.	main switch
2.	pilot
3.	horizontal spindle switch
4.	overarm spindle switch
5.	jog for horizontal spindle
6.	jog for overarm spindle
7.	stop

REMARK :

1. While changing the speed for horizontal or vertical application. It's necessary to confirm whether the change gear lever of the overarm spindle or the change gear lever of the horizontal spindle whose position is correct or not, which please use the jog button for overarm spindle or jog button for horizontal spindle for the confirmation.

2. The jog buttons can be also available for the temporary running of the overarm spindle or horizonal spindle.

3. Overarm spindle switch and jog buttons only for model of 2500UM & 2500M.

4.3 DESCRIPTION OF THE MAIN PARTS

MAIN PARTS

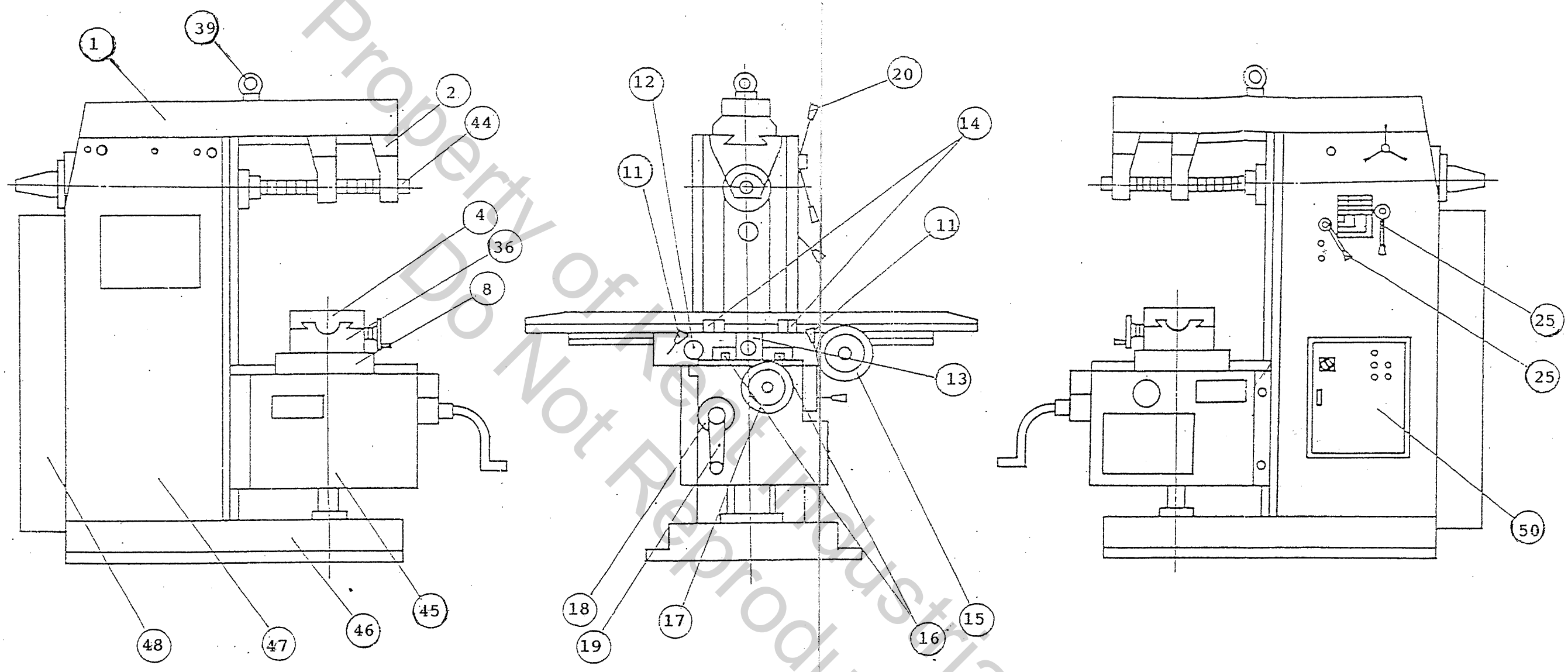

NO.44 ; HORIZONTAL LONG ARBOR
NO.45 : KNEE
NO.46 : BASE
NO.47 : COLUMN
NO.48 : REAR COVER
NO.49 : CONTROL BOX
NO.50 : ELECTRIC CABINET

FIG. 10A

MAIN PARTS

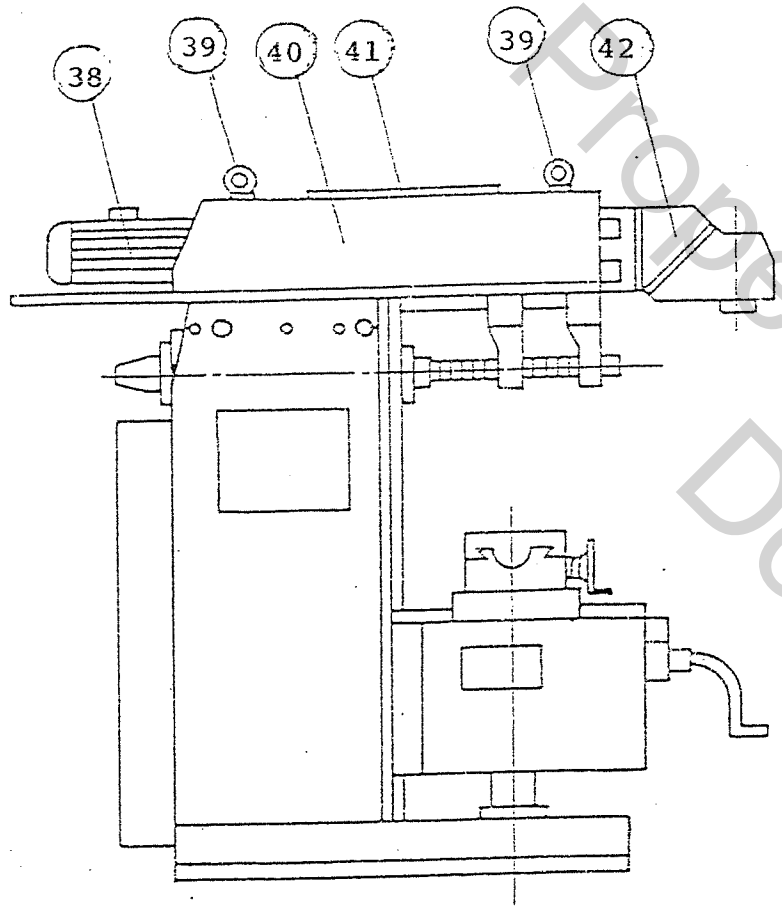

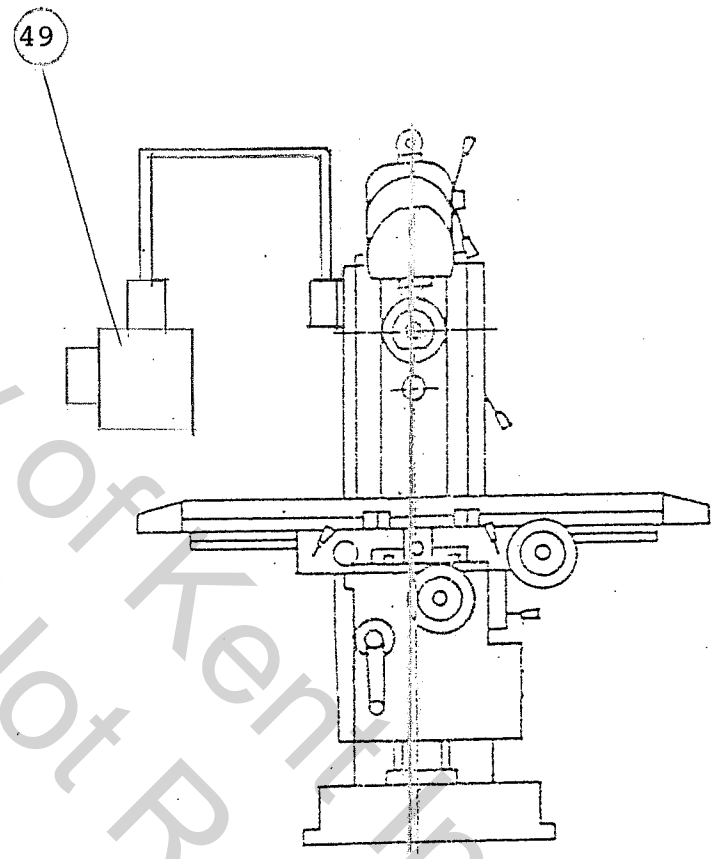

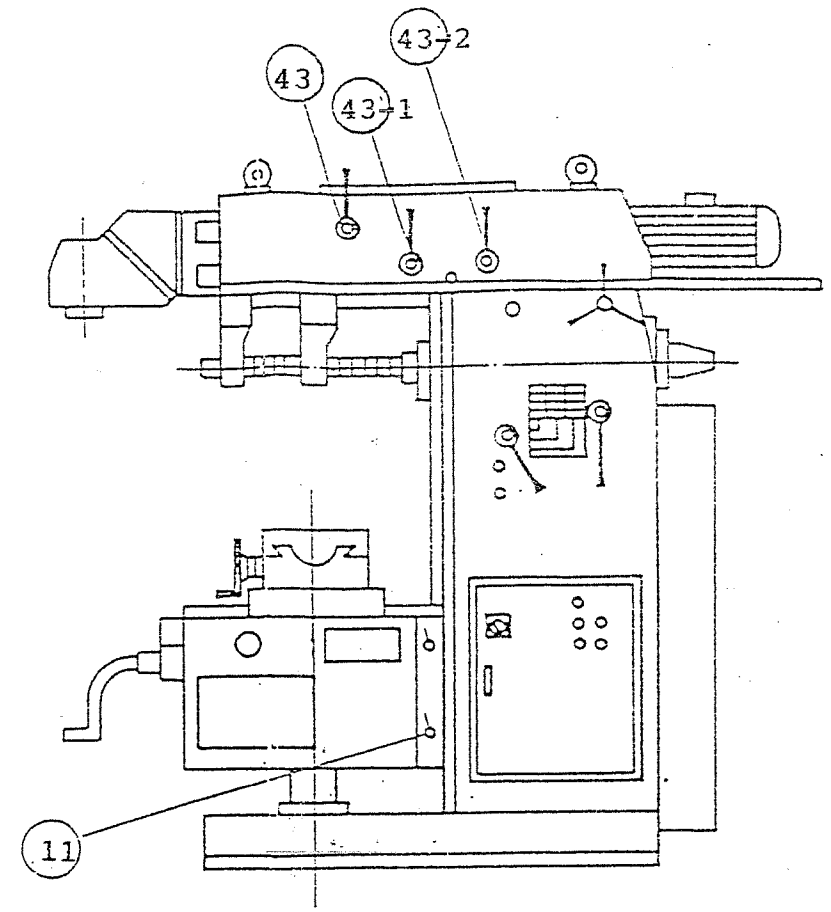

NO.38 ; RAM MOTOR
NO.39 : HOOK
NO.40 : RAM (UM & M)
NO.41 ; COVER
NO.42 : MULTIANGLE HEAD
NO.43 : SPEED SECLECTOR
(CHANGE GEAR LEVER FOR RAM SPINDLE)
NO.43-1 : SPEED SELECTOR FOR RAM SPINDLE
NO.43-2 : SPEED SELECTOR FOR RAM SPINDLE

FIG. 9A

FIG. 8A

MAIN PARTS

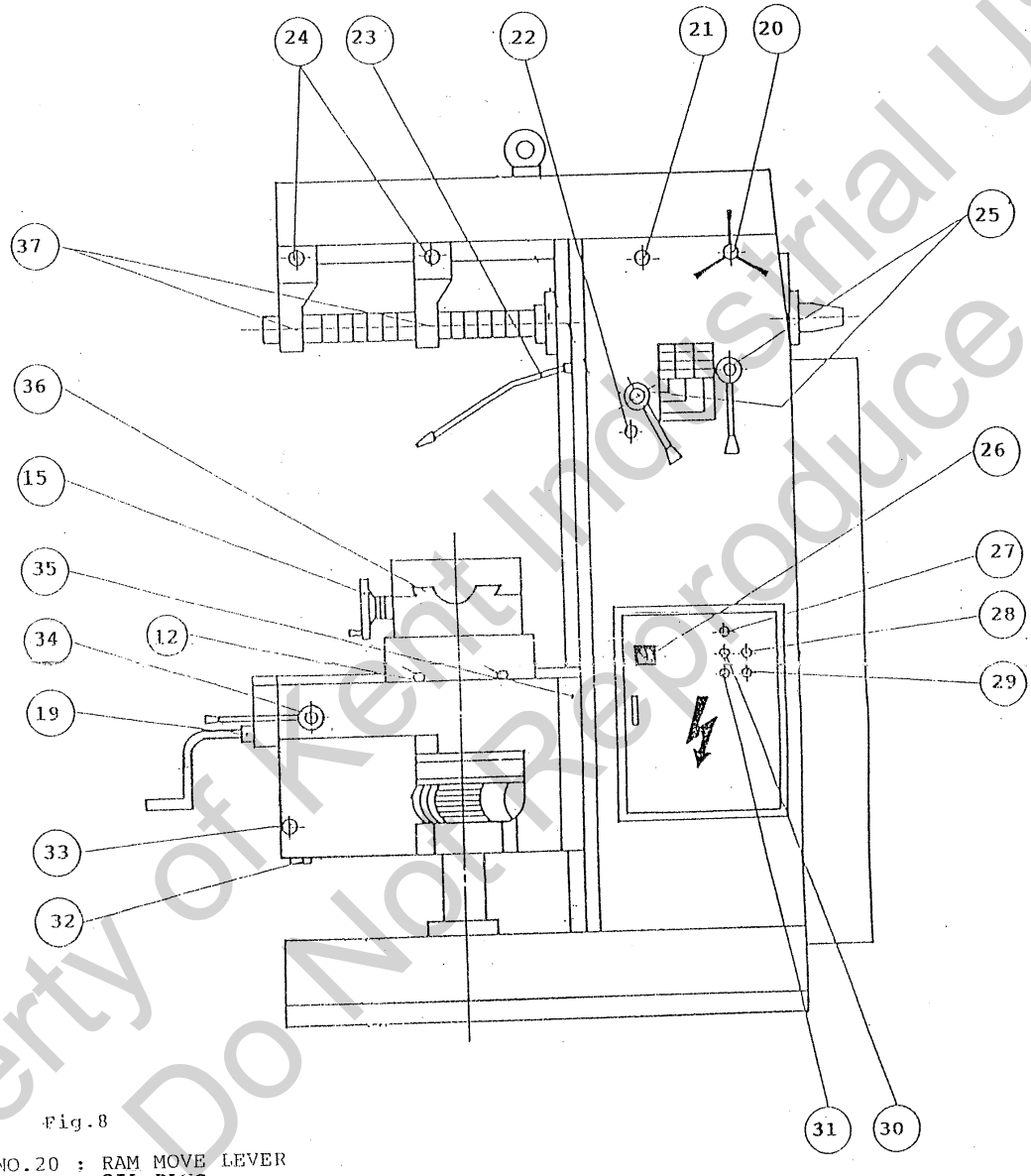

Fig.8

NO.20 : RAM MOVE LEVER
NO.21 : OIL PLUG
NO.22 : OIL WINDOW
NO.23 ; COOLANT NOZZLE
NO.24 : BRACKET CLAMPER
NO.25 : SPEED SELECTOR
(CHANGE GEAR LEVER FOR HORIZONTAL SPINDLE)
NO.26 ; MAIN SWITCH
NO.27 : PILOT
NO.28 : JOG FOR RAM SPINDLE (ONLY FOR MODEL OF 2500M & 2500UM)
NO.29 : RAM SPINDLE SWITCH (ONLY FOR MODEL OF 2500M & 2500UM)
NO.30 : JOG FOR HORIZONTAL SPINDLE
NO.31 : HORIZONTAL SPINDLE SWITCH
NO.32 : OIL OUTLET PLUG
NO.33 : OIL WINDOW
NO.34 : TABLE FEEDING ENGAGE LEVER)
(CHANGE GEAR LEVER FOR TABLE FEEDING TOWARD
THE DIRECTION OF Y AXIS OR Z AXIS)
NO.35 : CLAMPING PLATE
NO.36 : SADDLE
NO.37 : HORIZONTAL SUPPORT BRACKET

MAIN PARTS

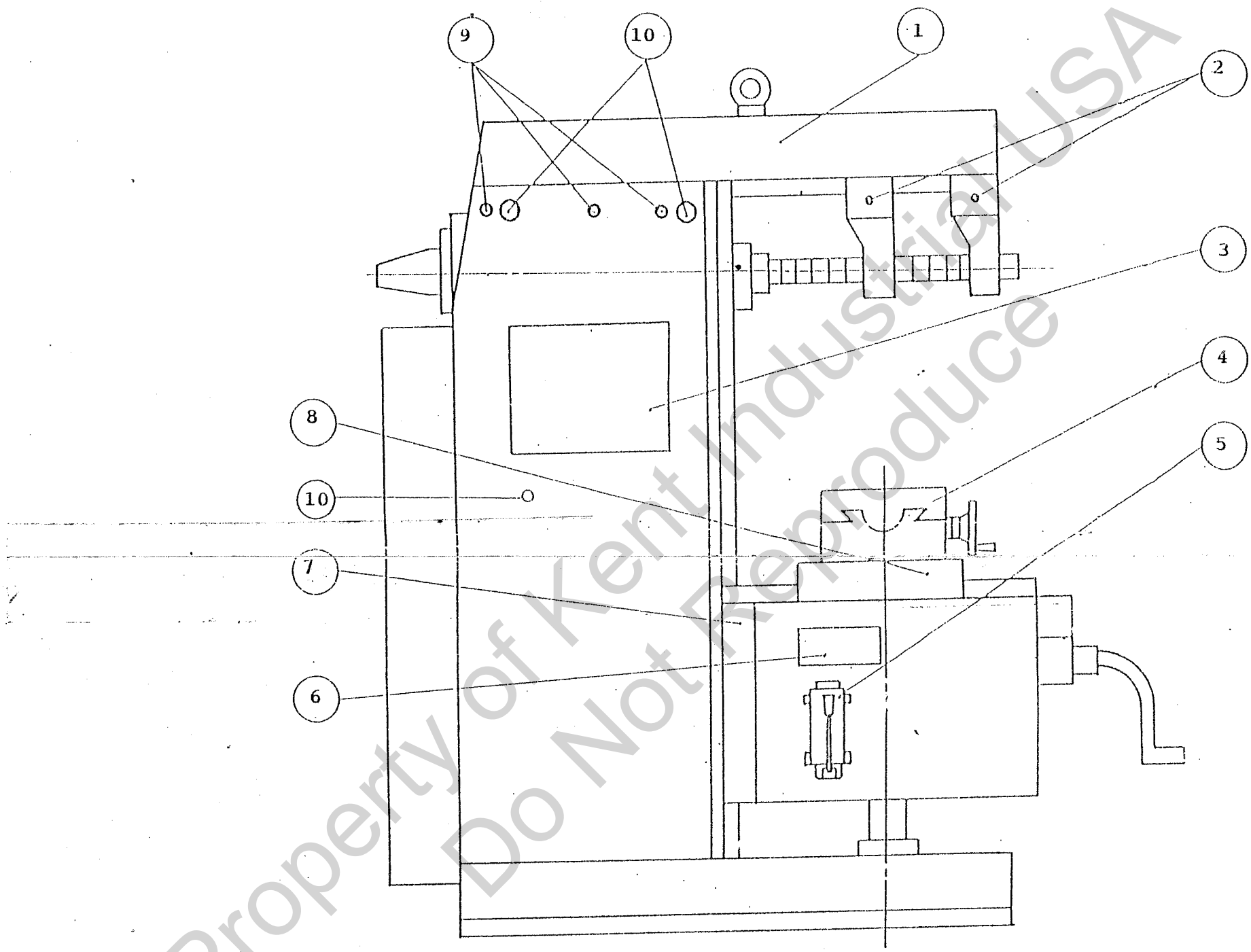

NO.1: RAM
NO.2: HORIZONTAL SUPPORT BRACKET
NO.3: COVER
NO.4: TABLE
NO.5: HAND LUBE. PUMP
NO.6: THE SIDE COVER OF THE KNEE
NO.7: CLAMPING PLATE
NO.8: SADDLE BASE
NO.9: ADJUSTING BOLTS
NO.10: OIL WINDOW

FIG. 6A

MAIN PARTS

NO.11 : CLAMPING LEVER
NO.12 : BACKLASH ADJUSTING KNOB
NO.13 : MOVE LEVER (CHANGE GEAR LEVER FOR TABLE FEEDING TOWARD THE DIRECTION OF X AXIS)
NO.14 : STOPPER
NO.15 : LONGITUDIANL WHEEL
NO.16 : SWIVEL TABLE CLAMPER
NO.17 : CROSS WHEEL
NO.18 : DIAL
NO.19 : ELEVATING LEVER

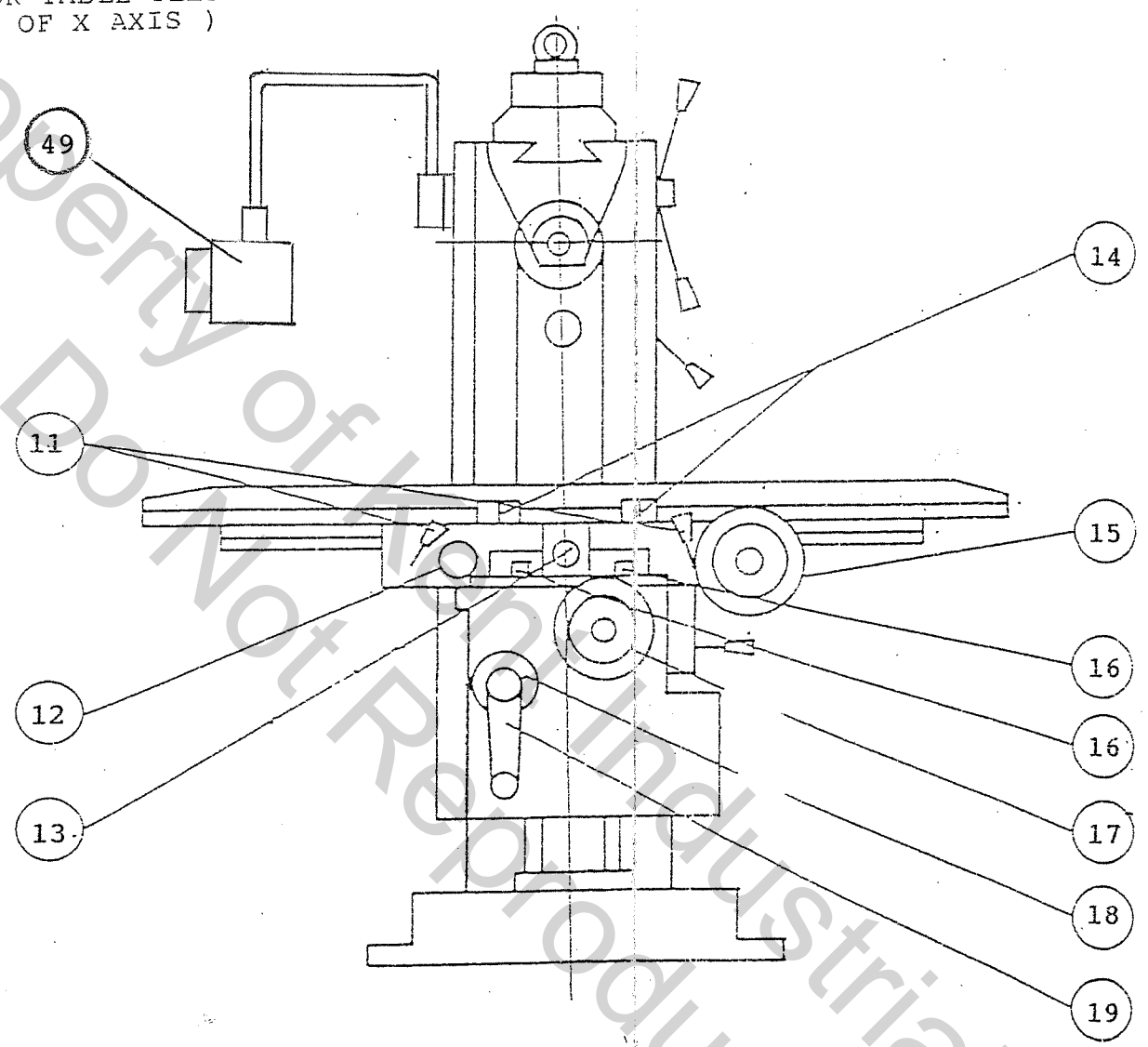

FIG. 7A

MODEL: 2500 M

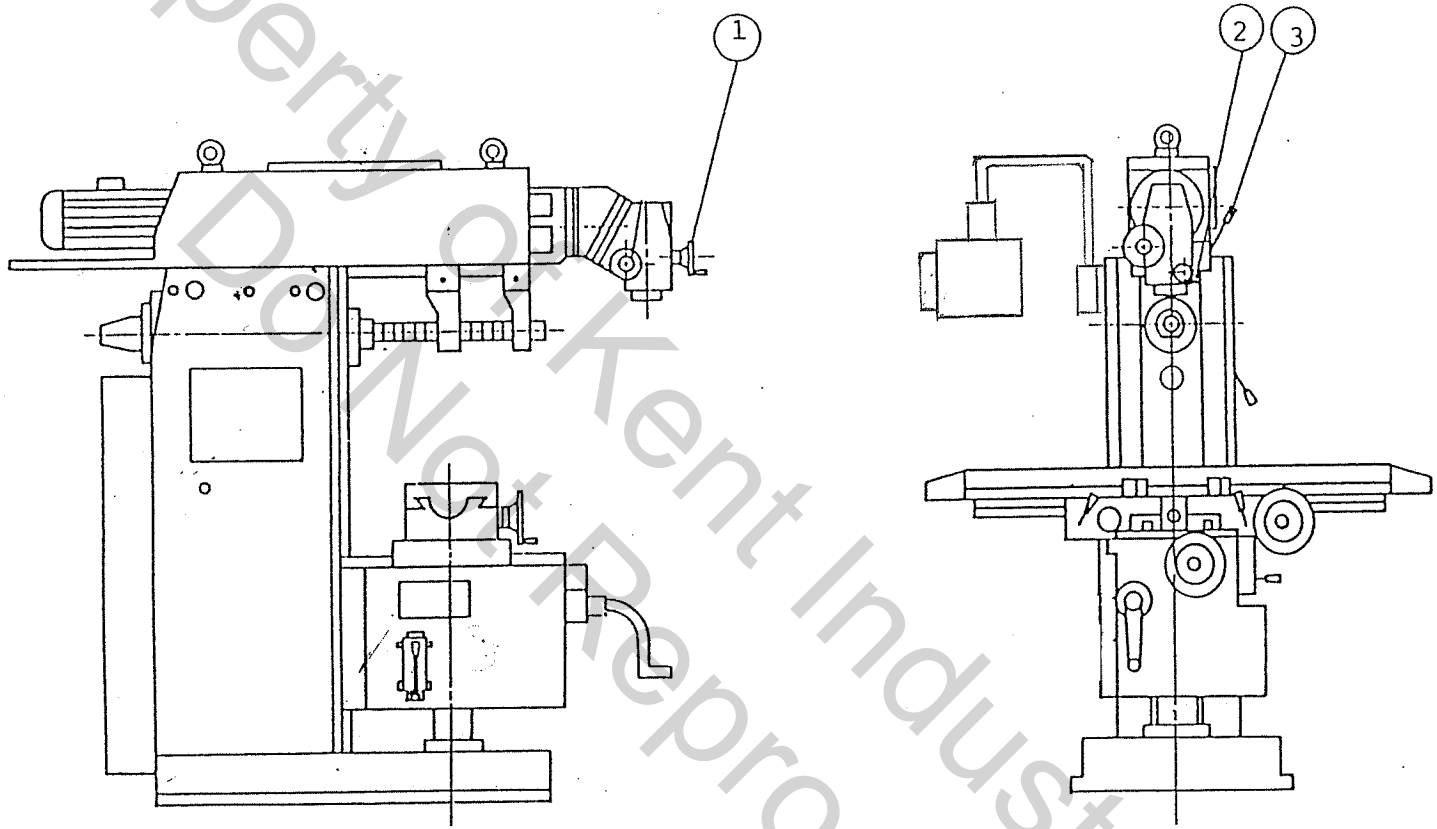

NO.: 01 MICO FEED WHEEL
NO.: 02 CLAMPER
NO.: 03 MANUAL FEED LEVER

4.4 SPINDLE SPEED CHANGE

Spindle speeds are adjusted by turning speed change gear lever on the side of the belt housing. The speed dial must be set in correct position, where the gears in gear box will mesh correctly. If not, wear gloves to turn the spindle a little bit to make it work.

4.4.1 HORIZONTAL SPINDLE OPERATIONS AND SPEED CHANGE.(see fig.8A)

Different rotating speeds are selected by changing the levers(no.25).Do not change the speeds while the spindle is rotating. Make sure that the levers are locked at proper position, this is to prevent gears broken. A jog switch (No.30) is available on the electric cabinet panel which is for selecting the rotating and good help for engaging the gears (levers).

chart 2.

40	630	160
80	1250	315
112	1800	450
56	900	224

I. Speed range when the electric frequency 50Hz

According to the different electric frequency of the motor chosen, 50Hz or 60Hz, there is a table listed for each choice, 50Hz or 60Hz, which is offered by 12 steps of variable speed for spindle running.

48	756	192
96	1500	378
134	2160	540
67	1080	269

II. Speed range when the electric frequency 60Hz

Especially, the following instructions must be performed by all means. As follows :

1. After changing the position of the change gear lever and before the spindle running again. Please give the change gear lever a little shaking toward the right, then toward the left to confirm whether the change gear lever is at the correct position or not.

2. In order to avoid the broken damage of the gear and to keep the gear with the longest life for effective working, absolutely the change gear lever located at the correct position must be checked before the motor is powered again.

4.4.2 OVERARM SPINDLE OPERATION (Fig9A) AND SPEED CHANGE

Different rotating speeds are selected by changing the lever (No. 43, 43-1, & 43-2). Do not change the speeds while the spindle is rotating. Make sure that the levers are locked at proper position, this is to prevent gears broken. A jog switch (No.28) is available on the electric cabinet panel which is for selecting the rotating and good help for engaging the gears (Levers).

Chart. 1

35	50	71	100	140	200
280	400	560	800	1120	1600

I . Speed range when electric frequency is 50 Hz

According to the different electric frequency of the motor chosen, 50Hz or 60Hz, there is a table listed for each choice, 50Hz or 60Hz, which is offered by 12 steps of variable speed for spindle running.

(please refer chart.1)

II . Speed range when electric frequency is 60 Hz

42	60	85	120	168	240
336	480	672	960	1344	1960

Especially, the following instructions must be. Performed by all means as follows:

1. After changing the position of the change gear lever and before the spindle running again, please give the change gear lever a little shaking toward the right, then toward the left to confirm whether the change gear lever is at the correct position or not.

2. In order to avoid the broken damage of the gear and to keep the gear with the longest life for effectively working, the change gear lever located at the correct position must be checked before the motor is powered again.

4.5 TABLE OPERATION

FIG. BG-63-1

A. If the table is targeted to be moved toward column as the dircetion of the arrow shown on the name plate, the operating procedures are instructed as follows :

(1) At first, press the button 7, then move the change gear lever (shown FIG. BG — 63 — 1) from the disengaging position shown at the center, marked with broken lines, of the fig. Bg — 63 — 1 to the engaging position shown up of the FIG. Bg — 63 — 1. If so the table will be moved toward column. If the opposite direction which table moves away from column is target. Please press the button 8 to stop. Then as soon as the button 9 is pressed, the table will be moved away from column.

(2) Following the first procedure (l) furthermore, the rapid feed of the table is needed. Directly press the button l2 and the table will be rapidly feeding.

B. If the table is targeted to be moved down, the operating procedures are instructed as follows :

(1) At first, press the button 7, then move the change gear lever (shown FIG. BG — 63 — 1) from the disengaging position shown at the center, marked with broken lines, of the FIG. BG — 63 — 1 to the engaging position shown

down of the FIG. BG — 63 — 1. If so, the table will be moved down. If the opposite direction which table move upwards is targeted, please press the button 8 to stop. Then, as soon as the button 9 is pressed, the table will be moved upwards.

(2)Following the first procedure (1), furthermore, the rapid feed of the table is needed. Directly press the button l2 and the table will be rapidly feeding.

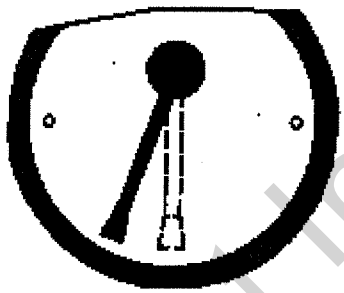

FIG. BB — 67 — 1

1. As the name plate of FIG. BB — 67 — 1 shown, as long as the change gear lever is moved from the disengaging position shown at the center, marked with broken lines, of the FIG. BB — 67 — 1 to the engaging position shown up, marked with solid lines, of the FIG. BB — 67 — 1, the table will be moved right or moved left.
2. If the table is targeted to be moved left, the operating are instructed as follows :

At first, press the button 7, then move the change gear lever (shown FIG. BB — 67 — 1) from the disengaging position to the engaging position. If so, the table will be moved to the left. If the opposite direction which table is moved right is targeted, please press the button 8 to stop. Then, as soon as the button 9 is pressed, the table will be moved to the right.

Swivel table.(see fig.7A)

A 45° to both right & left are available. Please loosen nut no.16 (4 pcs) and move to the angle required. Then tighten nut no.16 (4 pcs) again .

the degree will be given by the scale.

4.6 OVERARM OPERATION

Manual Movement:
Loosen the clamping bolts (No.9).Move the ram to the required position (See scale on ram) by turning the lever (No.20) and then fasten the clamping bolts again. (See Fig.8A & 9A)
Motorized Movement (Optional):
A A.C. motor with gear box instead of manual leaver (No.20) will be fitted. The driver for A.C. motor will be supplied to control forward & reverse movement. An additional control knob fitted on the control panel.

4.7 CLAMPING DEVICE

4.7.1 TABLE CLAMPING

And should always be clamped when longitudinal is not required.
All machines with swivel table as standard function. If the machine is running at certain angle of table, then the clamping bolts (Part No.16, See fig.7A) should be always clamped properly. Loosen the bolts before you turn the table back to the original position & then re-clamp it.

4.7.2 KNEE CLAMPING

The knee clamping lever is at the right side of the knee. Leave clamped at all times unless using knee in operation.
Before you move table, saddle or knee, please be sure that all the clampers should be loosen (Part No.11)
And clamp it when you are moving the other axis. For example, if the cross movement is under process, then the clampers for Longitudinal & Vertical axis should be tighten. This is to ensure a precision cutting.

4.7.3 ARM CLAMPING

The ram should be always clamped properly. There are two clamping bolts at left hand-side (Front view). Loosen the bolts before you move the arm to the position and clamp it before you use it. The bracket should be always clamped properly on the slide ways of ram. This is to ensure a precision result when you have heavy cutting.

4.8 SWARF REMOVING

when removing swarf, firstly turn off the power and stop the revolution of the spindle,then wear gloves to take off the swarf.

4.9 MULTIANGULAR HEAD

POSITIONS THE CUTTER-SPINDLE CAN FEATURE

A.– The position OU of the Cutter-spindle is defined by a reference thiedron whose vertix is "O", and by the vertical axis OX, the horizontal axis OY parallel to the table spindle, and the horizontal axis OZ perpendicular to the table spindle too.

B.– The Cutter-spindle may be driven to the selected OU position through two swiveling motions (See Fig. 3).
1.–By the Back Headpiece which swivels round the horizontal axis OZ, and.
2.–By the Cutterhead which swivels round an axis that features a 45° angle as to the horizontal axis OZ.
These two blocks are provided with graduated circles going from 0° to 360°.

A vernier on each block points on the graduated circle involved and thus their position becomes evident.

GREASING

This Universal Milling Head is supplied topped up with G.P.M. ANSULIT grease.

The grease inside the shells vary between 300-400 gm.
– Greasing frequency: Once a week.
– Amount of grease: 1 cm3 per greasing point.

Greases are never to be mixed with each other.

HOW TO POSITION THE MILLING HEAD BY USING THE TABLES

The Tables provided on the following pages are used so as to determine the angles of the two blocks that make up the milling head and thus obtain the desired operating angle.

The Back Headpiece angles are to be read in columns b3, b2, b1, and B1, B2, B3, whereas the ones of the Cutterhead are shown in columns Pf and pf.

FOR A BETTER UNDERSTANDING, THE POSITIONS OF THE CUTTER-SPINDLE SHALL BE DESCRIBED THROUGH FIVE MAIN CASES.

FIRST CASE (Fig. 4)

The Cutter-spindle is placed at a vertical plane OX-OY parallel to the table spindle.

Here a is considered as the angle created by the Cutter-spindle related to the vertical axis.

In this case the Tables are unnecessary since by swiveling the Back Headpiece to the angle desired, the Cutter-spindle angle is thus obtained.

The Cutter-spindle angle shall be 180°.

Example: This case comes about when milling a chamfer whose angle is 10° as to the vertical axis, considering the cross travel of the table.

SECOND CASE (Fig. 5)

SCREW MILLING (Fig. 10)

The Cutter-spindle should be set at an horizontal plane OY OZ.

Angle a is the one produced by the Cutter-spindle facing a perpendicular plane to the table spindle.

The divisions concerning the Cutterhead and the Back Headpiece are given in Table N° 1.

The a angle we wish to produce is to be read in column F, which shall give us the values PF and B1, or pf and b1, considering whether the spindle shaft is to operate to the right or to the left.

Example: When milling a right hand screw featuring a 30° angle related to the horizontal axis OY (See fig. 11), the following steps are to be considered.

Look for the 30° screw angle in the central column F, then read the given figures on the same line in column B1. The reading shall give us 344° 27' for the Back Headpiece, and column PF shall give us 317° 04' for the Cutterhead.

When milling a left hand screw of 30° related to the horizontal axis OY (See Fig. 12), the following steps are to be considered.

Look for the 30° screw angle in the central column F, then read the given figures on the same line in column b1. The reading shall give us here 15° 33' for the Back Headpiece, and column pf shall give us 42° 56' for the Cutterhead.

THIRD CASE (Fig. 6)

The Cutter-spindle OU should be set at the symmetry vertical plane of the milling machine OX OZ, and produce an angle b related to the horizontal plane.

By swiveling the Cutter-head round the Back Headpiece, the spindle is shifted either to the left or to the right of the symmetry plane of the machine.

Instead of the two positions the cutter-spindle can create a b angle as to the horizontal plane, we shall have four positions placed as to the vertical planes parallel to the symmetry plane of the machine, depending whether the spindle is bent upwards or downwards, and that the vertical plane involved is either to the right or to the left of the symmetry plane (See Fig. 14, 15, 16 and 17).

According to the position selected in column F, Table 1, the divisions corresponding to the cutterhead and to the Back Headpiece are to be read in the same line in the following columns:

– PF and B2 if the spindle is bent to the right and downwards.
– PF and B3 if the spindle is bent to the left and upwards.
– pf and b2 if the spindle is bent to the left and downwards.
– pf and b3 if the spindle is bent to the right and upwards.

Example: Suppose b is a 30° angle, we shall locate 30° in column F, and we shall have that.
PF = 317° 04' and B2 = 74° 27'. The spindle shall be bent to the right and downwards (Fig. 14).
PF = 317° 04' and B3 = 254° 27'. The spindle shall be bent to the left and upwards (Fig. 17).
pf = 42° 56' and b2 = 285° 33'. The spindle shall be bent to the left and downwards (Fig. 15).
pf = 42° 56' and b3 = 105° 33'. The spindle shall be bent to the right and upwards (Fig. 16).

FOURTH CASE (Fig. 7)

The Cutter-spindle OU should be placed at the bisecting plane OX OY and OX OZ.

Here we shall work by using perpendicular travels (longitudinal and cross movements of the table), to say, two flat surfaces creating the same angle e as to the horizontal plane.

The practical procedure to follow is the following:

1° - Read on Table N° 2 the value of the intermediary angle a corresponding to the angle e we wish to produce.

Example: If e = 75° read in column F
We obtain a = 75° 29' in Table N° 2

2° - Search in Table N° 1 the graduation for the Cutterhead corresponding to angle a.

Example: If a = 75° 29' read in column F
We obtain PF = 240° 05' in column PF

3° - Read on the same Table the graduations for the Back Headpiece —as stated in the third case— (referred to the position desired for the Cutter-spindle) (Fig. 9), and add 90° deducting a.

Example: Let the position desired be: The spindle nose to the right looking downwards.
If a = 75° 29' read in column F
We obtain B = 39° 16' in column B2
90° - e = 90° - 75° = 15°
Thus B = 39° 16' − 15° = 24° 16'
or B = 39° 16' + 15° = 54° 16'

FIFTH CASE (Fig. 8)

General case: The Cutter-spindle should be at a position OU determined by the angles, that produce with the horizontal its two projections over the planes OX OY or OX OZ.

This is the case when the Cutter-spindle is wanted to be given such a position that:
— By the longitudinal travel of the table, a flat surface can be machined creating an e angle as to the horizontal plane.
— By the cross travel of the table, a flat surface can be machined creating an angle d as to the horizontal plane.

As stated in the Fourth Case, an intermediary angle a is to be calculated at first.

This angle shall be obtained by means of a simple trigonometrical calculation following the formula below:

$$\text{tg } a = \frac{\text{tg } e}{\text{sen } d}$$

That is to say that on the same Table it should be read the corresponding values B2 (or B3, or b2, or b3) and add to them 90° - d, which shall give us 8 different solutions to this problem depending whether the spindle nose is looking unpwards or downwards, bent to the left or right, that is to say, to the left or right of the symmetry plane of the machine (See Fig. 9).

Example:

Sea e = 65° d = 70°

$$\text{tg } a = \frac{\text{tg } 65°}{\text{sen } 70°}$$

With the trigonometric Tables we find that:
tg 65° = 2,1445
sen 70° = 0,93969

$$\text{tg } a = \frac{2,1445}{0,93969} = 2,2821$$

a = 66° 20'

Let us go back to Table N° 1: If we want that the Cutter-spindle be on the right of the symmetry plane of the milling machine and the cutter looking downwards, our reading shall be:

Graduation of the Cutterhead PF = 258° 39'
Graduation of the Back Headpiece B2 = 49° 11'

to which we have to add 90° - 70° = 20°

B = 29° 11' - Spindle nose on the right, looking downwards, bent to the left.
B = 69° 11' - Spindle nose on the right, looking downwards, bent to the right.

SUMMARY

FIRST CASE

The Cutter-spindle is to be bent at a vertical plane parallel to the table spindle.

Just swivel the Back Headpiece and set it at the desired angle, either to the right or to the left, starting from the vertical position Zero.

For this first case, the Cutterhead shall always be fixed on the 180° scale, and only the Back Headpiece shall be swiveled.

The Tables are unnecessary for this procedure.

SECOND CASE

The Cutter-spindle should be bent towards the horizontal planes.

This position is obtained by swiveling both the heads. These positions are generally used for milling screws with the horizontal spindle.

To do so, select the desired angle for the spindle nose in the Table central column F, and then read the possibilities along the same line.

Where milling a left hand screw (Fig. 12), the angle the Back Headpiece is to be swiveled must be read in column b1, and the one of the Cutterhead should be read in column pf.

THIRD CASE

The Cutter-spindle should be bent respect to the vertical planes perpendicular to the table spindle (Fig. 13, 14, 15, 16 und 17).

Select in the central column F the angle desired for the cutter (Fig. 13), then read on the same line the angle for the Back Headpiece, to say, B2 or B3 or b2 or b3, and the angle for the Cutterhead on the same line in columns Pf or pf, according to the position desired for the spindle, regarding the four figures 14, 15, 16 or 17.

Where the spindle nose is bent:
— To the right and downwards, read column PF and B2 (Fig. 14).
— To the left downwards, read column pf and b2 (Fig. 15).
— To the right and upwards, read column pf and b3 (Fig. 16).
— To the left and upwards, read column PF and B3 (Fig. 17).

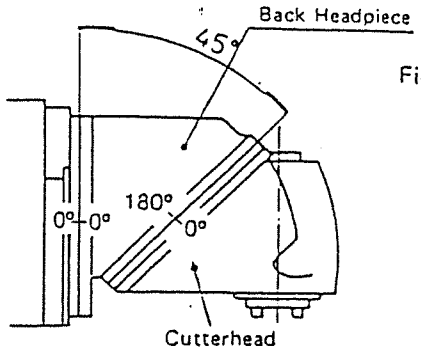

Fig. 3

Fig. 4

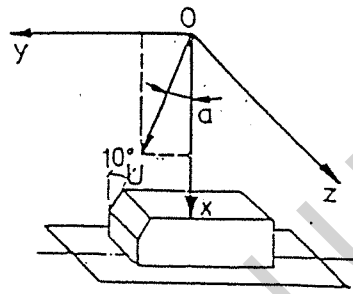

First Case: Axis on the vertical plane OX OY

Fig. 5

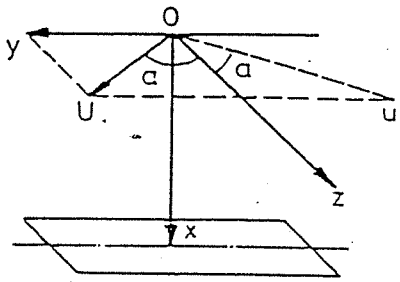

Second Case: Axis on the horizontal plane OY OZ

Fig. 6

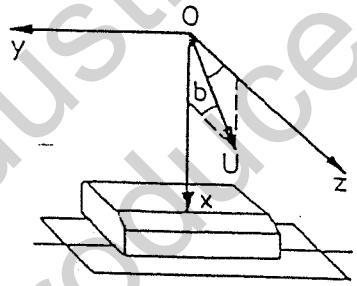

Third Case: Axis on the vertical plane OX OZ

Fig. 7

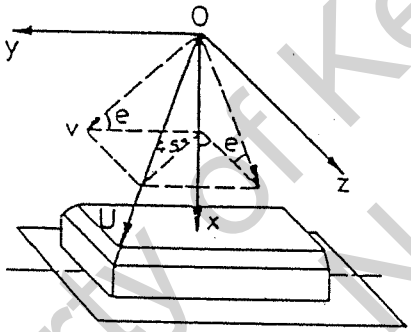

Fourth Case: Axis on the bisecting plane OX OY and OX OZ

Fig. 8

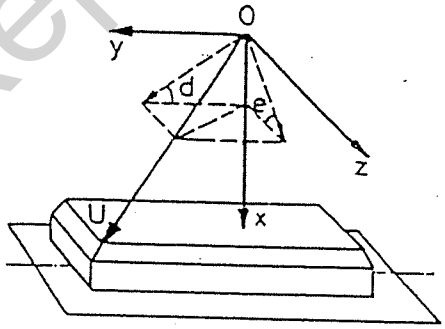

Fifth Case: General Case

Sketch showing the eight possible positions of the Cutter-spindle displayed in cases fourth and fifth.

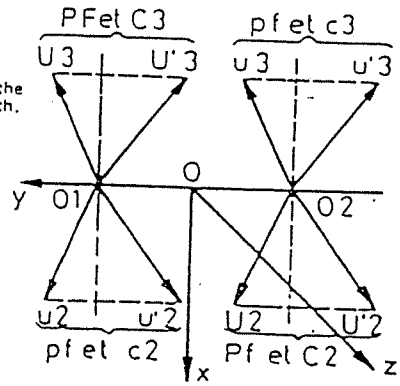

Fig. 9

Fig. 10

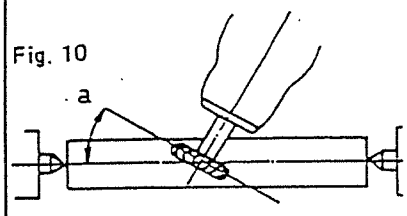

Second Case: Milling screws with the horizontal axis at a low position.

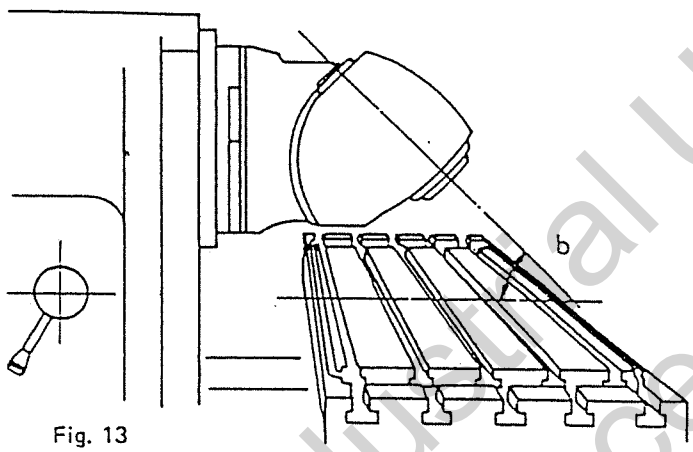

Fig. 13

With an axis on a vertical plane and perpendicular plane of the axis corresponding to the table spindle.

Screw to the right

Fig. 11

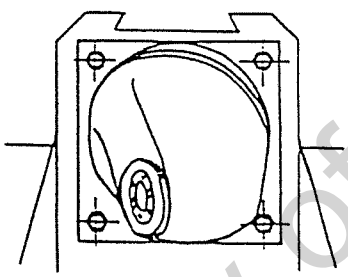

Angle a=30°; Back Headpiece B1=344° 27'; Cutterhead PF=317° 04'.

To the right — Spindle nose downwards

Fig. 14

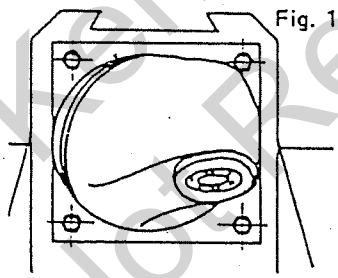

Angle b=30°; Back Headpiece B2=74° 27'; Cutterhead PF=317° 04'

To the left — Spindle nose downwards

Fig. 15

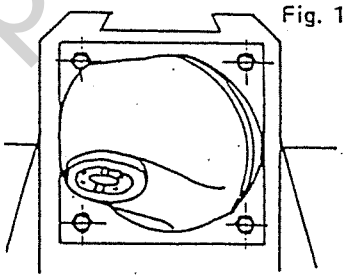

Angle b=30°; Back Headpiece b2=285° 33'; Cutterhead pf=42° 56'.

Screw to the left

Fig. 12

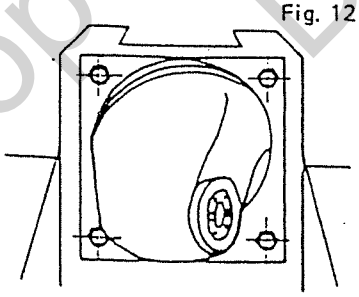

Angle a=30°; Back Headpiece b1=15° 33'; Cutterhead pf=42° 56'.

To the right — Spindle nose upwards

Fig. 16

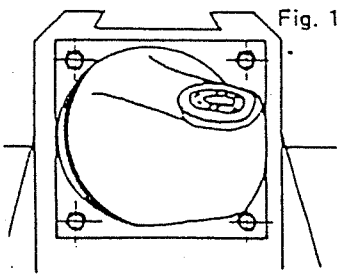

Angle b=30°; Back Headpiece b3=105° 33'; Cutterhead pf=42° 56'.

To the left — Spindle nose upwards

Fig. 17

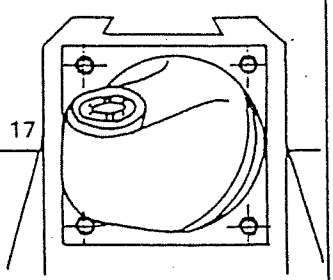

Angle b=30°; Back Headpiece B3 B3=254° 27'; Cutterhead PF=317° 04'.

TABLES

3	1									2
	BACK HEADPIECE			CUTTER-HEAD	AXIS ANGLE	CUTTER-HEAD	BACK HEADPIECE			
	Spindle (right-upwards)						Spindle (right-upwards)			
	Spindle (left-downwards)					Spindle (right-downwards)				
	Left screw					Right screw				
	b3	b2	b1	pf	F	PF	B1	B2	B3	
0,000 00 0,008 73	90° 90° 15'	270° 270° 15'	0° 0° 15'	0° 0° 42'	0° 0° 30'	360° 359° 28'	360° 359° 45'	90° 89° 45'	270° 269° 45'	45° 45°
0,017 45 0,026 18	90° 30' 90° 45'	270° 30' 270° 45'	0° 30' 0° 45'	1° 24' 2° 07'	1° 1° 30'	358° 36' 357° 53'	359° 30' 359° 15'	89° 30' 89° 15'	269° 30' 269° 15'	45° 45°
0,034 90 0,043 62	91° 91° 15'	271° 271° 15'	1° 1° 15'	2° 49' 3° 32'	2° 2° 30'	357° 11' 356° 28'	359° 358° 45'	89° 88° 45'	269° 268° 45'	45° 01' 45° 02'
0,052 34 0,061 05	91° 30' 91° 45'	271° 30' 271° 45'	1° 30' 1° 45'	4° 14' 4° 56'	3° 3° 30'	355° 46' 355° 04'	358° 30' 358° 15'	88° 30' 88° 15'	268° 30' 268° 15'	45° 02' 45° 03'
0,069 76 0,078 46	92° 92° 16'	272° 272° 16'	2° 2° 16'	5° 39' 6° 21'	4° 4° 30'	354° 21' 353° 39'	358° 357° 44'	88° 87° 44'	268° 267° 44'	45° 04' 45° 05'
0,087 16 0,095 85	92° 31' 92° 46'	272° 31' 272° 46'	2° 31' 2° 46'	7° 04' 7° 46'	5° 5° 30'	352° 56' 352° 14'	357° 29' 357° 14'	87° 29' 87° 14'	267° 29' 267° 14'	45° 07' 45° 08'
0,104 53 0,113 20	93° 01' 93° 16'	273° 01' 273° 16'	3° 01' 3° 16'	8° 29' 9° 11'	6° 6° 30'	351° 31' 350° 49'	356° 59' 356° 44'	86° 59' 86° 44'	266° 59' 266° 44'	45° 08' 45° 11'
0,121 87 0,130 53	93° 30' 93° 45'	273° 30' 273° 45'	3° 30' 3° 45'	9° 54' 10° 37'	7° 7° 30'	350° 06' 349° 23'	356° 30' 356° 15'	86° 30' 86° 15'	266° 30' 266° 15'	45° 13' 45° 15'
0,139 17 0,147 81	94° 01' 94° 16'	274° 01' 274° 16'	4° 01' 4° 16'	11° 20' 12° 03'	8° 8° 30'	348° 40' 347° 57'	355° 59' 355° 44'	85° 59' 85° 44'	265° 59' 265° 44'	45° 17' 45° 19'
0,156 43 0,165 05	94° 31' 94° 46'	274° 31' 274° 46'	4° 31' 4° 46'	12° 45' 13° 27'	9° 9° 30'	347° 15' 346° 33'	355° 29' 355° 14'	85° 29' 85° 14'	265° 29' 265° 14'	45° 21' 45° 24'
0,173 65 0,182 24	95° 01' 95° 16'	275° 01' 275° 16'	5° 01' 5° 16'	14° 10' 14° 52'	10° 10° 30'	345° 50' 345° 08'	354° 59' 354° 44'	84° 59' 84° 44'	264° 59' 264° 44'	45° 26' 45° 29'
0,190 81 0,199 37	95° 32' 95° 47'	275° 32' 275° 47'	5° 32' 5° 47'	15° 35' 16° 18'	11° 11° 30'	344° 25' 343° 42'	354° 28' 354° 13'	84° 28' 84° 13'	264° 28' 264° 13'	45° 32' 45° 35'
0,207 91 0,216 44	96° 02' 96° 17'	276° 02' 276° 17'	6° 02' 6° 17'	17° 17° 43'	12° 12° 30'	343° 342° 17'	353° 58' 353° 43'	83° 58' 83° 43'	263° 58' 263° 43'	45° 38' 45° 41'
0,224 95 0,233 45	96° 33' 96° 48'	276° 33' 276° 48'	6° 33' 6° 48'	18° 26' 19° 08'	13° 13° 30'	341° 34' 340° 52'	353° 27' 353° 12'	83° 27' 83° 12'	263° 27' 263° 12'	45° 45' 45° 48'
0,241 92 0,250 38	97° 03' 97° 19'	277° 03' 277° 19'	7° 03' 7° 19'	19° 51' 20° 33'	14° 14° 30'	340° 09' 339° 27'	352° 57' 352° 41'	82° 57' 82° 41'	262° 57' 262° 41'	45° 52' 45° 56'
0,258 82 0,267 24	97° 34' 97° 49'	277° 34' 277° 49'	7° 34' 7° 49'	21° 16' 21° 59'	15° 15° 30'	338° 44' 338° 01'	352° 26' 352° 11'	82° 26' 82° 11'	262° 26' 262° 11'	46° 46° 04'
0,275 64 0,284 02	98° 05' 98° 20'	278° 05' 278° 20'	8° 05' 8° 20'	22° 42' 23° 25'	16° 16° 30'	337° 18' 336° 35'	351° 55' 351° 40'	81° 55' 81° 40'	261° 55' 261° 40'	46° 08' 46° 12'
0,292 37 0,300 71	98° 36' 98° 51'	278° 36' 278° 51'	8° 36' 8° 51'	24° 08' 24° 51'	17° 17° 30'	335° 52' 335° 09'	351° 24' 351° 09'	81° 24' 81° 09'	261° 24' 261° 09'	46° 17' 46° 21'
0,309 02 0,317 30	99° 07' 99° 22'	279° 07' 279° 22'	9° 07' 9° 22'	25° 34' 26° 17'	18° 18° 30'	334° 26' 333° 43'	350° 53' 350° 38'	80° 53' 80° 38'	260° 53' 260° 38'	46° 26' 46° 31'
0,325 57 0,333 81	99° 38' 99° 54'	279° 38' 279° 54'	9° 38' 9° 54'	27° 27° 43'	19° 19° 30'	333° 332° 17'	350° 22' 350° 06'	80° 22' 80° 06'	260° 22' 260° 06'	46° 36' 46° 41'
0,342 02 0,350 21	100° 09' 100° 25'	280° 09' 280° 25'	10° 09' 10° 25'	28° 26' 29° 09'	20° 20° 30'	331° 34' 330° 51'	349° 51' 349° 35'	79° 51' 79° 35'	259° 51' 259° 35'	46° 47' 46° 52'
0,358 37 0,366 50	100° 41' 100° 57'	280° 41' 280° 57'	10° 41' 10° 57'	29° 52' 30° 35'	21° 21° 30'	330° 08' 329° 25'	349° 19' 349° 03'	79° 19' 79° 03'	259° 19' 259° 03'	46° 58' 47° 04'
0,374 61 0,382 68	101° 13' 101° 28'	281° 13' 281° 28'	11° 13' 11° 28'	31° 18' 32° 01'	22° 22° 30'	328° 42' 327° 59'	348° 47' 348° 32'	78° 47' 78° 32'	258° 47' 258° 32'	47° 10' 47° 16'
	b3	b2	b1	pf	F	PF	B1	B2	B3	

COLUMNS

TABLES

3	1									2
	BACK HEADPIECE			CUTTER-HEAD	AXIS ANGLE	CUTTER-HEAD	BACK HEADPIECE			
	Spindle (right-upwards) / Spindle (left-downwards) / Left screw					Spindle (left-upwards) / Spindle (right-downwards) / Right screw				
	b3	b2	b1	pf	F	PF	B1	B2	B3	
0,390 73 0,398 75	101° 44' 102°	281° 44' 282°	11° 44' 12°	32° 45' 33° 28'	23° 23° 30'	327° 15' 326° 32'	348° 16' 348°	78° 16' 78°	258° 16' 258°	47° 22' 47° 29'
0,406 74 0,414 69	102° 16' 102° 32'	282° 16' 282° 32'	12° 16' 12° 32'	34° 12' 34° 55'	24° 24° 30'	325° 48' 325° 05'	347° 44' 347° 28'	77° 44' 77° 28'	257° 44' 257° 28'	47° 35' 47° 42'
0,422 62 0,430 51	102° 48' 103° 05'	282° 48' 283° 05'	12° 48' 13° 05'	35° 39' 36° 22'	25° 25° 30'	324° 21' 323° 38'	347° 12' 346° 55'	77° 12' 76° 55'	257° 12' 256° 55'	47° 49' 47° 56'
0,438 37 0,446 20	103° 21' 103° 37'	283° 21' 283° 37'	13° 21' 13° 37'	37° 06' 37° 49'	26° 26° 30'	322° 54' 322° 11'	346° 39' 346° 23'	76° 39' 76° 23'	256° 39' 256° 23'	48° 03' 48° 10'
0,453 99 0,461 75	103° 53' 104° 10'	283° 53' 284° 10'	13° 53' 14° 10'	38° 33' 39° 16'	27° 27° 30'	321° 27' 320° 44'	346° 07' 345° 50'	76° 07' 75° 50'	256° 07' 255° 50'	48° 18' 48° 27'
0,469 47 0,477 16	104° 26' 104° 43'	284° 26' 284° 43'	14° 26' 14° 43'	40° 40° 44'	28° 28° 30'	320° 319° 16'	345° 34' 345° 17'	75° 34' 75° 17'	255° 34' 255° 17'	48° 33' 48° 41'
0,484 81 0,492 42	104° 59' 105° 16'	284° 59' 285° 16'	14° 59' 15° 16'	41° 28' 42° 12'	29° 29° 30'	318° 32' 317° 48'	345° 01' 344° 44'	75° 01' 74° 44'	255° 01' 254° 44'	48° 50' 48° 58'
0,500 00 0,507 54	105° 33' 105° 49'	285° 33' 285° 49'	15° 33' 15° 49'	42° 56' 43° 40'	30° 30° 30'	317° 04' 316° 20'	344° 27' 344° 11'	74° 27' 74°11'	254° 27' 254° 11'	49° 06' 49° 15'
0,515 04 0,522 50	106° 06' 106° 23'	286° 06' 286° 23'	16° 06' 16° 23'	44° 24' 45° 08'	31° 31° 30'	315° 36' 314° 52'	343° 54' 343° 37'	73° 54' 73° 37'	253° 54' 253° 37'	49° 24' 49° 33'
0,529 92 0,537 30	106° 40' 106° 57'	286° 40' 286° 57'	16° 40' 16° 57'	45° 53' 46° 37'	32° 32° 30'	314° 07' 313° 23'	343° 20' 343° 03'	73° 20' 73° 03'	253° 20' 253° 03'	49° 42' 49° 51'
0,544 64 0,551 94	107° 14' 107° 31'	287° 14' 287° 31'	17° 14' 17° 31'	47° 21' 48° 05'	33° 33° 30'	312° 39' 311° 55'	342° 46' 342° 29'	72° 46' 72° 29'	252° 46' 252° 29'	50° 01' 50° 10'
0,559 19 0,566 51	107° 48' 108° 05'	287° 48' 288° 05'	17° 48' 18° 05'	48° 50' 49° 35'	34° 34° 30'	311° 10' 310° 25'	342° 12' 341° 55'	72° 12' 71° 55'	252° 12' 251° 55'	50° 20' 50° 30'
0,573 58 0,580 70	108° 23' 108° 40'	288° 23' 288° 40'	18° 23' 18° 40'	50° 20' 51° 04'	35° 35° 30'	309° 40' 308° 56'	341° 37' 341° 20'	71° 37' 71° 20'	251° 37' 251° 20'	50° 41' 50° 51'
0,587 79 0,594 82	108° 58' 109° 16'	288° 58' 289° 16'	18° 58' 19° 16'	51° 49' 52° 34'	36° 36° 30'	308° 11' 307° 26'	341° 02' 340° 44'	71° 02' 70° 44'	251° 02' 250° 44'	51° 01' 51° 12'
0,601 82 0,608 76	109° 33' 109° 51'	289° 33' 289° 51'	19° 33' 19° 51'	53° 19' 54° 04'	37° 37° 30'	306° 41' 305° 56'	340° 27' 340° 09'	70° 27' 70° 09'	250° 27' 250° 09'	51° 23' 51° 34'
0,615 66 0,622 51	110° 08' 110° 26'	290° 08' 290° 26'	20° 08' 20° 26'	54° 49' 55° 34'	38° 38° 30'	305° 11' 304° 26'	339° 52' 339° 34'	69° 52' 69° 34'	249° 52' 249° 34'	51° 46' 51° 57'
0,629 32 0,636 08	110° 44' 111° 02'	290° 44' 291° 02'	20° 44' 21° 02'	56° 20' 57° 05'	39° 39° 30'	303° 40' 302° 55'	339° 16' 338° 58'	69° 16' 68° 58'	249° 16' 248° 58'	52° 09' 52° 21'
0,642 79 0,649 45	111° 21' 111° 39'	291° 21' 291° 39'	21° 21' 21° 39'	57° 51' 58° 36'	40° 40° 30'	302° 09' 301° 24'	338° 39' 338° 21'	68° 39' 68° 21'	248° 39' 248° 21'	52° 33' 52° 45'
0,656 06 0,662 62	111° 57' 112° 16'	291° 57' 292° 16'	21° 57' 22° 16'	59° 22' 60° 07'	41° 41° 30'	300° 38' 299° 53'	338° 03' 337° 44'	68° 03' 67° 44'	248° 03' 247° 44'	52° 57' 53° 10'
0,669 13 0,675 59	112° 34' 112° 53'	292° 34' 292° 53'	22° 34' 22° 53'	60° 54' 61° 39'	42° 42° 30'	299° 06' 298° 21'	337° 26' 337° 07'	67° 26' 67° 07'	247° 26' 247° 07'	53° 23' 53° 36'
0,682 00 0,688 35	113° 12' 113° 31'	293° 12' 293° 31'	23° 12' 23° 31'	62° 26' 63° 11'	43° 43° 30'	297° 34' 296° 49'	336° 48' 336° 29'	66° 48' 66° 29'	246° 48' 246° 29'	53° 49' 54° 03'
0,694 66 0,700 91	113° 50' 114° 09'	293° 50' 294° 09'	23° 50' 24° 09'	63° 58' 64° 44'	44° 44° 30'	296° 02' 295° 16'	336° 10' 335° 51'	66° 10' 65° 51'	246° 10' 245° 51'	54° 16' 54° 30'
0,707 11 0,713 25	114° 29' 114° 48'	294° 29' 294° 48'	24° 29' 24° 48'	65° 31' 66° 17'	45° 45° 30'	294° 29' 293° 43'	335° 31' 335° 12'	65° 31' 65° 12'	245° 31' 245° 12'	54° 44' 54° 58'
	b3	b2	b1	pf	F	PF	B1	B2	B3	

COLUMNS

TABLES

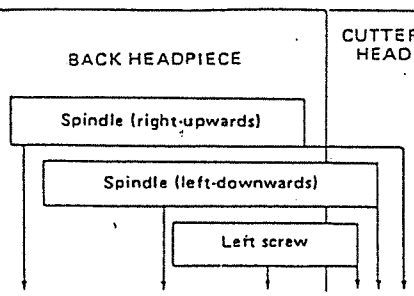

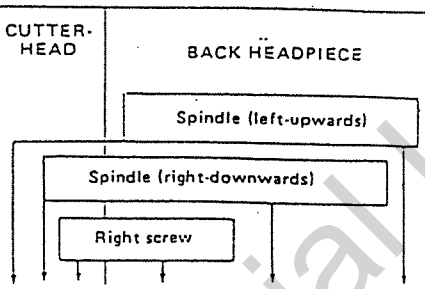

3	1									2
	b3	b2	b1	pf	F	PF	B1	B2	B3	
0,719 34 0,725 37	115° 07' 115° 27'	295° 07' 295° 27'	25° 07' 25° 27'	67° 04' 67° 51'	46° 46° 30'	292° 56' 292° 09'	334° 53' 334° 33'	64° 53' 64° 33'	244° 53' 244° 33'	55° 13' 55° 27'
0,731 35 0,737 28	115° 46' 116° 05'	295° 46' 296° 06'	25° 46' 26° 06'	68° 38' 69° 26'	47° 47° 30'	291° 22' 290° 34'	334° 14' 333° 54'	64° 14' 63° 54'	244° 14' 243° 54'	55° 42' 55° 57'
0,743 14 0,748 96	116° 26' 116° 46'	296° 26' 296° 46'	26° 26' 26° 46'	70° 13' 71° 01'	48° 48° 30'	289° 47' 288° 59'	333° 34' 333° 14'	63° 34' 63° 14'	243° 34' 243° 14'	56° 13' 56° 28'
0,754 71 0,760 41	117° 07' 117° 27'	297° 07' 297° 27'	27° 07' 27° 27'	71° 48' 72° 35'	49° 49° 30'	288° 12' 287° 25'	332° 53' 332° 33'	62° 53' 62° 33'	242° 53' 242° 33'	56° 44' 57°
0,766 04 0,771 62	117° 48' 118° 08'	297° 48' 298° 08'	27° 48' 28° 08'	73° 23' 74° 11'	50° 50° 30'	286° 37' 285° 49'	332° 12' 331° 52'	62° 12' 61° 52'	242° 12' 241° 52'	57° 16' 57° 32'
0,777 15 0,782 61	118° 29' 118° 50'	298° 29' 298° 50'	28° 29' 28° 50'	74° 59' 75° 48'	51° 51° 30'	285° 01' 284° 12'	331° 31' 331° 10'	61° 31' 61° 10'	241° 31' 241° 10'	57° 49' 58° 06'
0,788 01 0,793 35	119° 11' 119° 33'	299° 11' 299° 33'	29° 11' 29° 33'	76° 36' 77° 25'	52° 52° 30'	283° 24' 282° 35'	330° 49' 330° 27'	60° 49' 60° 27'	240° 49' 240° 27'	58° 23' 58° 40'
0,798 64 0,803 86	119° 54' 120° 16'	299° 54' 300° 16'	29° 54' 30° 16'	78° 14' 79° 03'	53° 53° 30'	281° 46' 280° 57'	330° 06' 329° 44'	60° 06' 59° 44'	240° 06' 239° 44'	58° 58' 59° 15'
0,809 02 0,814 12	120° 38' 121°	300° 38' 301°	30° 38' 31°	79° 52' 80° 42'	54° 54° 30'	280° 08' 279° 18'	329° 22' 329°	59° 22' 59°	239° 22' 239°	59° 33' 59° 51'
0,819 15 0,824 13	121° 22' 121° 45'	301° 22' 301° 45'	31° 22' 31° 45'	81° 31' 82° 21'	55° 55° 30'	278° 29' 277° 39'	328° 38' 328° 15'	58° 38' 58° 15'	238° 38' 238° 15'	60° 10' 60° 28'
0,829 04 0,833 89	122° 07' 122° 30'	302° 07' 302° 30'	32° 07' 32° 30'	83° 11' 84° 01'	56° 56° 30'	276° 49' 275° 59'	327° 53' 327° 30'	57° 53' 57° 30'	237° 53' 237° 30'	60° 47' 61° 05'
0,838 67 0,843 39	122° 53' 123° 16'	302° 53' 303° 16'	32° 53' 33° 16'	84° 52' 85° 42'	57° 57° 30'	275° 08' 274° 18'	327° 07' 326° 44'	57° 07' 56° 44'	237° 07' 236° 44'	61° 26' 61° 45'
0,848 05 0,852 64	123° 40' 124° 04'	303° 40' 304° 04'	33° 40' 34° 04'	86° 33' 87° 24'	58° 58° 30'	273° 27' 272° 36'	326° 20' 325° 56'	56° 20' 55° 56'	236° 20' 235° 56'	62° 05' 62° 25'
0,857 17 0,861 63	124° 27' 124° 51'	304° 27 304° 51'	34° 27' 34° 51'	88° 16' 89° 07'	59° 59° 30'	271° 44' 270° 53'	325° 33' 325° 09'	55° 33' 55° 09'	235° 33' 235° 09'	62° 45' 63° 05'
0,866 03 0,870 36	125° 16' 125° 40'	305° 16' 305° 40'	35° 16' 35° 40'	90° 90° 52'	60° 60° 30'	270° 269° 08'	324° 44' 324° 20'	54° 44' 54° 20'	234° 44' 234° 20'	63° 26' 63° 47'
0,874 62 0,878 82	126° 05' 126° 31'	306° 05' 306° 31'	36° 05' 36° 31'	91° 44' 92° 37'	61° 61° 30'	268° 16' 267° 23'	323° 55' 323° 29'	53° 55' 53° 29'	233° 55' 233° 29'	64° 08' 64° 29'
0,882 95 0,887 01	126° 56' 127° 22'	306° 56' 307° 22'	36° 56' 37° 22'	93° 30' 94° 23'	62° 62° 30'	266° 30' 265° 37'	323° 04' 322° 38'	53° 04' 52° 38'	233° 04' 232° 38'	64° 51' 65° 13'
0,891 01 0,894 93	127° 48' 128° 14'	307° 48' 308° 14'	37° 48' 38° 14'	95° 16' 96° 10'	63° 63° 30'	264° 44' 263° 50'	322° 12' 321° 46'	52° 12' 51° 46'	232° 12' 231° 46'	65° 35' 65° 57'
0,898 79 0,902 59	129° 40' 129° 07'	308° 40' 309° 07'	38° 40' 39° 07'	97° 04' 97° 59'	64° 64° 30'	262° 56' 262° 01'	321° 20' 320° 53'	51° 20' 50° 53'	231° 20' 230° 53'	66° 20' 66° 43'
0,906 31 0,909 96	129° 34' 130° 02'	309° 34' 310° 02'	39° 34' 40° 02'	98° 54' 99° 49'	65° 65° 30'	261° 06' 260° 11'	320° 26' 319° 58'	50° 26' 49° 58'	230° 26' 229° 58'	67° 05' 67° 28'
0,913 55 0,917 06	130° 30' 130° 58'	310° 30' 310° 58'	40° 30' 40° 58'	100° 44' 101° 40'	66° 66° 30'	259° 16' 258° 20'	319° 30' 319° 02'	49° 30' 49° 02'	229° 30' 229° 02'	67° 52' 68° 16'
0,920 50 0,923 58	131° 27' 131° 56'	311° 27' 311° 56'	41° 27' 41° 56'	102° 36' 103° 33'	67° 67° 30'	257° 24' 256° 27'	318° 33' 318° 04'	48° 33' 48° 04'	228° 33' 228° 04'	68° 39' 69° 05'
	b3	b2	b1	pf	F	PF	B1	B2	B3	

COLUMNS

TABLES

3	1									2
	BACK HEADPIECE			CUTTER-HEAD	AXIS ANGLE	CUTTER-HEAD	BACK HEADPIECE			
	Spindle (right-upwards)					Spindle (left-upwards)				
	Spindle (left-downwards)					Spindle (left-downwards)				
	Left screw					Right screw				
	b3	b2	b1	pf	F	PF	B1	B2	B3	
0,927 18 0,930 42	132° 25' 132° 55'	312° 25' 312° 55'	42° 25' 42° 55'	104° 30' 105° 28'	68° 68° 30'	255° 30' 254° 32'	317° 35' 317° 05'	47° 35' 47° 05'	227° 35' 227° 05'	69° 28' 69° 52'
0,933 58 0,936 67	133° 25' 133° 56'	313° 25' 313° 56'	43° 25' 43° 56'	106° 26' 107° 25'	69° 69° 30'	253° 34' 252° 35'	316° 35' 316° 04'	46° 35' 46° 04'	226° 35' 226° 04'	70° 17' 70° 42'
0,939 69 0,942 64	134° 27' 134° 58'	314° 27' 314° 58'	44° 27' 44° 58'	108° 24' 109° 24'	70° 70° 30'	251° 36' 250° 36'	315° 33' 315° 02'	45° 33' 45° 02'	225° 33' 225° 02'	71° 07' 71° 32'
0,945 52 0,948 32	135° 30' 136° 03'	315° 30' 316° 03'	45° 30' 46° 03'	110° 24' 111° 25'	71° 71° 30'	249° 36' 248° 35'	314° 30' 313° 57'	44° 30' 43° 57'	224° 30' 223° 57'	71° 58' 72° 24'
0,951 06 0,953 72	136° 36' 137° 09'	316° 36' 317° 09'	46° 36' 47° 09'	112° 26' 113° 29'	72° 72° 30'	247° 34' 246° 31'	313° 24' 312° 51'	43° 24' 42° 51'	223° 24' 222° 51'	72° 50' 73° 16'
0,956 30 0,958 82	137° 44' 138° 19'	317° 44' 318° 19'	47° 44' 48° 19'	114° 32' 115° 35'	73° 73° 30'	245° 28' 244° 25'	312° 16' 311° 41'	42° 16' 41° 41'	222° 16' 221° 41'	73° 42' 74° 09'
0,961 26 0,963 63	138° 54' 139° 30'	318° 54' 319° 30'	48° 54' 49° 30'	116° 38' 117° 43'	74° 74° 30'	243° 22' 242° 17'	311° 06' 310° 30'	41° 06' 40° 30'	221° 06' 220° 30'	74° 35' 75° 02'
0,965 93 0,968 15	140° 07' 140° 44'	320° 07' 320° 44'	50° 07' 50° 44'	118° 48' 119° 55'	75° 75° 30'	241° 12' 240° 05'	309° 53' 309° 16'	39° 53' 39° 16'	219° 53' 219° 16'	75° 29' 75° 57'
0,970 30 0,972 37	141° 23' 142° 02'	321° 23' 322° 02'	51° 23' 52° 02'	121° 02' 122° 11'	76° 76° 30'	238° 58' 237° 49'	308° 37' 307° 58'	38° 37' 37° 58'	218° 37' 217° 58'	76° 24' 76° 52'
0,974 37 0,976 30	142° 42' 143° 23'	322° 42' 323° 23'	52° 42' 53° 23'	123° 20' 124° 30'	77° 77° 30'	236° 40' 235° 30'	307° 18' 306° 37'	37° 18' 36° 37'	217° 18' 216° 37'	77° 19' 77° 47'
0,978 15 0,979 92	144° 04' 144° 47'	324° 04' 324° 47'	54° 04' 54° 47'	125° 42' 126° 55'	78° 78° 30'	234° 18' 233° 05'	305° 56' 305° 13'	35° 56' 35° 13'	215° 56' 215° 13'	78° 15' 78° 43'
0,981 63 0,983 25	145° 31' 146° 16'	325° 31' 326° 16'	55° 31' 56° 16'	128° 10' 129° 26'	79° 79° 30'	231° 50' 230° 34'	304° 29' 303° 44'	34° 29' 33° 44'	214° 29' 213° 44'	79° 12' 79° 40'
0,984 81 0,986 29	147° 03' 147° 51'	327° 03' 327° 51'	57° 03' 57° 51'	130° 44' 132° 02'	80° 80° 30'	229° 16' 227° 58'	302° 57' 302° 09'	32° 57' 32° 09'	212° 57' 212° 09'	80° 09' 80° 38'
0,987 69 0,989 02	148° 39' 149° 30'	328° 39' 329° 30'	58° 39' 59° 30'	133° 22' 134° 44'	81° 81° 30'	226° 38' 225° 16'	301° 21' 300° 30'	31° 21' 30° 30'	211° 21' 210° 30'	81° 07' 81° 36'
0,990 27 0,991 44	150° 23' 151° 17'	330° 23' 331° 17'	60° 23' 61° 17'	136° 08' 137° 36'	82° 82° 30'	223° 52' 222° 24'	299° 37' 298° 43'	29° 37' 28° 43'	209° 37' 208° 43'	82° 05' 82° 34'
0,992 55 0,993 57	152° 13' 153° 12'	332° 13' 333° 12'	62° 13' 63° 12'	139° 06' 140° 39'	83° 83° 30'	220° 54' 219° 21'	297° 47' 296° 48	27° 47' 26° 48'	207° 47' 206° 48'	83° 03' 83° 33'
0,994 52 0,995 40	154° 13' 155° 17'	334° 13' 335° 17'	64° 13' 65° 17'	142° 14' 143° 53'	84° 84° 30'	217° 46' 216° 07'	295° 47' 294° 43'	25° 47' 24° 43'	205° 47' 204° 43'	84° 02' 84° 31'
0,996 19' 0,996 92	156° 24' 157° 35'	336° 24' 337° 35'	66° 24' 67° 35'	145° 36' 147° 24'	85° 85° 30'	214° 24' 212° 36'	293° 36' 292° 25'	23° 36' 22° 25'	203° 36' 202° 25'	85° 01' 85° 31'
0,997 56 0,998 13	158° 50' 160° 10'	338° 50' 340° 10'	68° 50' 70° 10'	149° 18' 151° 20'	86° 86° 30'	210° 42' 208° 40'	291° 10' 289° 50'	21° 10' 19° 50'	201° 10' 199° 50'	86° 01' 86° 30'
0,998 63 0,999 05	161° 37' 163° 12'	341° 37' 343° 12'	71° 37' 73° 12'	153° 28' 155° 48'	87° 87° 30'	206° 32' 204° 12'	288° 23' 286° 48'	18° 23' 16° 48'	198° 23' 196° 48'	87° 87° 30'
0,999 39 0,999 66	164° 57' 166° 57'	344° 57' 346° 57'	74° 57' 76° 57'	158° 22' 161° 17'	88° 88° 30'	201° 38' 198° 43'	285° 03' 283° 03'	15° 03' 13° 03'	195° 03' 193° 03'	88° 88° 30'
0,999 85 0,999 96	169° 20' 172° 27'	349° 20' 352° 27'	79° 20' 82° 27'	164° 40' 169° 04'	89° 89° 30'	195° 20' 190° 56'	280° 40' 277° 33'	10° 40' 7° 33'	190° 40' 187° 33'	89° 89° 30'
1,000 00	180°	360°	90°	180°	90°	180°	270°	0°	180°	90°
	b3	b2	b1	pf	F	PF	B1	B2	B3	

COLUMNS

4.10 TROUBLE SHOOTING

TROUBLE SHOOTING CHART		
TROUBLE	PROBABLE CAUSE	CORRECTION
Incorrect spindle rotation	the switch knob indicated at the wrong position	change it to the correct position
Vibration	1.Loose leveling screws 2.Foundation losed	1.Set all adjust the level 2.Check foundation bolts.
Chatter	1.Tool bit improperly ground or not on center 2.Improper spindle speed. 3.Feed rate too higher too low 4.Gibs of cross slide or compound rest loose 5.Spindle bearings worn	1.Regrind tool bit or adjust tool holder so that area of contact between tool bit and work is decreased. 2.Reduce or increase spindle speed. 3.Reduce or increase feedrate. 4.Adjust gibs. 5.Adjust spindle bearings
Spindle doesn't rotate	1.poor motor. 2.driving belt too slack. 3.poor contact on the switch.	1.change or repair the motor. 2.adjust the belt. 3.check the switch.
Abnormal spindle feed	quill clamping lever unreleased	release clamping lever.
Spindle brake fails	brake shoe worn out	replace it
Table for vertical,cross longitudinal move unsmoothly.	1.Gib strip too tight. 2.poor lubrication.	1.Release it. 2.Check the lubrication system.

CHAPTER 5

ADJUSTMENT AND MAINTENANCE

WARNING: Turn off the machine before removing any cover(guard) and making adjustment

2500 series Universal Mills are designed for wide range purpose. It's required to make sure that all levers, clampers or knob are setted at proper position whenever you use the machine.

5.1 ADJUSTMENT

1. All wheels are fitted with spring-clutch. Operator should always check if it's working properly and adjust the spring if required.

2. All levers for speed-change, or manual feed are locking by spring, please make sure that the spring been fitting properly which is to ensure all operation safety and easy to change over.

3. Gib adjustment:
   All slide ways can be adjusted by the gib. Please refer to the following reference and always adjust every certain period of running.

3-1 Gib of Ram:
Located in left dovetail way. And to be adjusted from the back of ram.

3-2 Gib of Knee Vert.:
Located in left-hand side of slide way (But right side of the left side slide way).

3-3 Gib of Cross Slide:
Located in left-hand side of the slide way.

3-4 Gib of Table:
Located in front dovetail way.

3-5 Clutch Adjustment (for feed gear box):
Please refer to the drawing as attached. It's required to take whole feed box off and then adjust as below:

5.1.1 MAIN MOTOR ADJUSTMENT

The main spindle torque depends upon the motor power transmitted thru the belts. The maintenance person must check the V-belts tension frequently by adjusting nut A if it becomes loose. After the milling machine is operated for a period of time, if the tools and the R.P.M. of the spindle still run normally, but the horizontal spindle is something wrong to stop easily, while milling. Please open the cover of the main motor located in the back of the machine to check whether the belt of the motor is tool loose or not.

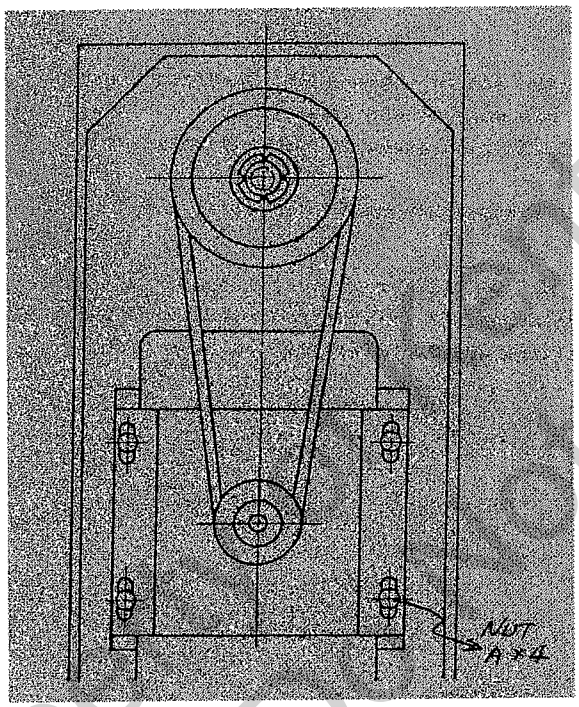

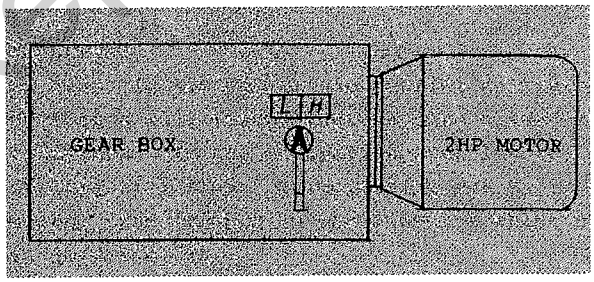

FIG. 13

There are two different positions, H and L , on the outer cover of 2HP gear box. When the " L " is chosen,the machine can be perated for end-mill cutter for slow feeding or using long milling arbor for heavy & duty cutting. On the contrary, the " H " is chosen, also can operate the machine for facing cutter. While changing from " H " to " L " or from " L " to " H ", the speed of 2HP must be kept running. Simultaneously, the engaging and disengaging of the table must be controlled at the position of disengaging.

5.1.2 FEED LOADING ADJUSTMENT

A safety device been tighten before the machine delivered. A group of safety spring will ensure that machine always running under normal condition. If the machine is over loaded, then the spring-ball coupling will slip. By adjusting Nut B, it will give you proper couling. And be sure to open Cover A . which been install inside of knee. (See Fig.15)

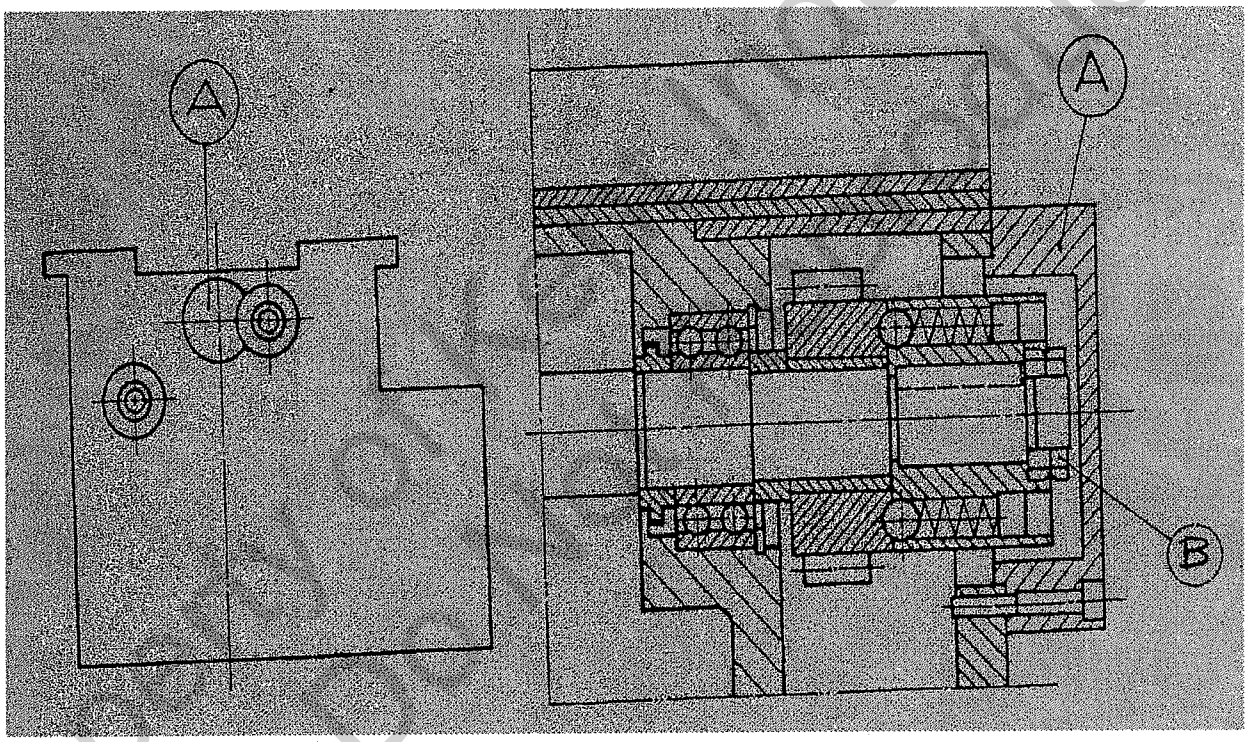

FIG .15

5.1.3 HORIZONTAL SPINDLE ADJUSTMENT

To ensure an excellent result of milling. All machine spindle are mounted by precision class bearings (A & B). But for various milling condition, some adjustment of bearing loading always required. Please open the side cover on column and adjusting the Nut C mounting
If the spindle is over heat, then loosen the Nut C required. But no matter make it tighten or loosen, always test the spindle running by hand, make sure the spindle is smoothly running.(See Fig.16)

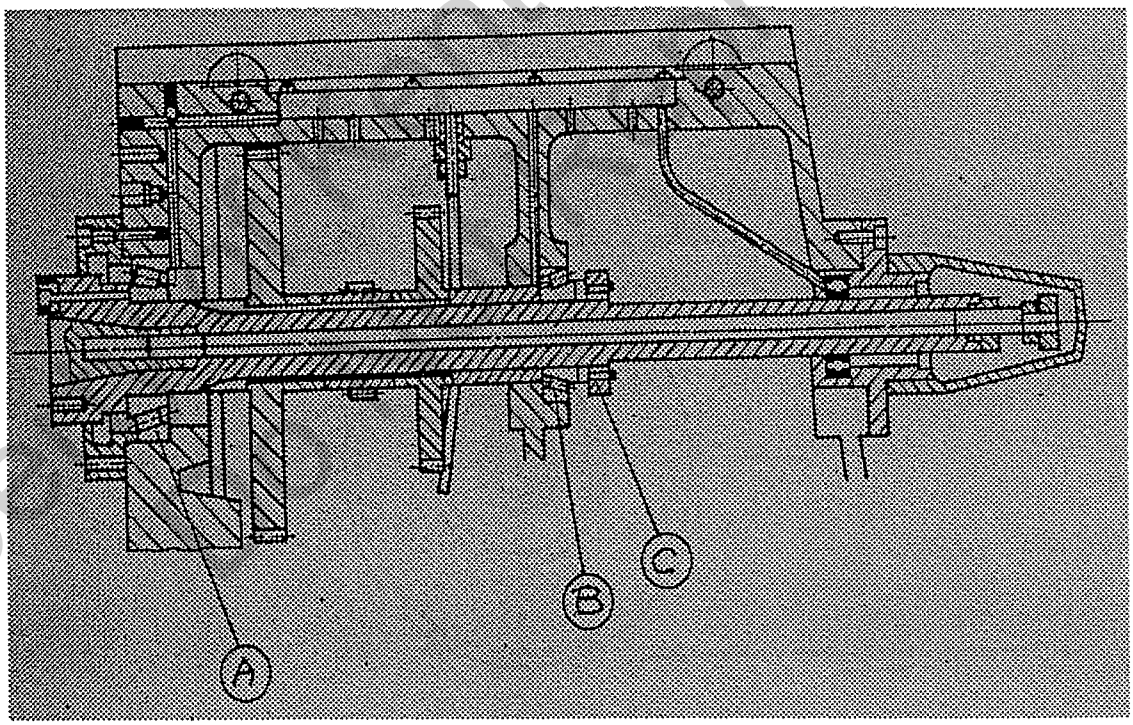

FIG. 16

5.1.4 LONGITUDINAL FEED ADJUSTMENT

Some play may happened when machine is under the condition of longitudinal feed. An adjusting knob is available in left front of table. Please refer to Fig.17 and do some adjustment when it is required.
Please refer to the tag direction and adjust it.

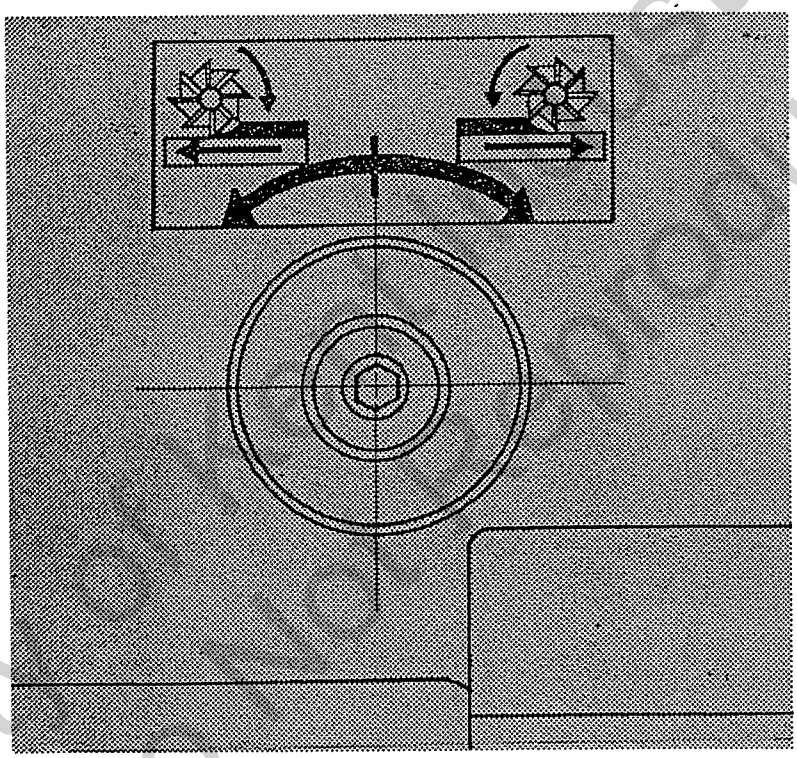

Fig. 17

The 2500 series of machines are equipped with double-nuts lead screw for adjusting the backlash of the lead screw , which is controlled by the black handknob mounted on each machine. Anyway, don't swivel the black handknob to adjust the backlash of the lead screw for those new machines, because those new machines are with new lead screws set to suitable backlash in advance. Therefore, the backlash has fallen within tolerance.

5.2 MAINTENANCE PROGRAM

5.2.1 DAILY MAINTENANCE

(a) Check the oil level of lubricating oil tank. When the oil amount is below the standard, please fill it anytime.

(b) Check every lubricating parts and make sure that the lubricating situation of oil is good.

(c) When the machine is started, check if the coolant is sufficient and the cooling device can work well.

(d) Clear the obstruction on the machine to avoid destroying the machine.

(e) After the work is finished, please keep the machine clean anytime and apply grease to the exposed slide surface to avoid rusting.

(f) Pay attention to the running of the machine anytime. if anything wrong happened, please turn off the machine immediately and check it.

5.2.2 WEEKLY MAINTENANCE

(a) Make sure that the chuck is tightened and its loosening action is smooth.

(b) Check if the oilier is normal.

5.2.3 HALF-YEAR MAINTENANCE

(a) Check if the screw or nut is loosen.

(b) Check if the gap of taper gib of every slide rail is too large.

(c)Check if every wiring is good and clean the accumulated dust.

5.2.4 YEARLY MAINTENANCE

(a) Check if every controlling button or switch on control panel is normal and sensitive.

(b) Wash coolant tank and replace equivalent coolant.

(c) Adjust machine's level.

(d) Wash lubricating oil tank and replace equivalent new oil.

5.3 LUBRICATION AND COOLANT SYSTEM

5.3.1 LUBRICATION AND LUBRICANT

It is most important to lubricate the machine before operating. The operator should be responsible for the proper lubrication of the machine. The grade and quality of lubricants are given in the following oil lubrication table. The instructions in this table are essential to the proper oiling of the internal parts of the machine. Oil levels should be strictly observed, for it is of primary importance for proper operation and long life .

CHART OF LUBRICANTS RECOMMEND

	HORIZONTAL SPINDLE & RAM	FEED GEARBOX	SLIDE WAY	MULTIANGLE HEAD(GREASE)	GREASE FOR SCREWS
ARAL	ARAL VITAM GF32 ARAL VITAM DE32	ARAL VITAM GF68 ARAL VITAM DE68 ARAL VITAM TU68	ARAL DEGANIT B 220	ARALUB HL 2	ARALUB FDP 00 ARALUB FD 00
BP	BP ENERGOL HL32	BP ENERGOL RC68	BP ENERGOL HP-C220	BP ENERGREASE LS-2	BP ENERGREASE HT EP 00
ELF	ELF MISOLA H32	ELF MISOLA H68	ELF MOGLIA 220	ELF ROLEXA 2	ELF EPEXA 0
SHELL	SHELL TELLUS OEL C32	SHELL TELLUS OEL C68	SHELL TONNS OEL T220	SHELL ALVANIA FATT R2	SHELL SIMNIA GREASE 0
MOBIL	MOBIL D.T.E OIL LIGHT	MOBIL D.T.E OIL-HEAVY MDEDIUM	MOBIL VACTRA OIL NO.4	MOBILUX 2	MOBILEX 44 GARGOYIE FATT 1200W

ESSO	TERESSO 32 FIRAX ESSTIC 32	TERESSO 68 ESSTIC 68	FEBISK 220	BEACON 2	FIRAX EP 370 FIBRAX 370
TEXACO	RANDO OIL 32	RANDO OIL 68 WETEX OIL W68	WAY LUBRICANT 220	MULTIFAK 2 MULTIFAK 20	MARFAX 00 GLISSANDO FG 30

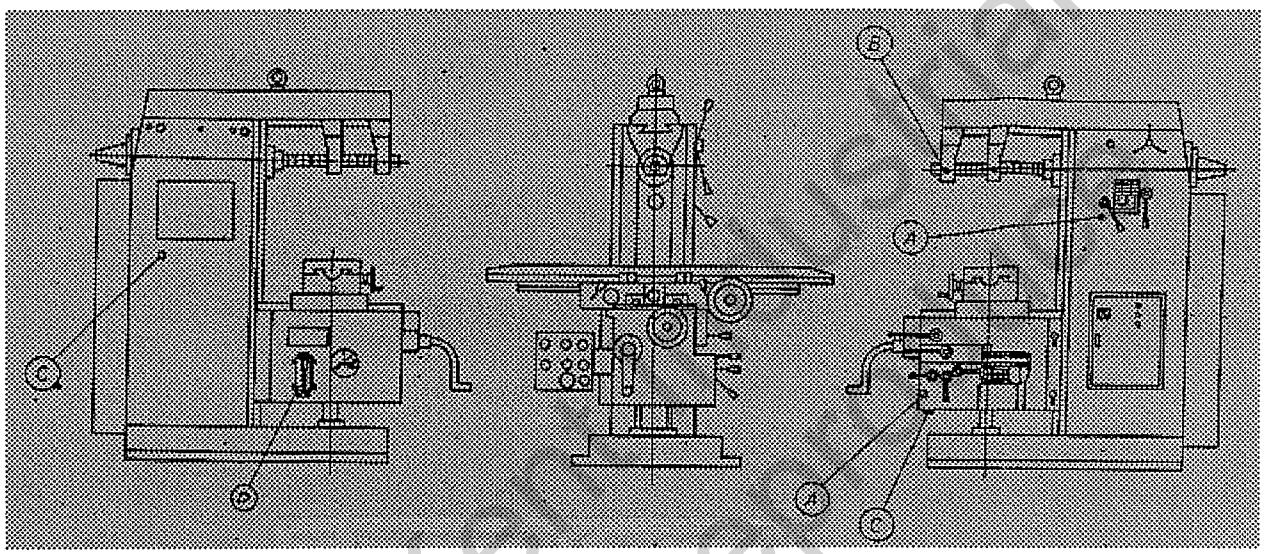

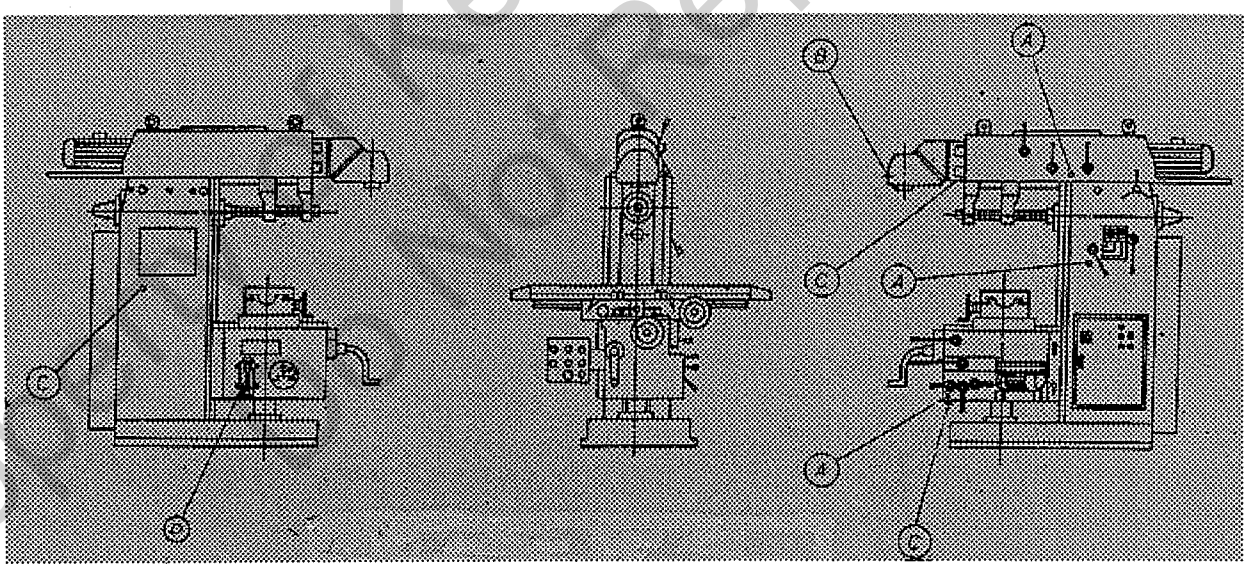

A	oil lubrication	sixmonths
B	grease lubrication	when required
C	oil outlet	
D	oil lubrication	when required

5.3.2 COOLANT SYSTEM

The coolant system has manually controlled by ON/OFF push-button at the operator control panel and has a flexible stork to direct the coolant at the cutting tip.

5.3.2.1 COOLANT SYSTEM FILLING PROCEDURE

1.Turn off the machine before filling the coolant into the machine.

2.POUR the coolant from the coolant inlet at the bottom of the machine Carefully .

3.Clean any overspill on the floor immediately.

4.Power up the machine, then open the coolant tap and run coolant pump to prime the system.

5.3.2.2 COOLANT SYSTEM CLEANING PROCEDURE

1.Use the machine coolant pump to pump out all the coolant into a suitable container.

2.Turn off the machine after all the coolant was pumped out.

3.Clean any overspill on the floor immediately.

4.Fill the coolant tank with proper quantity of coolant.

5.Power on the machine, then open the coolant tap and run coolant pump to prime the system.

For Auto Lubrication Instructions:

CEN02(Resistance Type),CEN04(Pressure-Relief Type) IC Board Instruction:

◆Time Display

1.Operation Time:0-999 sec, as operating, the acting indicator will light up.

2.Interval Time:0-999 min/sec,as intermittence, the interval indicator will light up.

3.When oil level is lower than the standard,the operation time (left) will become "000"and glitter (no oil detection for 30 sec.),and the abnormal indicator will light up.

4.When the pressure is abnormal,the operation time(left) will glitter first,then the interval time (right) will become"000"and glitter(abnormal pressure detection for 60 sec.),and the abnormal indicator will light up.

◆ Time Setup

1.Press the left ◁ button,the operation time will increase,and press F button will decrease.

2.Press the right ▷ button,the interval time will increase,and press F button will decrease.

3.Release the buttons,and after 5 seconds,the IC board will memory the setup.

◆ Feed Oil By Hand

1.Press F button,the oil will feed, and the feed-oil indicator will light up.

2.Release F button,and the oil will stop feeding.

◆ Notice

1.To use for the first time or no oil flows out, please press F button intermittently till the oil flows out,in order to exhaust air.

2.As abnormal situation appears, press F button to stop the abnormal indicator and buzzer,but it will keep detecting if back to normal.

The recommended coolants for ferrous metal are Castrol Syntilor coolant or Mobil Solvac 1535 or equivalent class.

WARNING:

The following precautions should be taken:

-Avoid unnecessary contact with cutting fluid. If any part of your body touch the fluid, please wash it immediately.

-wear protective clothing during operation.

-Change cutting fluids regularly. The recommended frequency is about once a month.

-Dispose of fluids in accordance with statutory regulation.

-Avoid mixing different types of cutting fluids.

-When emptying cutting tanks or lubricant tank the operator must to wear rubber glove for protection .

CHAPTER 6

ELECTRICAL CIRCUIT AND ELECTRIC PARTS LIST

6.1 ELECTRICAL CIRCUIT

MODEL 2500U

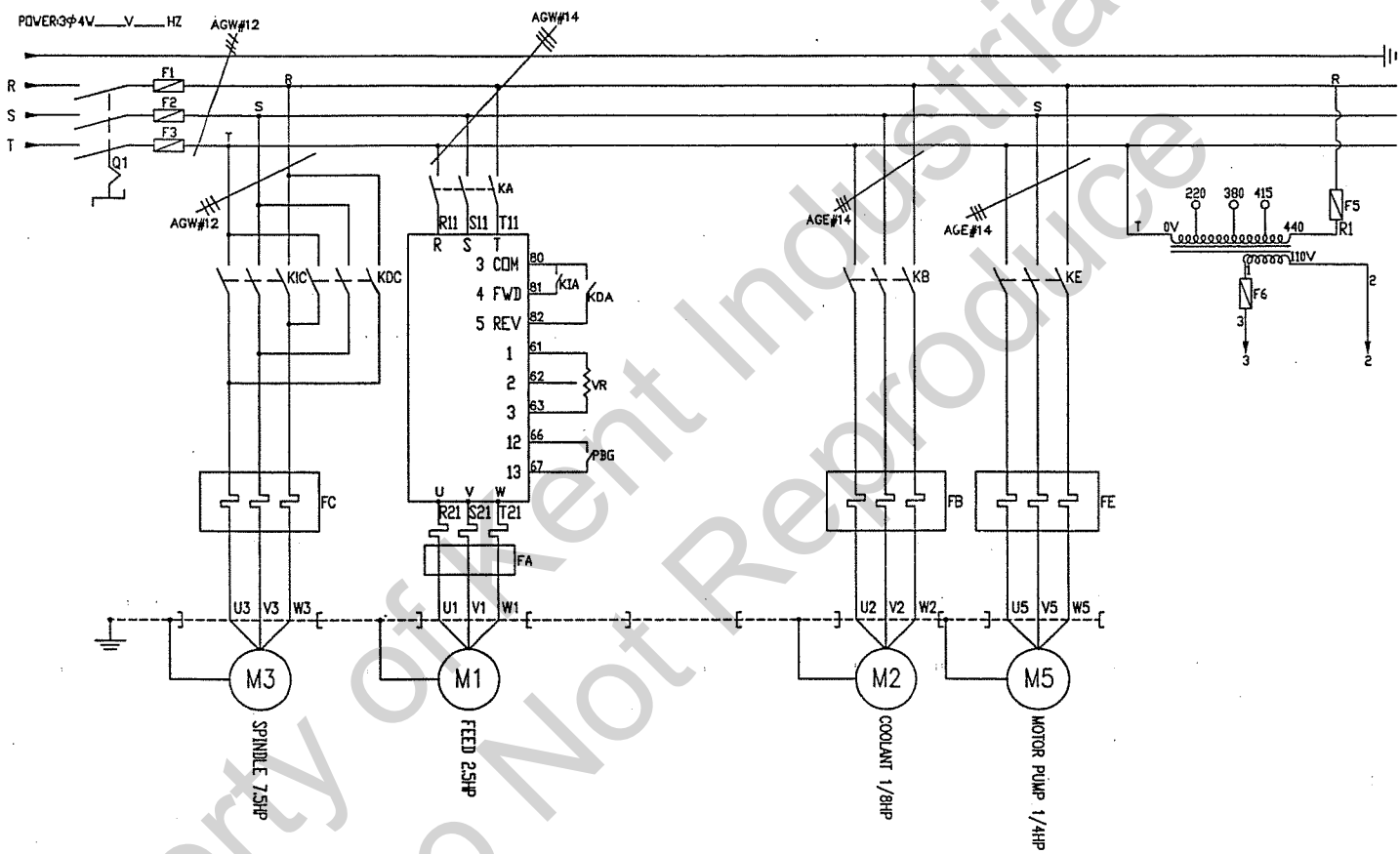

860430BA/4P-1

MODEL 2500U

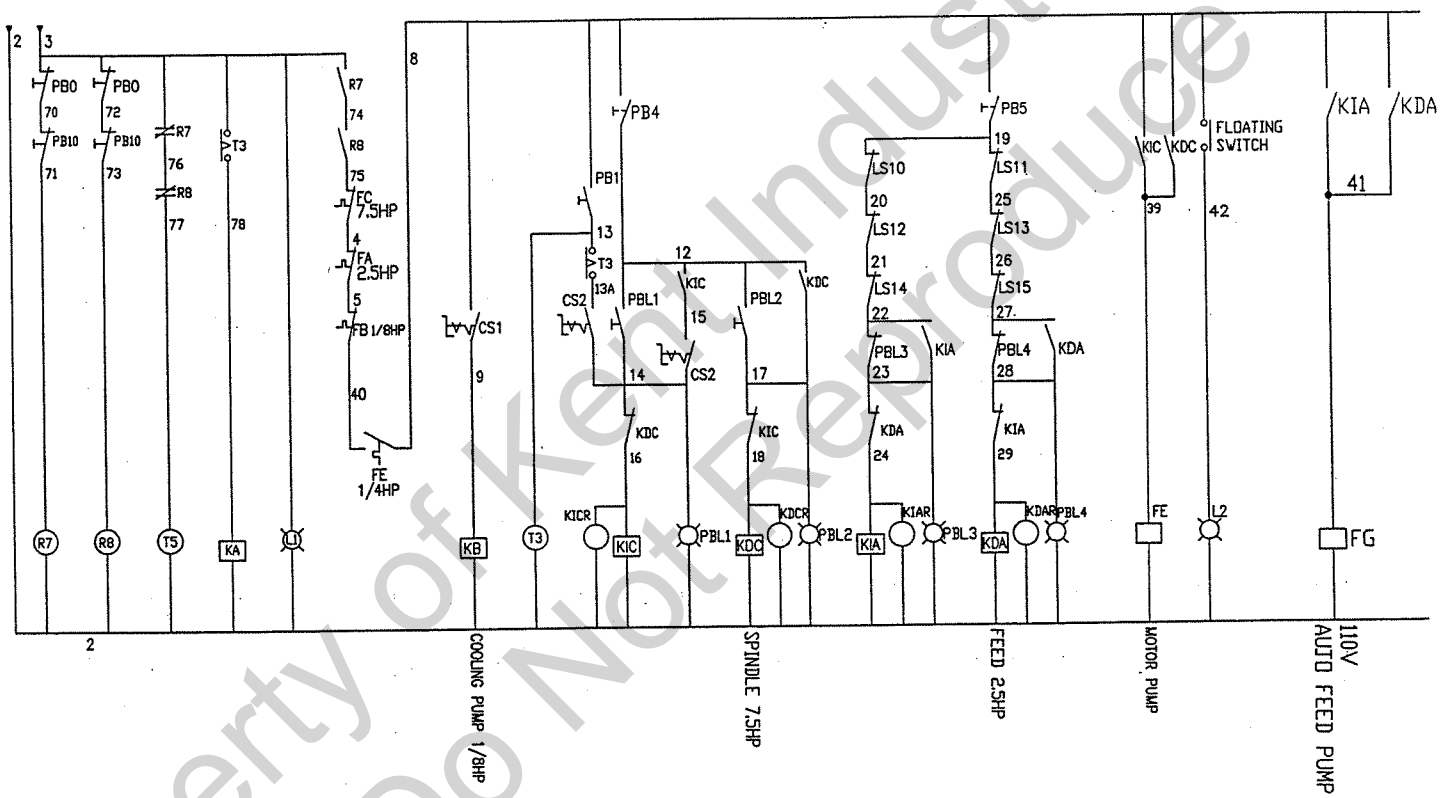

860430BB/4P-2

MODEL 2500U

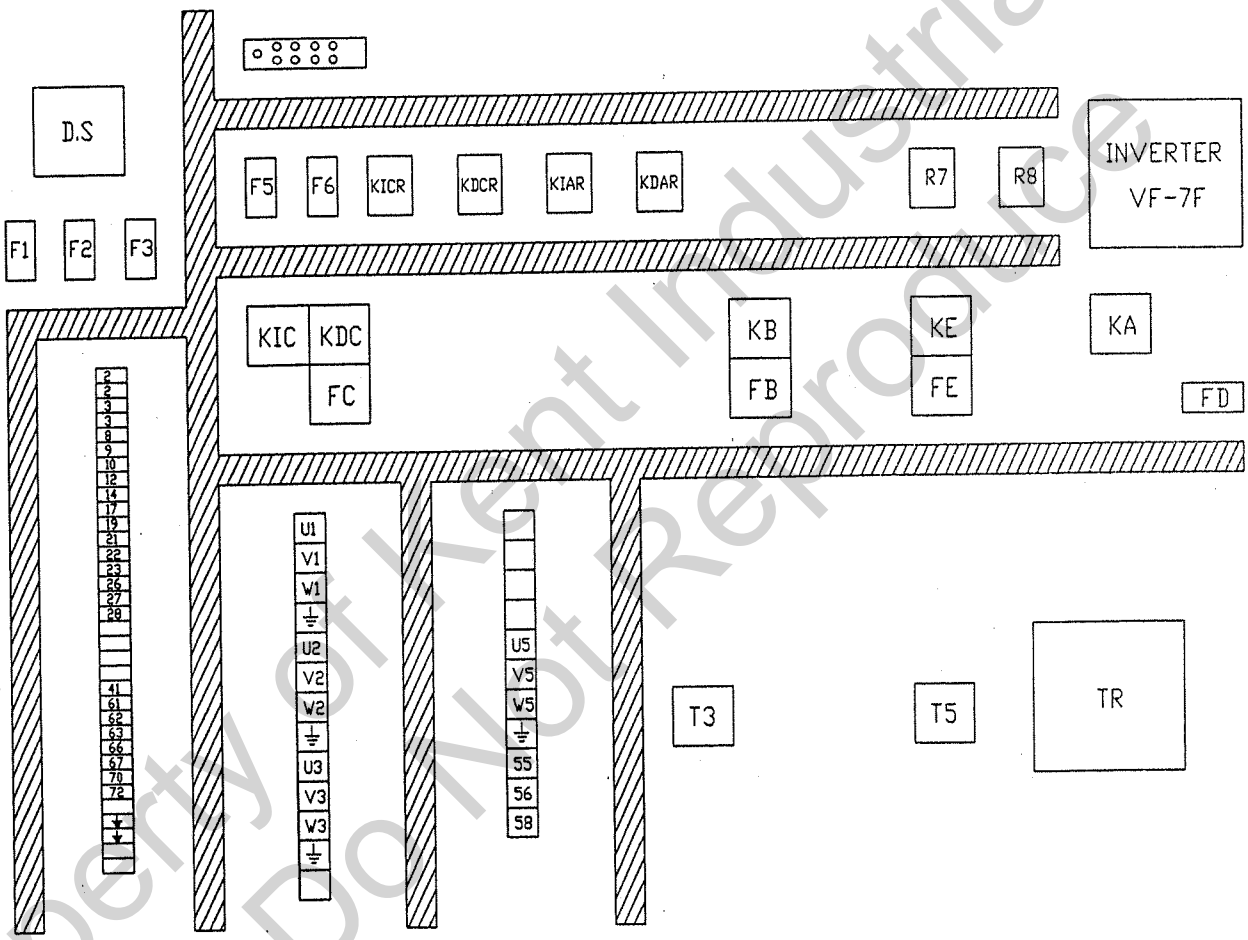

860430BC/4P-3

MODEL 2500U

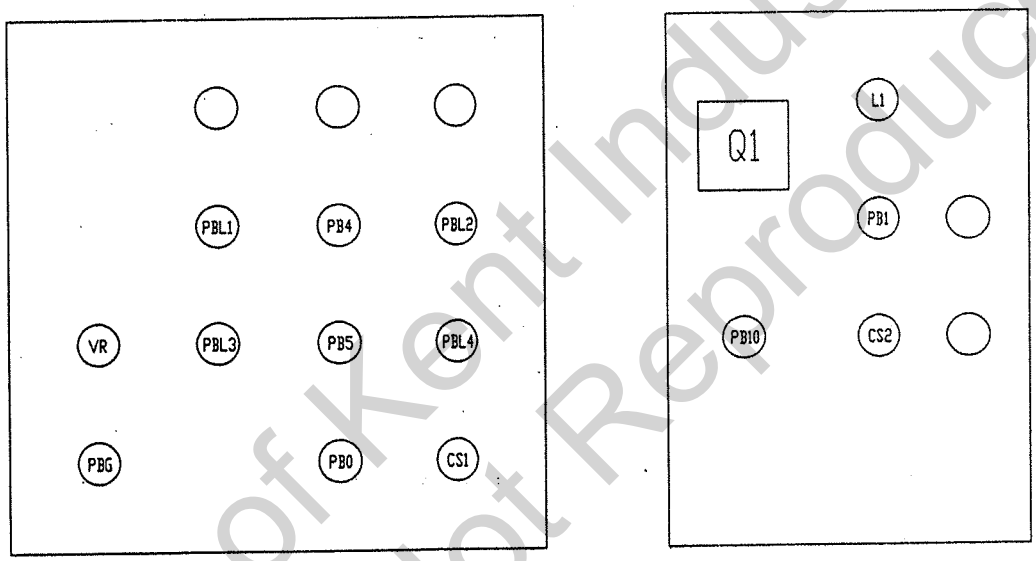

860430BD/4P-4

MODEL 2500U

ELECTRIC PARTS LIST

ITEM DESIGNATION	DESCRIPTION & FUNCTION	MANUFACTURE	TYPE	TECHNIACL DATA
PBL1	FEED FORWARD	YIAN KUANG	22Φ 1a1b 110V W	400V 6A
PB4	FEED STOP	YIAN KUANG	22Φ 1a1b R	400V 6A
PBL2	FEED REVERSE	YIAN KUANG	22Φ 1a1b 110V W	400V 6A
PBL3	SPINDLE FORWARD	YIAN KUANG	22Φ 1a1b 110V W	400V 6A
PB5	SPINDLE STOP	YIAN KUANG	22Φ 1a1b R	400V 6A
PBL4	SPINDLE REVERSE	YIAN KUANG	22Φ 1a1b 110V W	400V 6A
PB0	EMERGENCY STOP	YIAN KUANG	22Φ 1a1b R	400V 6A
CS1	COOLING PUMP ON/OFF	YIAN KUANG	22Φ 1a1b B	400V 6A
PBG	FEED HIGH SPEED	YIAN KUANG	22Φ 2a B	400V 6A
L1	POWER	YIAN KUANG	22Φ 1a1b 110V W	400V 6A
PB1	SPINDLE JOG	YIAN KUANG	22Φ 1a1b R	400V 6A
CS2	SPINDLE JOG/CONT	YIAN KUANG	22Φ 1a1b B	400V 6A
PB10	STOP	YIAN KUANG	22Φ 2b R	400V 6A
VR	FEED VARIABLE SPEED	COSMOS	RV-24YN20S 10K	
KIC KDC	SPINDLE FWD/REV	TAIAN	CNL-18 110V	660V Ith=35A
FC	SPINDLE OVER LOAD	TAIAN	RHN-18 16~23A	AUX CONT 400V~MAX
KA	FEED POWER	TAIAN	CN-11 110V	660V Ith=25A
FA	FEED OVER LOAD	TAIAN	RHN-18 4A	AUX CONT 400V~MAX
KB	COOLANT CONTACTOR	TAIAN	CN-11 110V	660V Ith=25A
FB	COOLANT OVER LOAD	TAIAN	RHN-18 1.2A	AUX CONT 400V~MAX
KE	LUBRICATE CONTACTOR	TAIAN	CN-11 110V	660V Ith=25A
FE	LUBRICATE OVER LOAD	TAIAN	RHN-18 1.2A	AUX CONT 400V~MAX
TR	CONTROL TRANSFORMER	CHEN-TEN	250VA 0.220.380.415.440/ 0.100.110	
F1	MS.14	GOULD	MS.14 40A	690V AC 50A
F2	MS.14	GOULD	MS.14 40A	690V AC 50A
F3	MS.14	GOULD	MS.14 40A	690V AC 50A
F5	TRANSFORMER PRIMARY FUSE	ETI	10*38 4A	600V AC 30A
F6	TRANSFORMER SECONDARY FUSE	ETI	10*38 4A	600V AC 30A

ITEM DESIGNATION	DESCRIPTION & FUNCTION	MANUFACTURE	TYPE	TECHNIACL DATA
Q1	POWER ON/OFF	TELEMECAN IQUE	VB1	660V Ith=32A
R7.R8	AUXILIARY RELAY	OMRON	MY-2N 110V	250V AC 5A
T5	FEED STOP TIME	ANLY	AH3-NA 110V 1S~10M	250V AC 5A
T3	SPINDLE JOG TIME	ANLY	AH3-NA 110V 1S~10M	250V AC 5A
LS10	TABLE LEFT STOP	OMRON	D4C-1202	250V 15A
LS11	TABLE RIGHT STOP	OMRON	D4C-1202	250V 15A
LS12	TABLE UP	OMRON	D4C-1202	250V 15A
LS13	TABLE DOWN	OMRON	D4C-1202	250V 15A
LS14	ADVANCER STOP	OMRON	D4C-1202	250V 15A
LS15	RETRACT STOP	OMRON	D4C-1202	250V 15A
KICR	AUXILIARY RELAY	OMRON	MY-4N 110V	250V AC 5A
KDCR	AUXILIARY RELAY	OMRON	MY-4N 110V	250V AC 5A
KIAR	AUXILIARY RELAY	OMRON	MY-4N 110V	250V AC 5A
KDAR	AUXILIARY RELAY	OMRON	MY-4N 110V	250V AC 5A
INVERTER	FEED INVERTER	MATSUSHITA	VF-7F	

860430BE/4P-5

MODEL 2500U+BRAKE

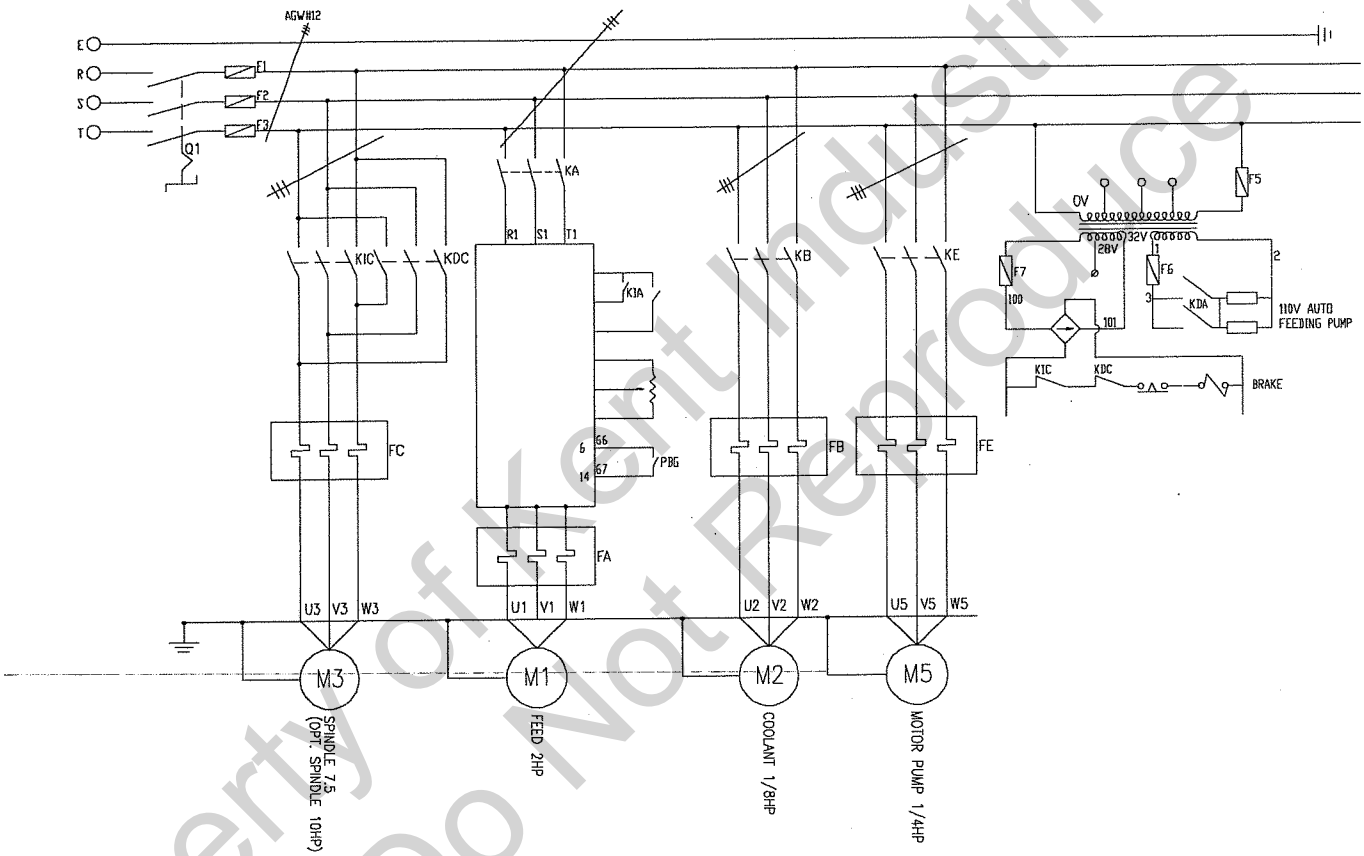

860420AA/4P-1

2500U+BRAKE

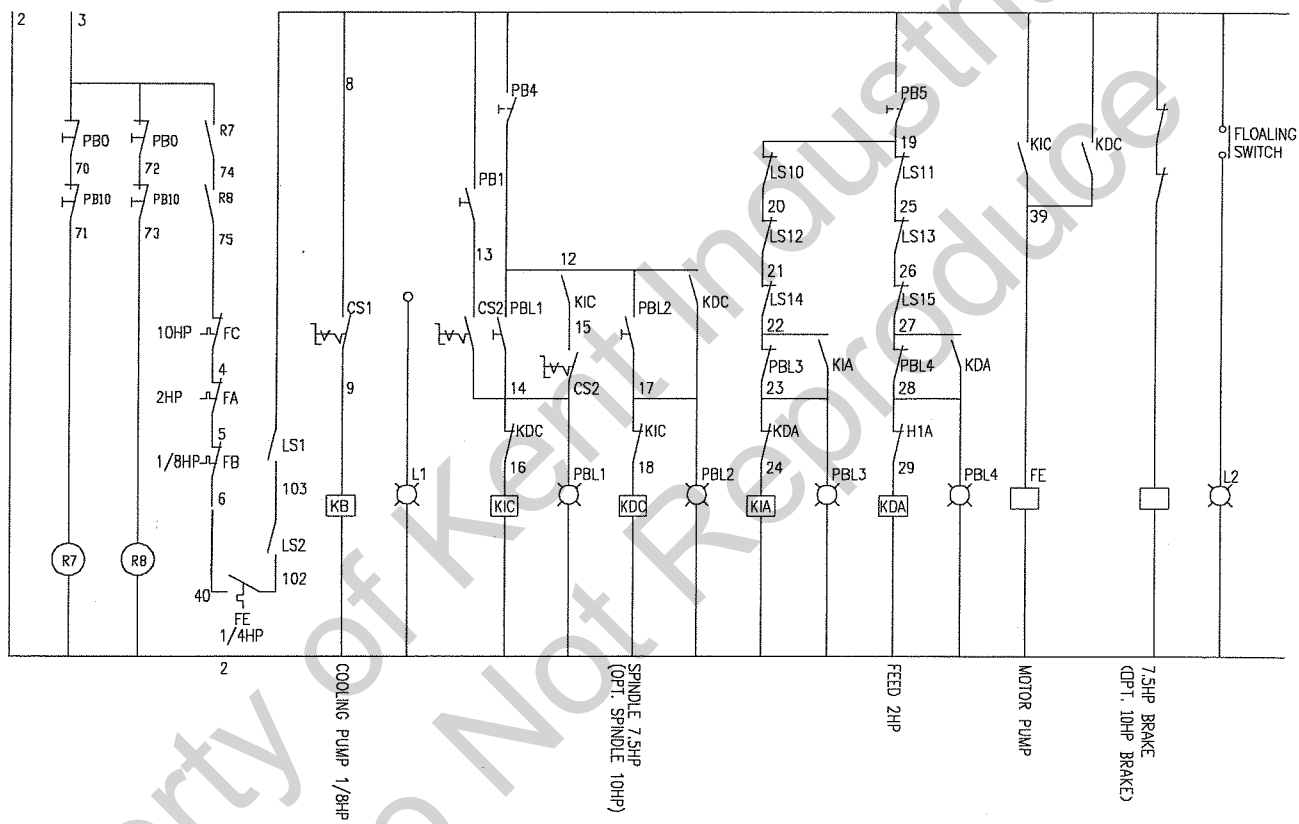

860420AB/4P-2

2500U+BRAKE

ELECTRIC PARTS LIST

SYMBOL	SPECIFICATION	DESCRIPTION	AMOUNT	BRAND
PBL1	22 p.1a1b.110V	7.5HP FORWARD (opt.)10HP	1	ALLEN_BRADLEY
PB4	22 p.110V	7.5HP STOP (opt.)10HP	1	ALLEN_BRADLEY
PBL2	22 p.1a1b.110V	7.5HP REVERSE (opt.)10HP	1	ALLEN_BRADLEY
PBL3	22 p.1a1b.110V	2HP FORWARD	1	ALLEN_BRADLEY
PB5	22 p.110V	2HP STOP	1	ALLEN_BRADLEY
PBL4	22 p.1a1b.110V	2HP REVERSE	1	ALLEN_BRADLEY
PB0	22 p.2a.RESET 800EP-MK4	EMERGENOY STOP	1	ALLEN_BRADLEY
CS1	22 p.1a1b	COOLANT ON/OFF	1	ALLEN_BRADLEY
L1	30 p.110V	SOURCE	1	ALLEN_BRADLEY
PB1	30 p.1a1b	7.5HP JOG (opt.)10HP	1	ALLEN_BRADLEY
CS2	30 p.1a1b	7.5HP JOG/AUTO (opt.)10HP	1	ALLEN_BRADLEY
TR	500VA 50HZ 0.380.415.440/0.100.110.0.28.32	TRANS FORMER	1	ALLEN_BRADLEY
F1 F3	14*51 40A MS14	SORCE PROTECT	3	GEC_ALSTHOM
F5.6.7	14*38 4A FMC101	CONTROL WIRE PROTECT	3	GEC_ALSTHOM
Q1	TK 3*63A	SOURCE SWITCH	1	TECHNO-EKECTRIC
KIC/KDC	HKOCL-18L 110V.26A	7.5HP FORWARD/ REVERSE (opt.)10HP	1	TAIAN
KB	HKO-11 110V.1.2A	COOLANT PUMP	1	TAIAN
LS10	D4C-1202	TABLE LEFT STOP	1	OMRON
LS11	D4C-1202	TABLE RIGHT STOP	1	OMRON

LS12	D4C-1202	UP STOP	1	OMRON
LS13	D4C-1202	DOWN STOP	1	OMRON
LS1	Z-15G22B	DOOR STOP	1	OMRON
LS2	Z-15G22B	DOOR STOP	1	OMRON
T1	AH3-1 110V 10S	7.5HP BRAKE (opt.)10HP	1	ANLY
PRG	22 p 1a	TABLE HIGH SPEED	1	ALLEN_BRADLEY
LS14	D4C-1202	ADVANCER STOP	1	OMRON
LS15	D4C-1202	RETACTER STOP	1	OMRON
INVERTER	V6-6E	TABLE SPEED	1	NATIONAL
R1	MY-4N 110V	AUXILIARY RELAY	1	OMORN
R2	MY-4N 110V	AUXILIARY RELAY	1	OMORN
R3	MY-4N 110V	AUXILIARY RELAY	1	OMORN
R4	MY-4N 110V	AUXILIARY RELAY	1	OMORN
R5	MY-4N 110V	AUXILIARY RELAY	1	OMORN
R6	MY-4N 110V	AUXILIARY RELAY	1	OMORN
PB10	30 p.2b.RESET	EMERGENCY STOP	1	ALLEN_BARDLEY
T	AH3-1 110V 10SEE	BARKE	1	ANLY
R7	MY-2N 110V	EMERGENCY STOP	1	OMORN
R8	MY-2N 110V	EMERGENCY STOP	1	OMORN

860420AC/4P-3

2500U +BRAKE

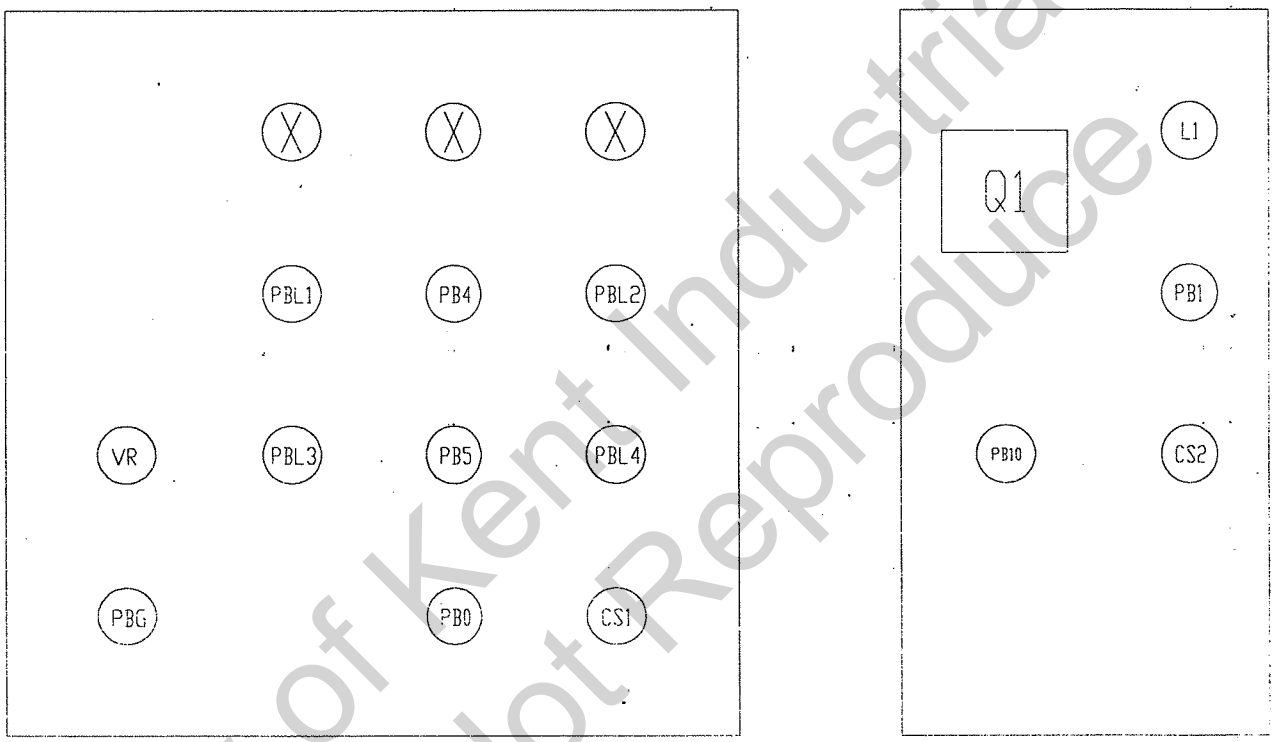

860420AD/4P-4

2500UM

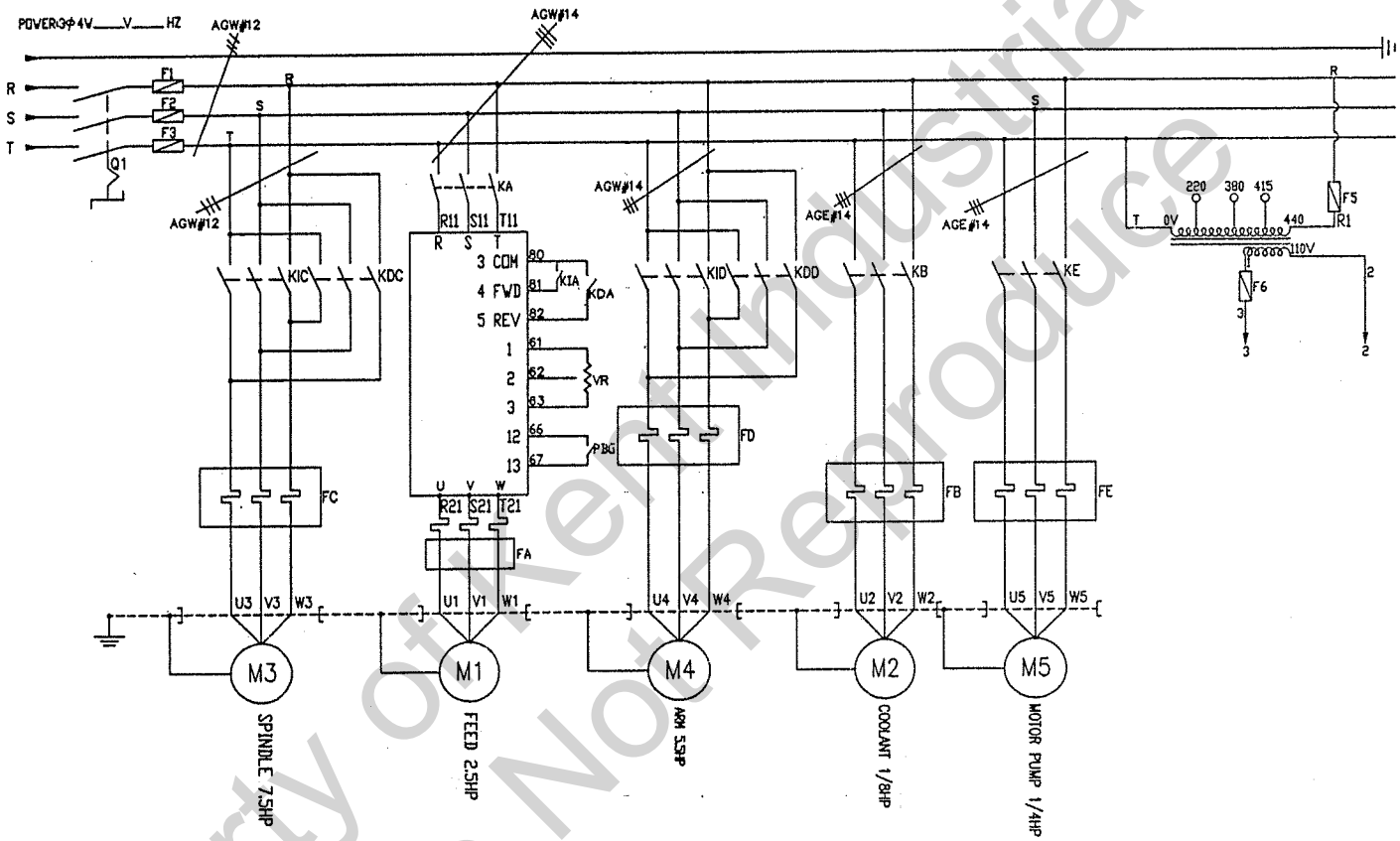

860430AA/4P-1

2500UM

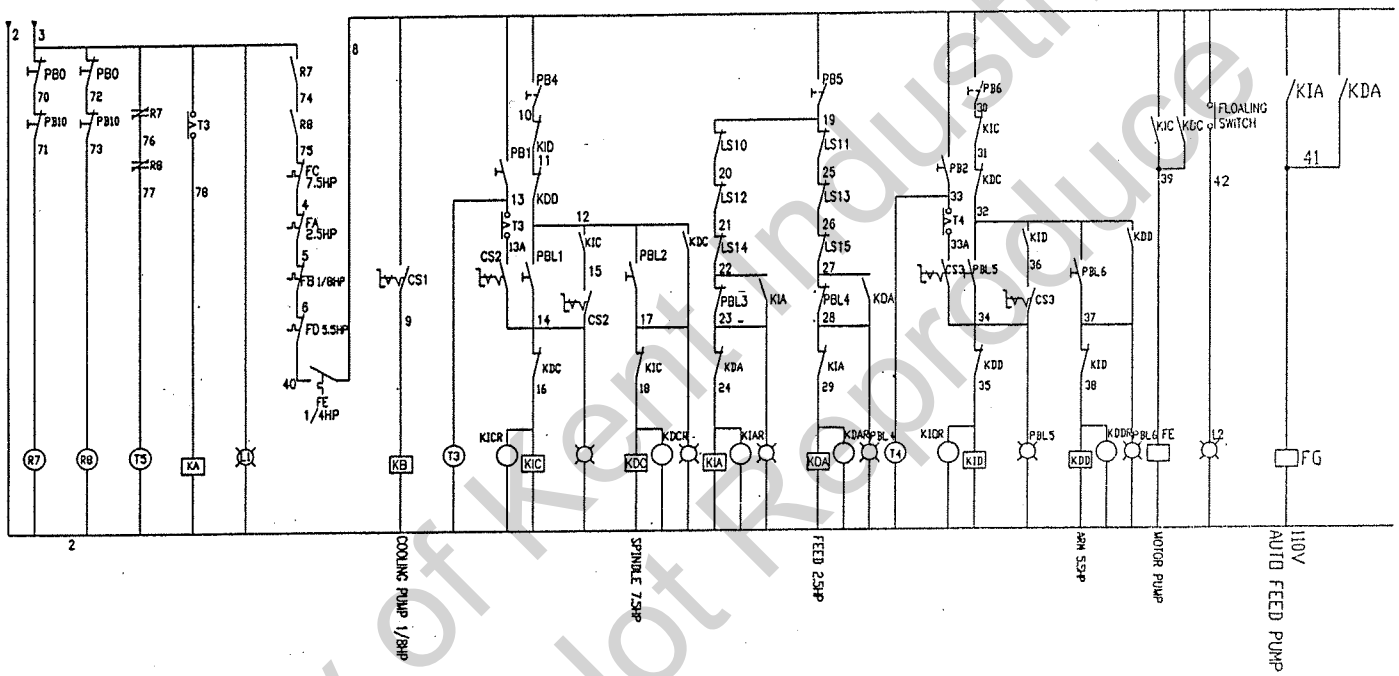

860430AB/4P-2

2500UM

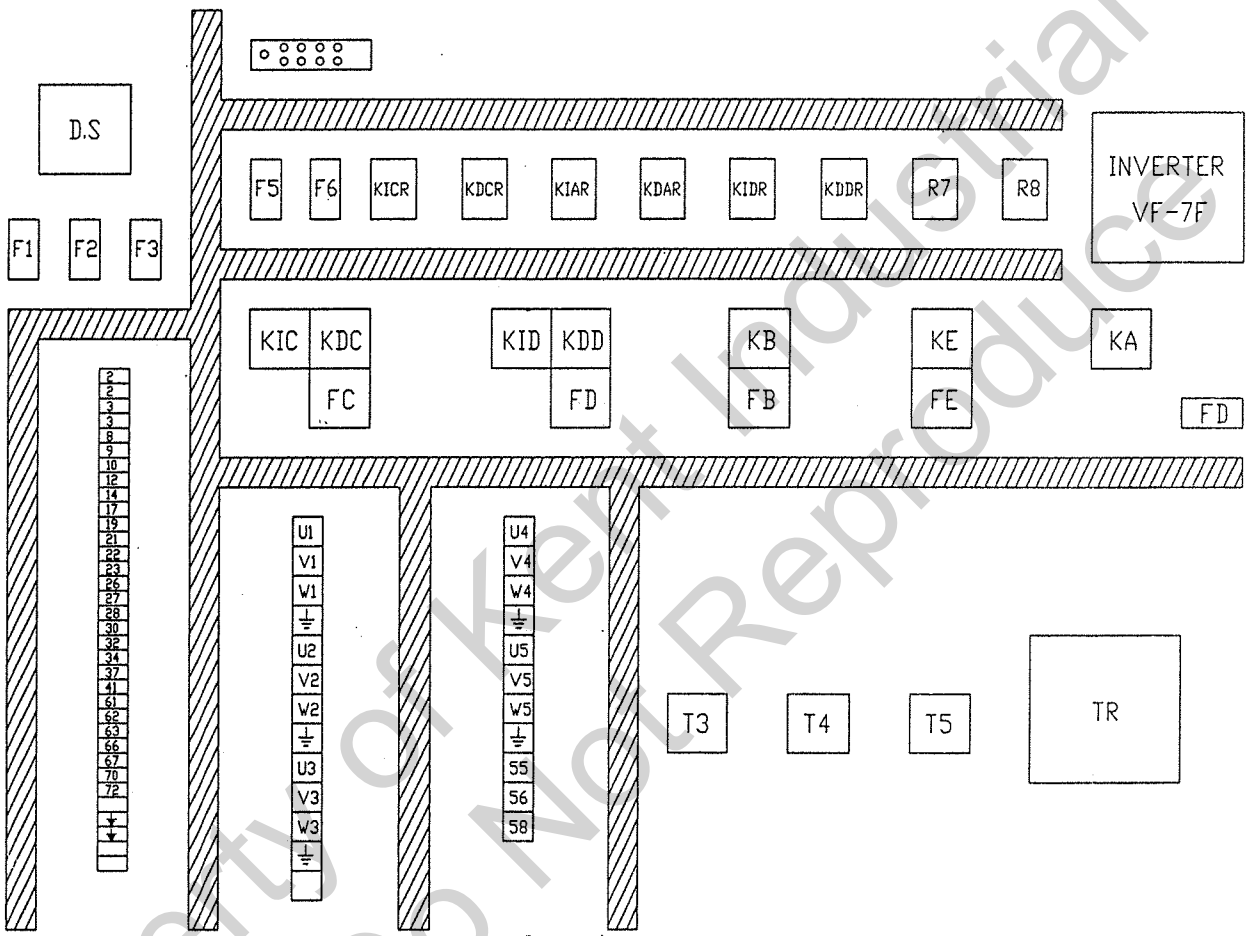

860430AC/4P-3

2500UM

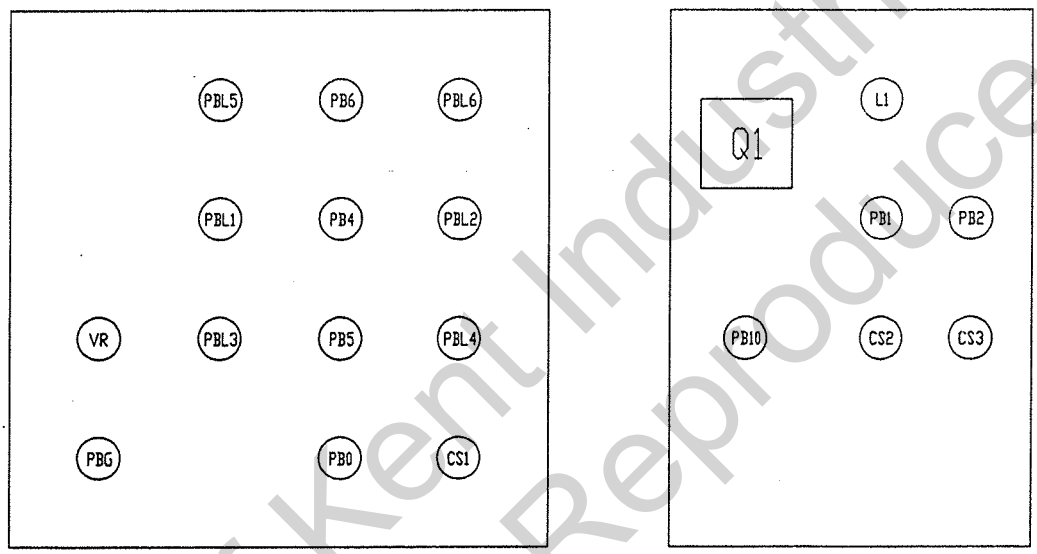

860430AD/4P-4

2500UM
ELECTRIC PARTS LIST

ITEM DESIGNATION	DESCRIPTION & FUNCTION	MANUFACTURE	TYPE	TECHNIACL DATA
PBL5	ARB FORWARD	YIAN KUANG	22φ 1a1b 110V W	400V 6A
PB6	ARM STOP	YIAN KUANG	22φ 1a1b R	400V 6A
PBL6	ARM REVERSE	YIAN KUANG	22φ 1a1b 110V W	400V 6A
PBL1	FEED FORWARD	YIAN KUANG	22φ 1a1b 110V W	400V 6A
PB4	FEED STOP	YIAN KUANG	22φ 1a1b R	400V 6A
PBL2	FEED REVERSE	YIAN KUANG	22φ 1a1b 110V W	400V 6A
PBL3	SPINDLE FORWARD	YIAN KUANG	22φ 1a1b 110V W	400V 6A
PB5	SPINDLE STOP	YIAN KUANG	22φ 1a1b R	400V 6A
PBL4	SPINDLE REVERSE	YIAN KUANG	22φ 1a1b 110V W	400V 6A
PB0	EMERGENCY STOP	YIAN KUANG	22φ 1a1b R	400V 6A
CS1	COOLING PUMP ON/OFF	YIAN KUANG	22φ 1a1b B	400V 6A
PBG	FEED HIGH SPEED	YIAN KUANG	22φ 2a B	400V 6A
L1	POWER	YIAN KUANG	22φ 1a1b 110V W	400V 6A
PB1	SPINDLE JOG	YIAN KUANG	22φ 1a1b R	400V 6A
CS2	SPINDLE JOG/CONT	YIAN KUANG	22φ 1a1b B	400V 6A
CS3	ARM JOG/CONT	YIAN KUANG	22φ 1a1b B	400V 6A
PB10	STOP	YIAN KUANG	22φ 2b R	400V 6A
VR	FEED VARIABLE SPEED	COSMOS	RV-24YN20S 10K	
KIC KDC	SPINDLE FWD/REV	TAIAN	CNL-18 110V	660V Ith=35A
FC	SPINDLE OVER LOAD	TAIAN	RHN-18 16~23A	AUX CONT 400V~MAX
KA	FEED POWER	TAIAN	CN-11 110V	660V Ith=25A
FA	FEED OVER LOAD	TAIAN	RHN-18 4A	AUX CONT 400V~MAX
KID KDD	ARM FWD/REV	TAIAN	CNL-18 110V	660V Ith=35A
FD	ARM OVER LOAD	TAIAN	RHN-18 8.5~12.5A	AUX CONT 400V~MAX
KB	COOLANT CONTACTOR	TAIAN	CN-11 110V	660V Ith=25A
FB	COOLANT OVER LOAD	TAIAN	RHN-18 1.2A	AUX CONT 400V~MAX
KE	LUBRICATE CONTACTOR	TAIAN	CN-11 110V	660V Ith=25A
FE	LUBRICATE OVER LOAD	TAIAN	RHN-18 1.2A	AUX CONT 400V~MAX

ITEM DESIGNATION	DESCRIPTION & FUNCTION	MANUFACTURE	TYPE	TECHNIACL DATA
TR	CONTROL TRANSFORMER	CHEN-TEN	250VA 0.220.380.415.440/ 0.100.110	
F1	MS.14	GOULD	MS.14 40A	690V AC 50A
F2	MS.14	GOULD	MS.14 40A	690V AC 50A
F3	MS.14	GOULD	MS.14 40A	690V AC 50A
F5	TRANSFORMER PRIMARY FUSE	ETI	10×38 4A	600V AC 30A
F6	TRANSFORMER SECONDARY FUSE	ETI	10×38 4A	600V AC 30A
Q1	POWER ON/OFF	TELEMECAN IQUE	V8B1	660V Ith=32A
R7.R8	AUXILIARY RELAY	OMRON	MY-2N 110V	250V AC 5A
T5	FEED STOP TIME	ANLY	AH3-NA 110V 1S~10M	250V AC 5A
T3	SPINDLE JOG TIME	ANLY	AH3-NA 110V 1S~10M	250V AC 5A
T4	ARM JOG TIME	ANLY	AH3-NA 110V 1S~10M	250V AC 5A
LS10	TABLE LEFT STOP	OMRON	D4C-1202	250V 15A
LS11	TABLE RIGHT STOP	OMRON	D4C-1202	250V 15A
LS12	TABLE UP	OMRON	D4C-1202	250V 15A
LS13	TABLE DOWN	OMRON	D4C-1202	250V 15A
LS14	ADVANCER STOP	OMRON	D4C-1202	250V 15A
LS15	RETRACT STOP	OMRON	D4C-1202	250V 15A
KICR	AUXILIARY RELAY	OMRON	MY-4N 110V	250V AC 5A
KDCR	AUXILIARY RELAY	OMRON	MY-4N 110V	250V AC 5A
KIAR	AUXILIARY RELAY	OMRON	MY-4N 110V	250V AC 5A
KDAR	AUXILIARY RELAY	OMRON	MY-4N 110V	250V AC 5A
KIDR	AUXILIARY RELAY	OMRON	MY-4N 110V	250V AC 5A
KDDR	AUXILIARY RELAY	OMRON	MY-4N 110V	250V AC 5A
INVERTER	FEED INVERTER	MATSUSHITA	VF-7F	

860430AE/4P-5

2500UM+BRAKE

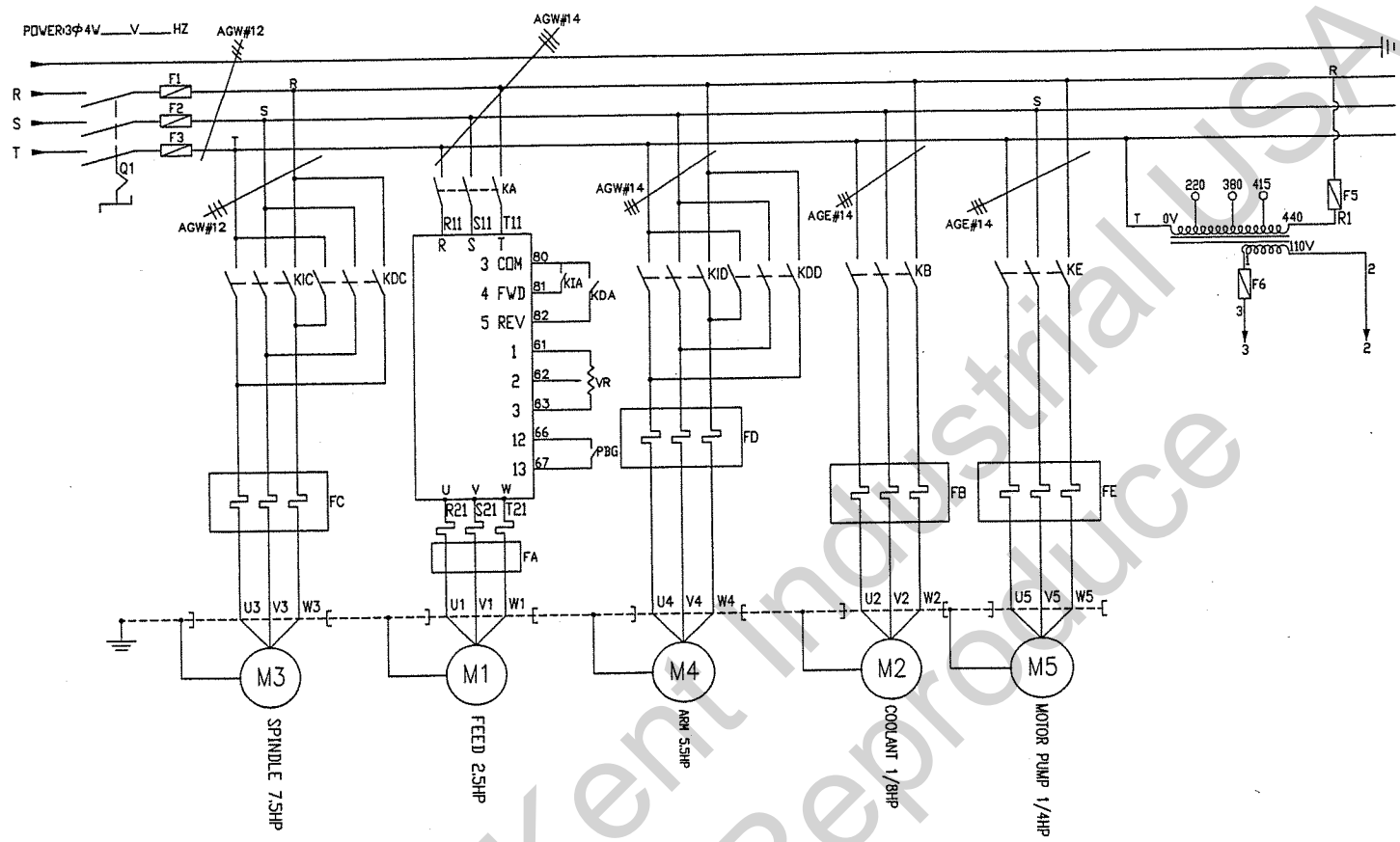

860424AA/4P-1

2500UM+BRAKE

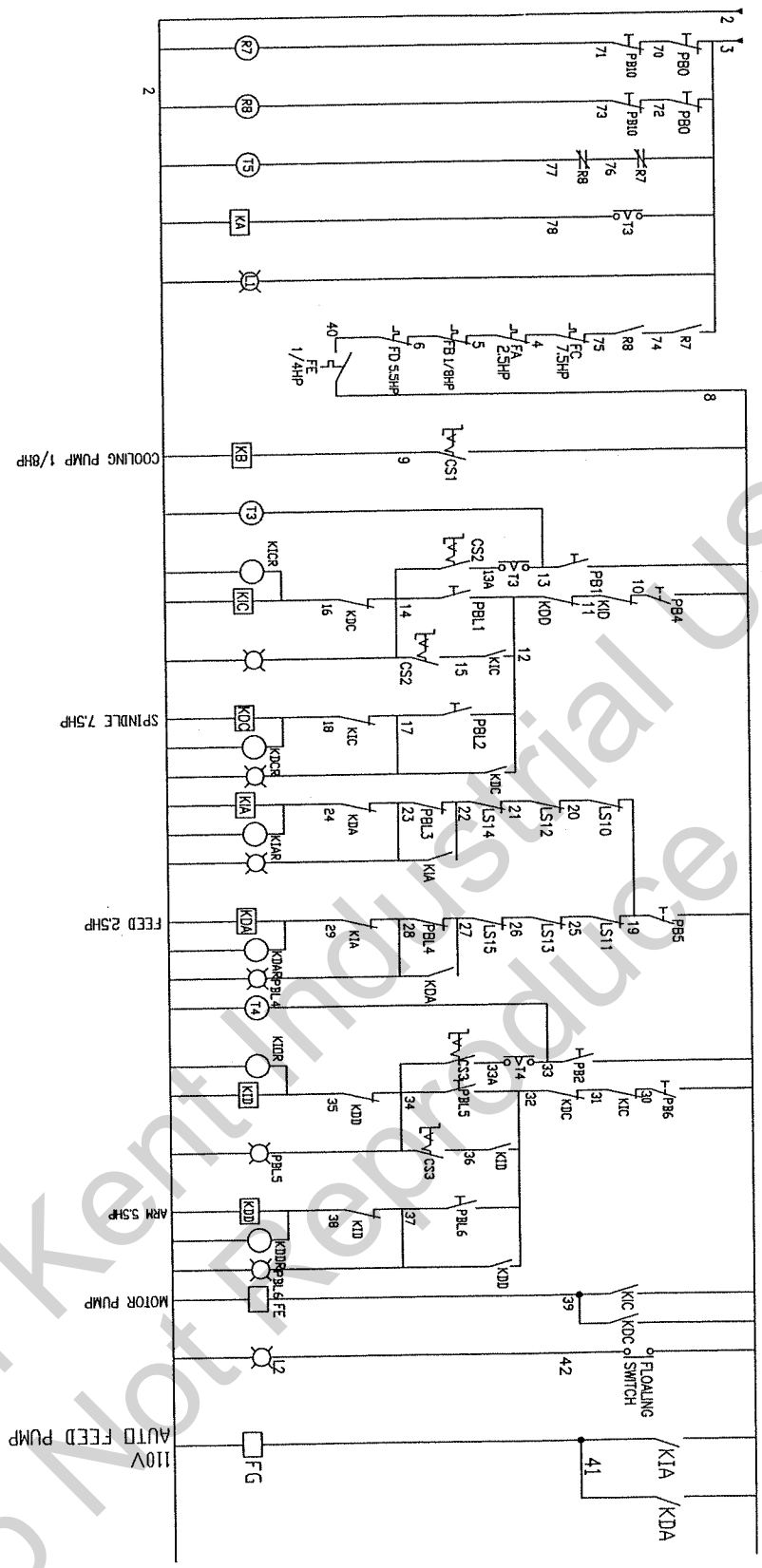

860424AB/4P-2

2500UM+BRAKE
ELECTRIC PARTS LIST

ITEM DESIGNATION	DESCRIPTION & FUNCTION	MANUFACTURE	TYPE	TECHNIACL DATA
PBL5	ARM FORWARD	TELEMECANIQUE	22φ 1a 110V W	400V 6A
PB6	ARM STOP	TELEMECANIQUE	22φ 1b R	400V 6A
PBL6	ARM REVERSE	TELEMECANIQUE	22φ 1a 110V W	400V 6A
PBL3	FEED FORWARD	TELEMECANIQUE	22φ 1a 110V W	400V 6A
PB5	FEED STOP	TELEMECANIQUE	22φ 1b R	400V 6A
PBL4	FEED REVERSE	TELEMECANIQUE	22φ 1a 110V W	400V 6A
PBL1	SPINDLE FORWARD	TELEMECANIQUE	22φ 1a 110V W	400V 6A
PB4	SPINDLE STOP	TELEMECANIQUE	22φ 1b R	400V 6A
PBL2	SPINDLE REVERSE	TELEMECANIQUE	22φ 1a 110V W	400V 6A
PB0	EMERGENCY STOP	TELEMECANIQUE	22φ 2b R RESET	400V 6A
CS1	COOLANT PUMP ON/OFF	TELEMECANIQUE	22φ 1a1b B	400V 6A
PBG	FEED HIGH SPEED	TELEMECANIQUE	22φ 2a B	400V 6A
L1	POWER LAMP	TELEMECANIQUE	22φ 110V W	400V 6A
PB1	SPINDLE JOG	TELEMECANIQUE	22φ 1a B	400V 6A
CS2	SPINDLE JOG/CONT	TELEMECANIQUE	22φ 1a B	400V 6A
CS3	ARM JOG/CONT.	TELEMECANIQUE	22φ 1a1b B	400V 6A
PB10	STOP	TELEMECANIQUE	22φ 2b R	400V 6A
PB2	ARM JOG	TELEMECANIQUE	22φ 1a B	400V 6A
VR	FEED VARIABLE SPEED	COSMOS	RV-24YN20S 10KΩ	
KIC KDC	SPINDLE FWD/REV	TAIAN	CNL-18 110V	660V Ith=35A
FC	SPINDLE OVER LOAD	TAIAN	RHN-10K 16~23A	AUX CONT 400V~MAX
KA	FEED POWER	TAIAN	CN-11 110V	660V Ith=25A
FA	FEED OVER LOAD	TAIAN	RHN-10K 4A	AUX CONT 400V~MAX
KID KDD	ARM FWD/REV	TAIAN	CNL-18 110V	660V Ith=35A
FD	ARM OVER LOAD	TAIAN	RHN-10K 8.5~12.5A	AUX CONT 400V~MAX
KB	COOLANT CONTACTOR	TAIAN	CN-11 110V	660V Ith=25A
FB	COOLANT OVER LOAD	TAIAN	RHN-10K 1.2A	AUX CONT 400V~MAX
KE	LUBRICANT CONTACTOR	TAIAN	CN-11 110V	660V Ith=25A
FE	LUBRICANT OVER LOAD	TAIAN	RHN-10K 1.2A	AUX CONT 400V~MAX

ITEM DESIGNATION	DESCRIPTION & FUNCTION	MANUFACTURE	TYPE	TECHNIACL DATA
TR	CONTROL TRANSFORMER	CHEN-TEN	300VA 0.220.380.415.440/ 0.100.110	
F1	MS.14	GOULD	MS.14 40A	690V AC 50A
F2	MS.14	GOULD	MS.14 40A	690V AC 50A
F3	MS.14	GOULD	MS.14 40A	690V AC 50A
F5	TRANSFORMER PRIMARY FUSE	ETI	10×38 4A	600V AC 30A
F6	TRANSFORMER SECONDARY FUSE	ETI	10×38 4A	600V AC 30A
Q1	POWER ON/OFF	TELEMECAN IQUE	VB3 63A	660V Ith=32A
R7,R8	AUXILIARY RELAY	OMRON	MY-2N 110V	250V AC 5A
T5	FEED STOP TIME	ANLY	AH3-NA 110V 1S~10M	250V AC 5A
T3	SPINDLE JOG TIME	ANLY	AH3-NA 110V 1S~10M	250V AC 5A
T4	ARM JOG TIME	ANLY	AH3-NA 110V 1S~10M	250V AC 5A
LS10	TABLE LEFT STOP	OMRON	D4C-1202	250V 15A
LS11	TABLE RIGHT STOP	OMRON	D4C-1202	250V 15A
LS12	TABLE UP	OMRON	D4C-1202	250V 15A
LS13	TABLE DOWN	OMRON	D4C-1202	250V 15A
LS14	ADVANCE STOP	OMRON	D4C-1202	250V 15A
LS15	RETRACT STOP	OMRON	D4C-1202	250V 15A
KICR	AUXILIARY RELAY	OMRON	MY-4N 110V	250V AC 5A
KDCR	AUXILIARY RELAY	OMRON	MY-4N 110V	250V AC 5A
KIAR	AUXILIARY RELAY	OMRON	MY-4N 110V	250V AC 5A
KDAR	AUXILIARY RELAY	OMRON	MY-4N 110V	250V AC 5A
KIDR	AUXILIARY RELAY	OMRON	MY-4N 110V	250V AC 5A
KDDR	AUXILIARY RELAY	OMRON	MY-4N 110V	250V AC 5A
INVERTER	FEED INVERTER	MATSUSHITA	VF-7F	

860424AC/4P-3

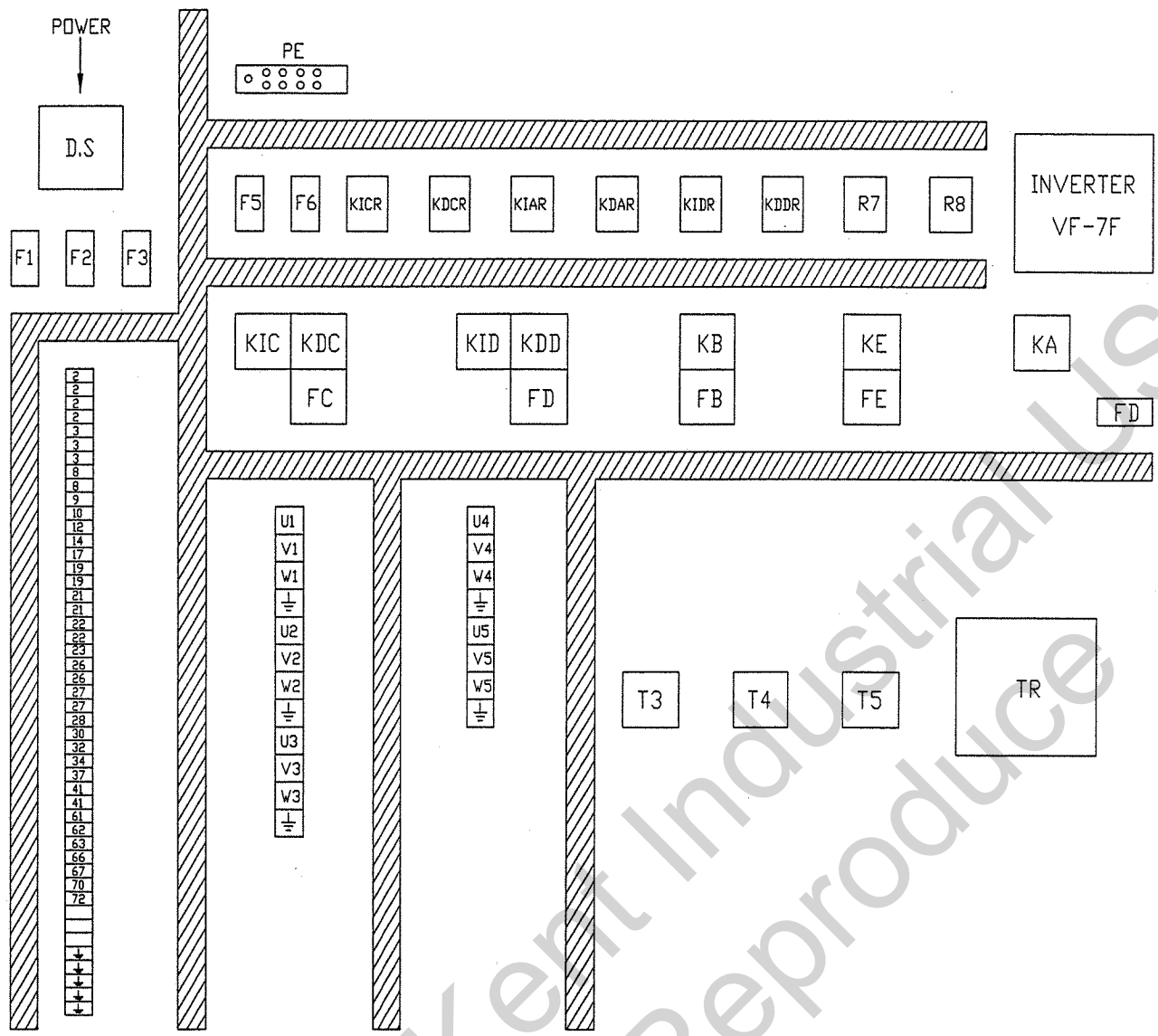

2500UM+BRAKE

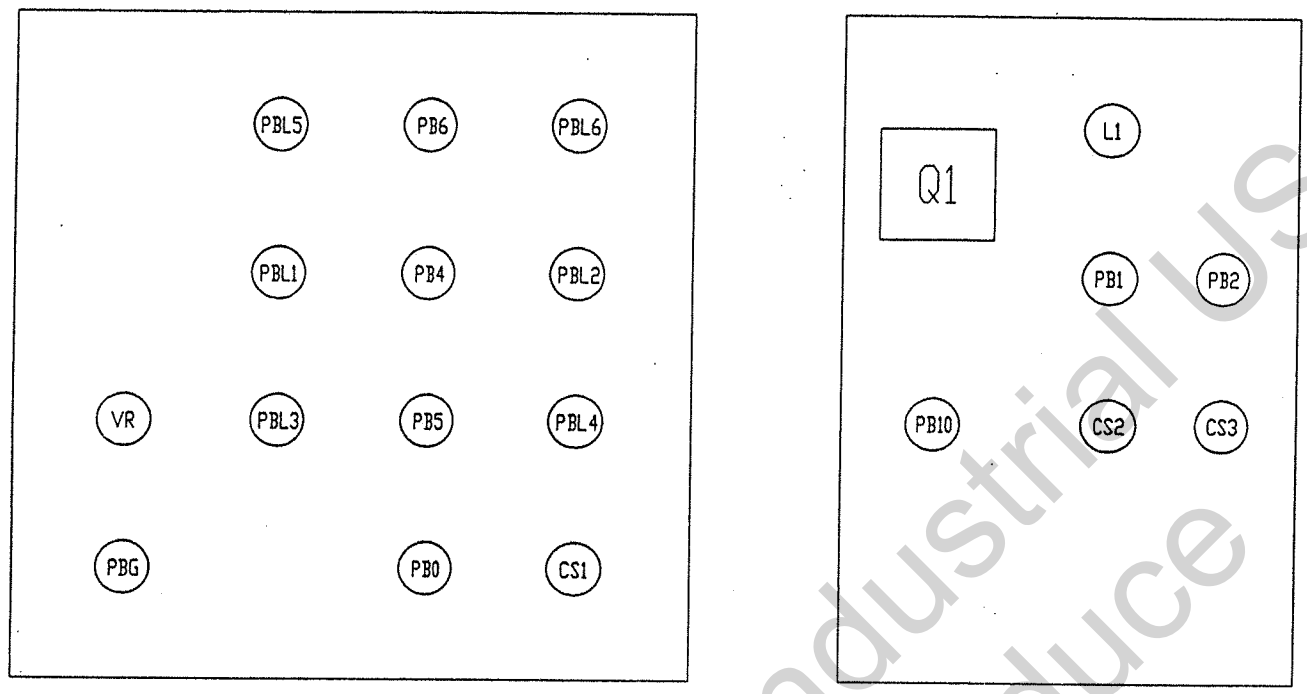

860424AD/4P-4

2500QM

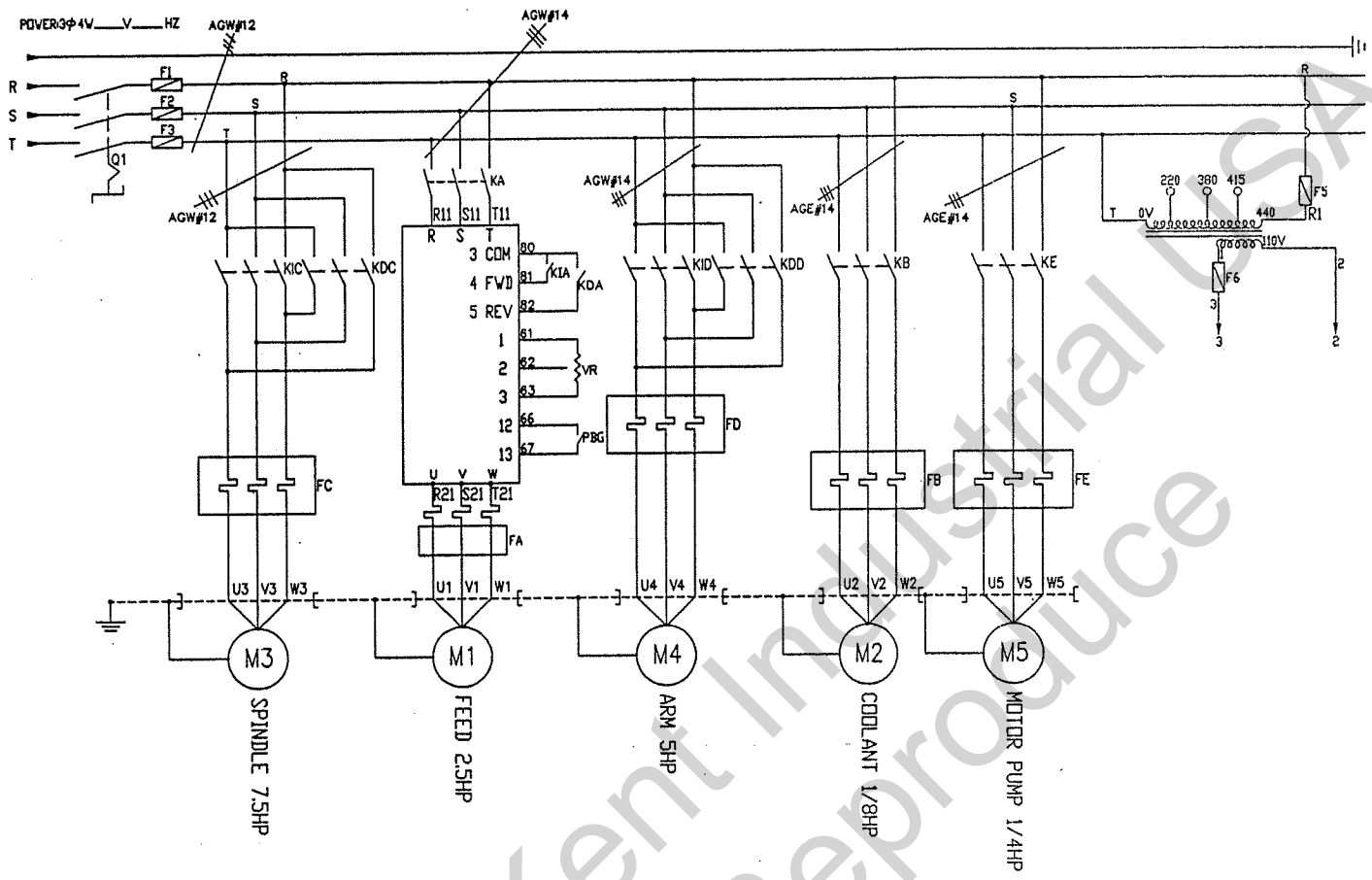

860724AA/4P-1

2500QM

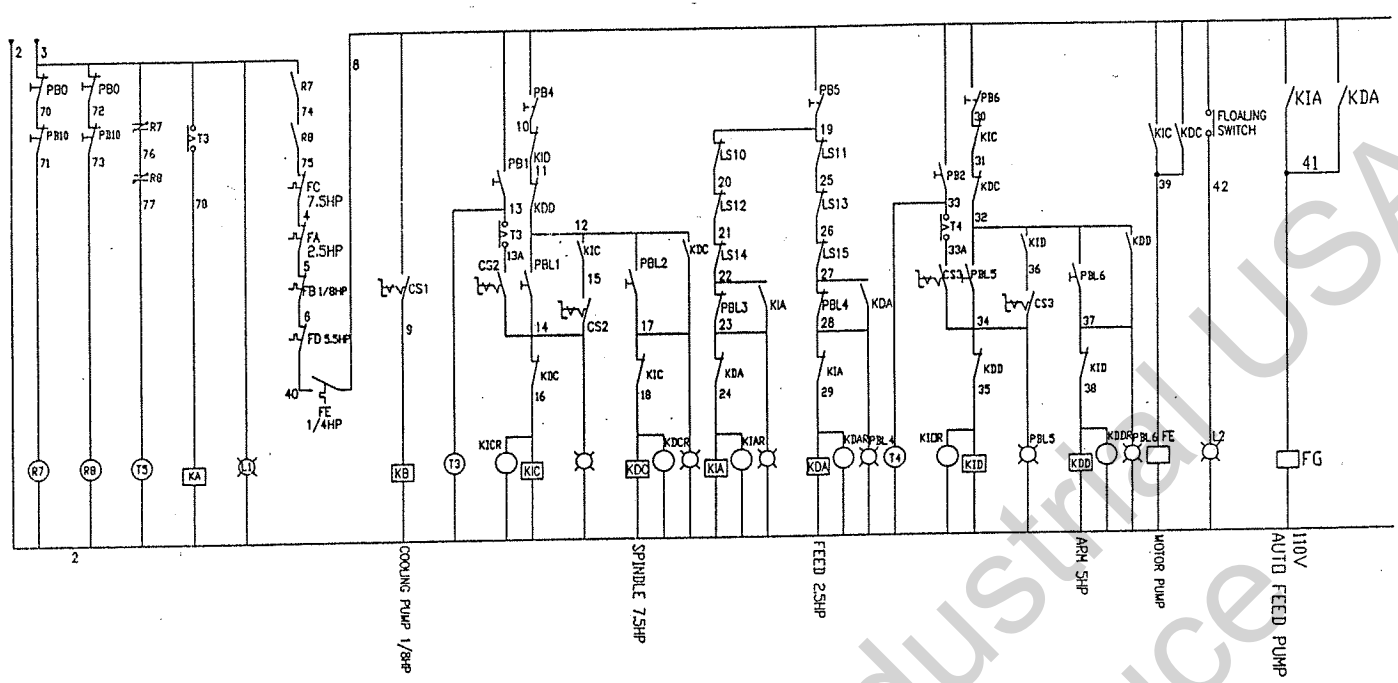

860724AB/4P-2

2500QM

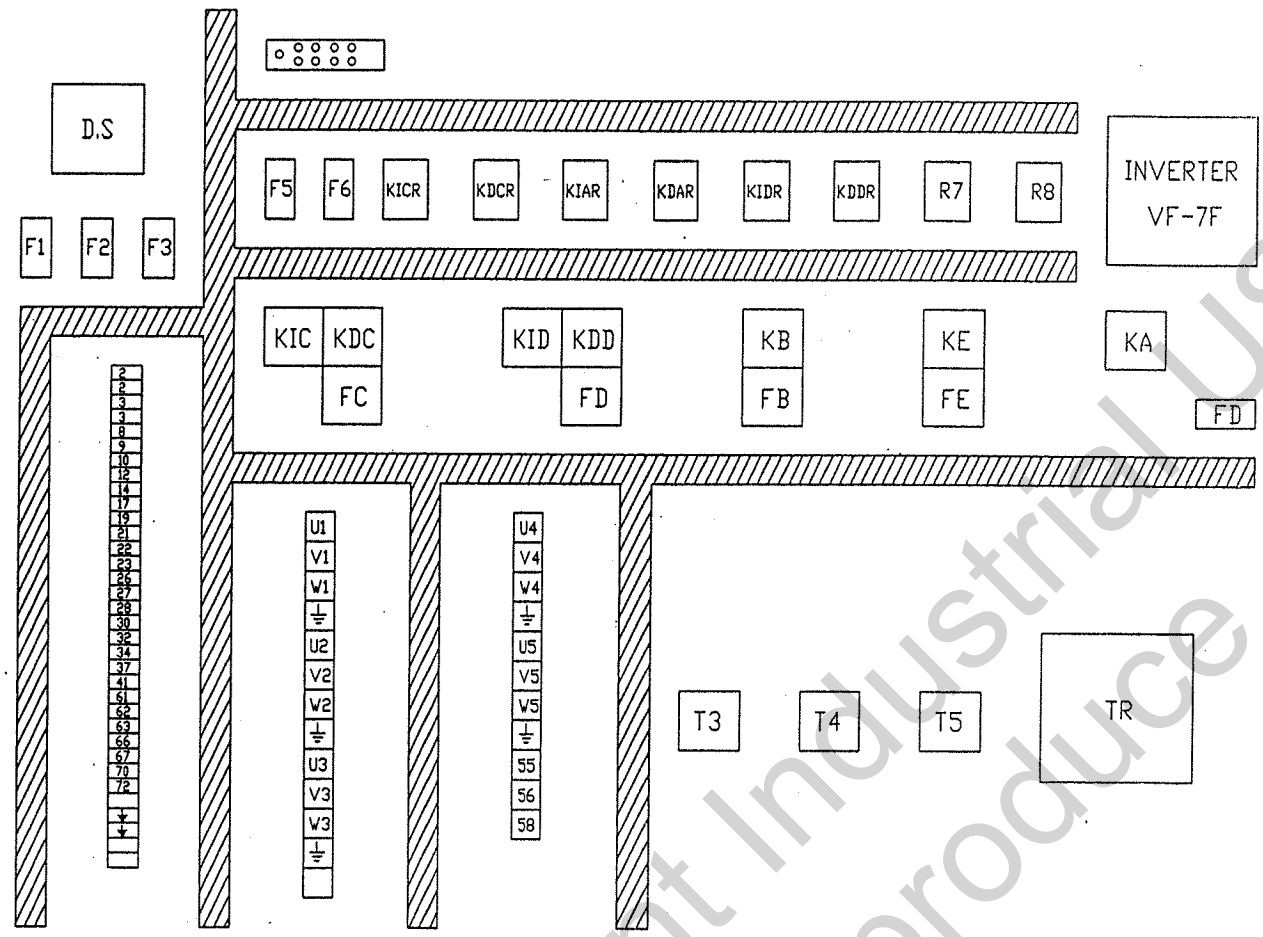

860724AC/4P-3

2500QM

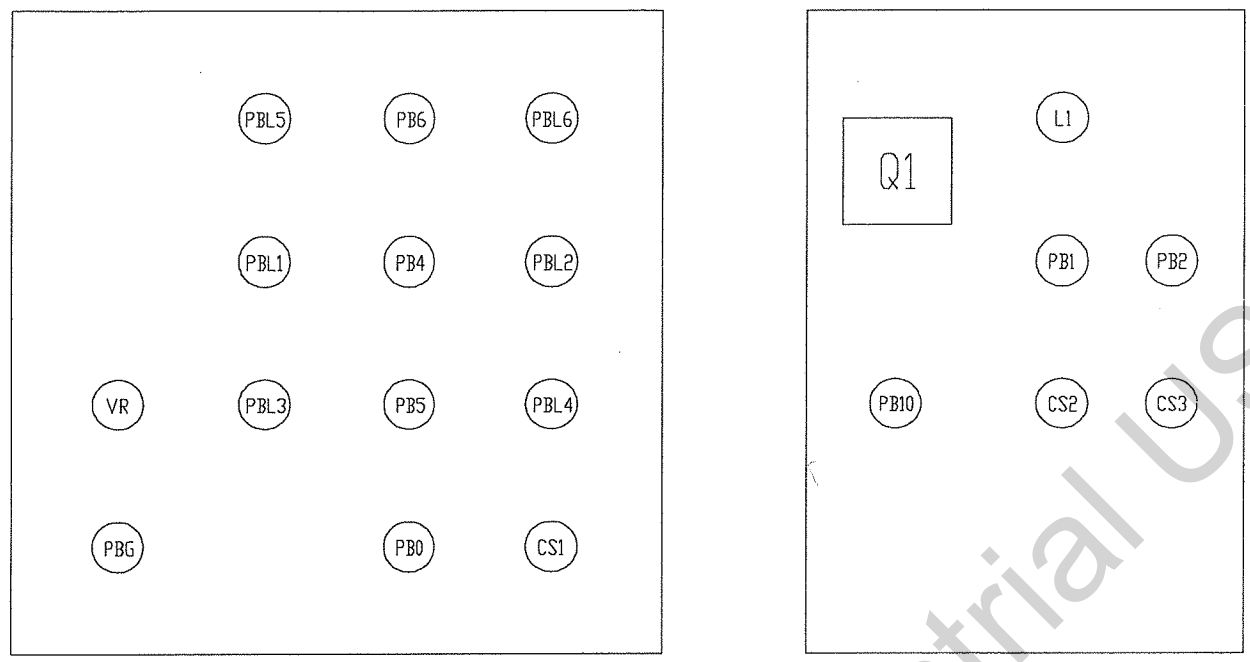

860724AD/4P-4

REMARK:

The electric circut of the MODEL 2500 M as MODEL 2500UM
The electric circuit of the MODEL 2500M+BRAKEas MODEL 2500UM+BRAKE

MODEL 2500QM
ELECTRIC PARTS LIST

ITEM DESIGNATION	DESCRIPTION & FUNCTION	MANUFACTURE	TYPE	TECHNIACL DATA
PBL5	ARB FORWARD	YIAN KUANG	22φ 1a1b 110V W	400V 6A
PB6	ARM STOP	YIAN KUANG	22φ 1a1b R	400V 6A
PBL6	ARM REVERSE	YIAN KUANG	22φ 1a1b 110V W	400V 6A
PBL1	FEED FORWARD	YIAN KUANG	22φ 1a1b 110V W	400V 6A
PB4	FEED STOP	YIAN KUANG	22φ 1a1b R	400V 6A
PBL2	FEED REVERSE	YIAN KUANG	22φ 1a1b 110V W	400V 6A
PBL3	SPINDLE FORWARD	YIAN KUANG	22φ 1a1b 110V W	400V 6A
PB5	SPINDLE STOP	YIAN KUANG	22φ 1a1b R	400V 6A
PBL4	SPINDLE REVERSE	YIAN KUANG	22φ 1a1b 110V W	400V 6A
PB0	EMERGENCY STOP	YIAN KUANG	22φ 1a1b R	400V 6A
CS1	COOLING PUMP ON/OFF	YIAN KUANG	22φ 1a1b B	400V 6A
PBG	FEED HIGH SPEED	YIAN KUANG	22φ 2a B	400V 6A
L1	POWER	YIAN KUANG	22φ 1a1b 110V W	400V 6A
PB1	SPINDLE JOG	YIAN KUANG	22φ 1a1b R	400V 6A
CS2	SPINDLE JOG/CONT	YIAN KUANG	22φ 1a1b B	400V 6A
CS3	ARM JOG/CONT	YIAN KUANG	22φ 1a1b B	400V 6A
PB10	STOP	YIAN KUANG	22φ 2b R	400V 6A
VR	FEED VARIABLE SPEED	COSMOS	RV-24YN20S 10K	
KIC KDC	SPINDLE FWD/REV	TAIAN	CNL-18 110V	660V Ith=35A
FC	SPINDLE OVER LOAD	TAIAN	RHN-18 16~23A	AUX CONT 400V~MAX
KA	FEED POWER	TAIAN	CN-11 110V	660V Ith=25A
FA	FEED OVER LOAD	TAIAN	RHN-18 4A	AUX CONT 400V~MAX
KID KDD	ARM FWD/REV	TAIAN	CNL-18 110V	660V Ith=35A
FD	ARM OVER LOAD	TAIAN	RHN-18 8.5~12.5A	AUX CONT 400V~MAX
KB	COOLANT CONTACTOR	TAIAN	CN-11 110V	660V Ith=25A
FB	COOLANT OVER LOAD	TAIAN	RHN-18 1.2A	AUX CONT 400V~MAX
KE	LUBRICATE CONTACTOR	TAIAN	CN-11 110V	660V Ith=25A
FE	LUBRICATE OVER LOAD	TAIAN	RHN-18 1.2A	AUX CONT 400V~MAX

ITEM DESIGNATION	DESCRIPTION & FUNCTION	MANUFACTURE	TYPE	TECHNIACL DATA
TR	CONTROL TRANSFORMER	CHEN-TEN	250VA 0.220.380.415.440/ 0.100.110	
F1	MS.14	GOULD	MS.14 40A	690V AC 50A
F2	MS.14	GOULD	MS.14 40A	690V AC 50A
F3	MS.14	GOULD	MS.14 40A	690V AC 50A
F5	TRANSFORMER PRIMARY FUSE	ETI	10×38 4A	600V AC 30A
F6	TRANSFORMER SECONDARY FUSE	ETI	10×38 4A	600V AC 30A
Q1	POWER ON/OFF	TELEMECAN IQUE	VB1	660V Ith=32A
R7.R8	AUXILIARY RELAY	OMRON	MY-2N 110V	250V AC 5A
T5	FEED STOP TIME	ANLY	AH3-NA 110V 1S~10M	250V AC 5A
T3	SPINDLE JOG TIME	ANLY	AH3-NA 110V 1S~10M	250V AC 5A
T4	ARM JOG TIME	ANLY	AH3-NA 110V 1S~10M	250V AC 5A
LS10	TABLE LEFT STOP	OMRON	D4C-1202	250V 15A
LS11	TABLE RIGHT STOP	OMRON	D4C-1202	250V 15A
LS12	TABLE UP	OMRON	D4C-1202	250V 15A
LS13	TABLE DOWN	OMRON	D4C-1202	250V 15A
LS14	ADVANCER STOP	OMRON	D4C-1202	250V 15A
LS15	RETRACT STOP	OMRON	D4C-1202	250V 15A
KICR	AUXILIARY RELAY	OMRON	MY-4N 110V	250V AC 5A
KDCR	AUXILIARY RELAY	OMRON	MY-4N 110V	250V AC 5A
KIAR	AUXILIARY RELAY	OMRON	MY-4N 110V	250V AC 5A
KDAR	AUXILIARY RELAY	OMRON	MY-4N 110V	250V AC 5A
KIDR	AUXILIARY RELAY	OMRON	MY-4N 110V	250V AC 5A
KDDR	AUXILIARY RELAY	OMRON	MY-4N 110V	250V AC 5A
INVERTER	FEED INVERTER	MATSUSHITA	VF-7F	

860724AE/4P-5

6.2 PROTCTIVE CIRCUIT

Model 2500 series protctive circuit

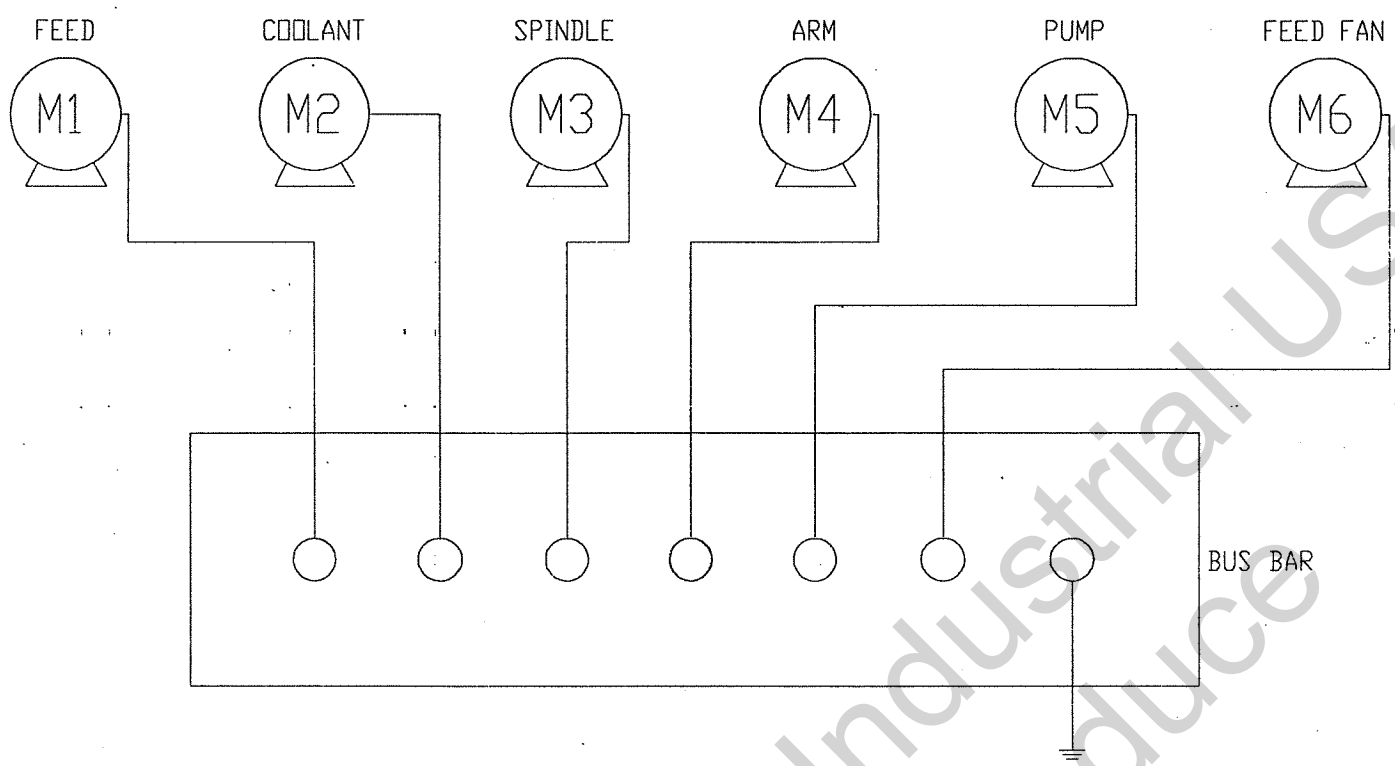

860420AE