KENT USA®
Since 1979

KUM-HU250
Universal Mill
Operation Manual

www.kentusa.com | 1.800.KENT.USA

KUM-HU250

VERTICAL & HORIZONTAL MILLING MACHINE

VERTICAL SPINLE

Nose taper	N. T. #40
Spindle to table	50mm ~ 435mm
Spindle to column	150mm ~ 450mm
Spindle speed 16-speed	215 ~ 3440r.p.m.
Quill travel	125mm
Overarm travel	300mm
Head tilting angle (R&L)	90°
Ram swivel	360°
Motor	G250-2HP, GS250-3HP GVS250-5HP

HORIZONTAL SPINDLE

Nose taper	N. T. #40
Spindle to table	0 ~ 370mm
Spindle to ram	115mm
Spindle speed 6-speed	60-1320r.p.m.
Motor	2HP

TABLE

Size	250mm × 1100mm
Longitudinal travel	700mm
Cross travel	250mm
Vertical travel	440mm
Auto longitudinal feed	22 ~ 384mm/min
Auto repid traverse	1250mm/min
Auto feed motor	3/4HP
COOLANT PUMP MOTOR	1/8HP
PACKING CRATE	57" × 45" × 75"
NET WELGHT (approx.)	1200KG

DIMENSION DRAWING

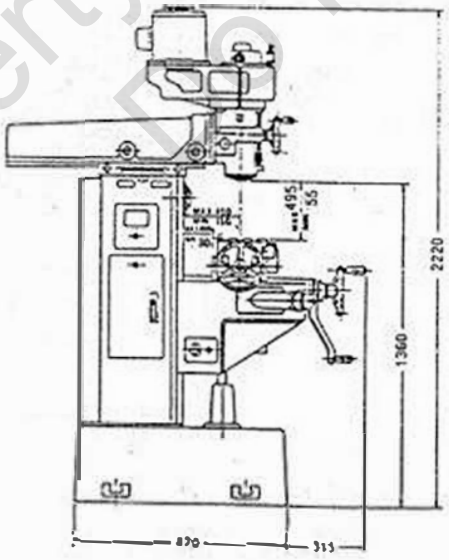

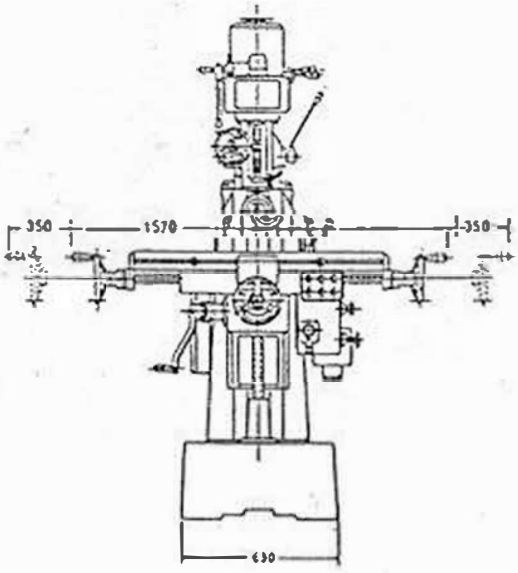

HU250 HORIZONTAL MILLING MACHINE

with vertical milling attachment (optional)

SPECIFICATIONS

TABLE

Size	250mm × 1100mm
Longitudinal travel	700mm
Cross travel	250mm
Vertical travel	440mm
Auto longitudinal feed	22～384mm/min
Auto rapid traverse	1250mm/min
Auto feed motor	3/4HP

HORIZONTAL SPINDLE

Nose taper	N.T.#40
Spinde to table	0～420mm
Spindle to overarm	100mm
Spindle speed 6-speed	60～1320r.p.m.
Motor	2HP
COOLANT PUMP MOTOR	1/8HP
PACKING CRATE	57″ ×45″ ×75″
NET WELGHT (approx.)	1000KG

VERTICAL MILLING ATTACHMENT

Nose taper	N.T.#40

DIMENSION DRAWING

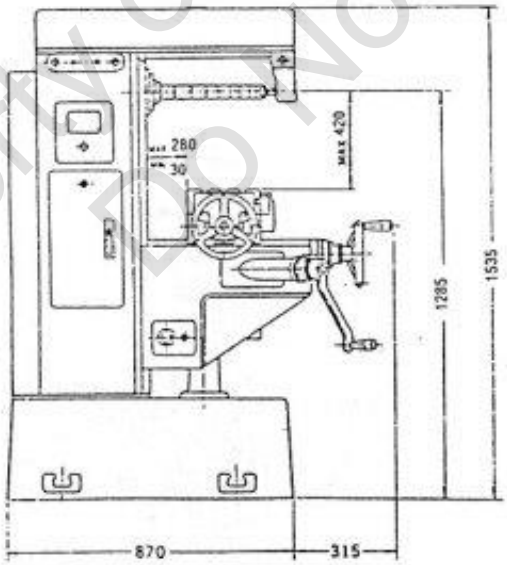

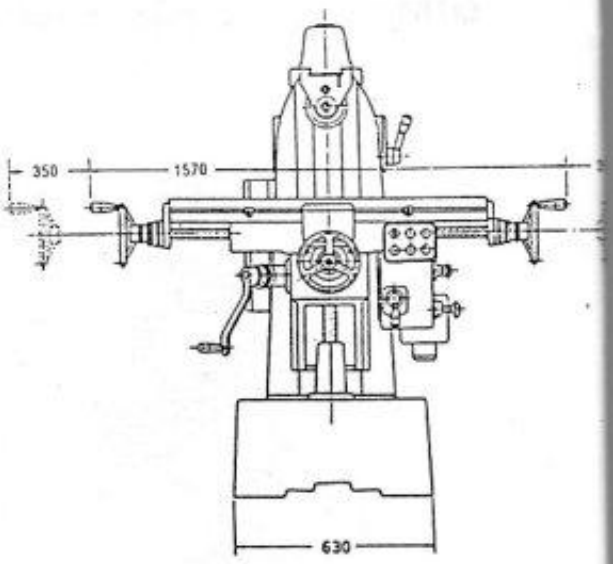

HU250 UNIVERSAL MILLING MACHINE

SPECIFICATION:

HORIZONTAL SPINDLE	MM
Range of spindle speed (6 speeds)(R.P.M)	60 ⁄s (108~1470) 50 ⁄s (90~1225)
Taper of spindle bore	NT (ISO)#40
Spindle center to table	0~320mm
Spindle center to over arm bottom	120mm
TABLE	
Working surface of table	240mmX1055mm
Longitudinal travel	560mm
Transver travel	260mm
Vertical travel	420mm
Range of longitudinal feed speed(mm/min)	60⁄s(21~246) 50⁄s(17~203)6Steps
Range of longitudinal rapid speed(mm/min)	60⁄s (2056) 50 ⁄s (1713)
Table will swivel (R & L)	90°
Motor	
Horizontal milling (Vertical milling head)	3HP
Table longitudinal feed	1HP
Coolant pump	1/8HP
Net weight(approx)	1100KG
Gross weight	1250KG
Dimensions of parking case(LxWxH)	1365X1180X1740mm

DIMENSION DRAWING:

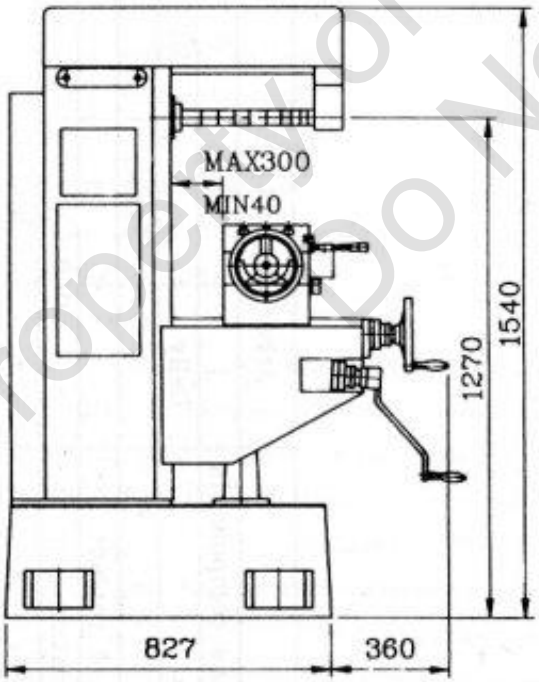

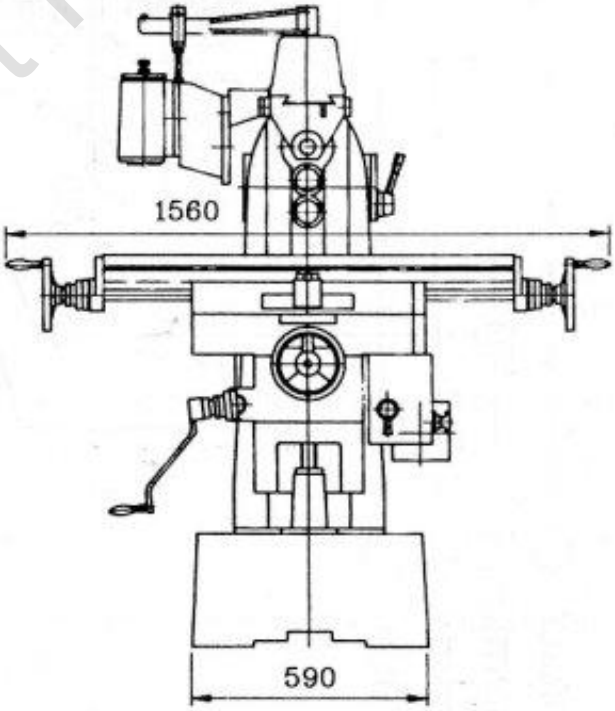

S:1/20 UH1A017A

LUBRICATION INSTRUCTIONS

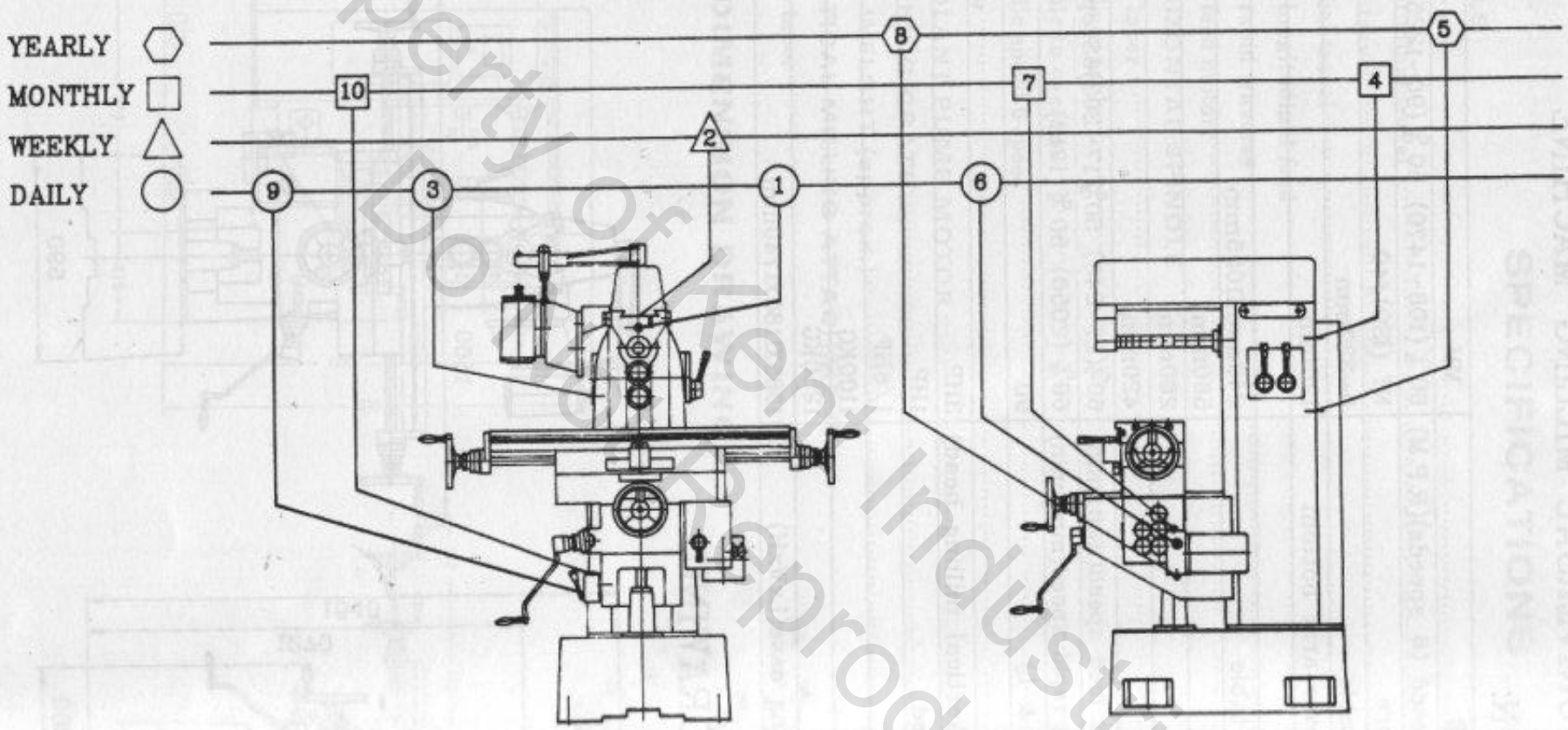

	Arbor support		Horizontal spindle			Table feed gears			Slide ways	
Machine components	1	2	3	4	5	6	7	8	9	10
Check	Daily		Daily			Daily			Daily	
Fill		Weekly		Monthly			Monthly			Monthly
Clean & replace					Yearly			Yearly		
Lubrication	G68		CB68			CB68			G68	
Capacity		0.4L		4L			4L			2L
Remarks									2500P292	S:1/18

FEATURES

1. This very modern machine combines the convenience of vertical milling machines and sturdiness of horizontal milling machines into a vertical and horizontal combination milling machine. It is very practical for technical schools and production shops. It adapts to vertical milling, horizontal milling, angular milling, drilling, boring, die sinking, etc. because of its simple operation and setting.
2. The vertical spindle which is lubricated from top to bottom by gravity and supported by high speed precision tapered roller bearings can perform high speed cutting operations. The maximum spindle speed is 3,440 R.P.M.
3. The vertical head tilting angle adjustment, controlled by a worm, is very simple and accurate.
4. The bearings of the vertical spindle are equipped with a special device which can be adjusted outside the quill according to high or low speed, if desired.
5. The transverse movement of the overarm is adjusted easily by a rack and pinion mechanism.
6. The overarm, designed with a box section, can perform heavy duty cutting. It can be swivelled 360 degrees on the graduated swivel base on the column and located at any position.
7. The column which is made of high tensile cast iron of FC25 or above is very rigid and no deformation occurs. Accuracy will remain for a long time.
8. The horizontal spindle, made of special alloy steel and processed through heat treatment and precise grinding, is supported by high speed precision tapered roller bearings of FAG or SKF. It can be used for high speed heavy duty cutting.
9. All gears are made of SNCM21 nickel chrome molybdenum alloy steel and heat-treated after precise machining. So, they are rigid and durable. The gear box has an oil bath in which gears run silently and well lubricated.
10. The surface of the table has been ground precisely.
11. The feed nuts of the table for longitudinal and cross movement have backlash adjustment devices to maintain precise accuracy.
12. Forced oil feed devices maintain lubrication of sliding surfaces.
13. The magnetic switch (as a safety device) disconnets when cutting load exceeds the designed capacity. The motor also stops automatically to prevent tool and work from damage.
14. A complete set of electric switches is furnished with the machine. These switches control the operation of the machine and maintain safety.
15. An auxiliary lamp is furnished for work illumination.
16. The direction change of the left-and-right direction of the automatic table feed uses electrical micro switches. It is easy to operate.
17. The sensitive micro switches are used as the stop blocks of the auto longitudinal feed of the table. They are accurate and durable.
18. The vertical spindle is equipped with a brake.

INSTRUCTIONS

1. Please remove the wooden packing case carefully and contact us or our distributors if the machine has been damaged in transit.
2. Each machine has been inspected and tested in operation carefully before delivery. Please write us if any imperfections are found. We are looking forward to your comments.
3. Refer to the following assembly drawings and parts list. They can help you understand easily the method of the operation.

A. SETTING OF THE MACHINE

Choose a rigid, smooth, and level concrete foundation to set the machine. (FIG. 1 Detail of the concrete base)

B. LEVELLING THE MACHINE

To ensure good work conditions and produce products of excellent quality and high accuracy you must use a good level. For testing whether the machine is levelled well or not, the level must be placed on the center of the table in front-and-back and in-and-out directions. (FIG. 2)

C. LUBRICATION

Clean the machine with a suitable solvent. Lubricate all slide surfaces with SAE #10 lubricant. Please lubricate completely all slide surfaces before starting the machine.

D. INSPECTION BEFORE OPERATION

Refer to attached inspection report and check the machine against our original testing records.

E. CONNECTION OF POWER SOURCE

A plug on the bottom of the electric box (located on the left of the column) should be connected to electric power source. Start the motor and run the machine after connection. Looking at each spindle, rotation should be counter clockwise. A power indicator on the upside of the electric box will illuminate when electricity is on.

F. SWITCH BOX

The switch box is on the right of the saddle. Please refer to FIG. 3 to understand the method of the operation.

G. OPERATIONS OF THE VERTICAL HEAD

1. Speed change of vertical spindle

   Loosen the clamps on the both sides of the motor first then pull the motor towards the spindle pulley. Shift the belt to a proper speed groove and then fasten clamps.

2. Brake operation of the vertical spindle

   Pull the long handle on top right of the head forward and the spindle will stop at once. turn off the power source to the head before brake operation to prevent the motor from damage.

3. Adjustment of tilt angle

   Loosen the four nuts on the front of the vertical head and turn the hexagon head worm on the front left of the overarm with wrench. Adjust the tilt angle to the desired degree and tighten nuts.

4. Operations of the vertical feed

(1) Release the quill clamp lever on the right bottom of the head before engaging the vertical feed. Don't pull it down before the release of the quill to avoid damage.

(2) For a direct down feed, first turn the nut on the left of the head counter clockwise until the clutch has been disengaged.

Then use the long lever on the right of the head.

(3) For hand wheel feed, turn the nut clockwise till the clutch has been engaged. Turn the hand wheel clockwise to move quill down.

5. Adjustments of the vertical travel 1/16" per division.

(1) The depth scale is graduated

The graduated dial nut is used to show the working depth. Read the depth size from the scale and the dial nut so the machine can perform any depth precisely.

(2) The working depth is controlled by contact of the graduated dial nut and the quill stop block. The higher the dial nut is set the deeper the depth.

6. Lubrication

Don't start the machine if it is not lubricated properly. The lubrication of the head is by gravity.

A oil feed cup is on the upper left side of the head. Pull the quill down and release the screw M10 on the right side. Use an M8 L type hexagon spanner to adjust the tightness of bearings according to the high or low speed, if applicable.

H. ADJUSTMENT OF THE OVERARM

1. Release the four clamp nuts between the column and the swivel base of the overarm and remove the dowel pin which is on the top right. Swivel manually 360 degrees and locate in any position desired.
2. Loosen the two gib screws on the right of the swivel base and the two clamping block screws on the left, if in-and-out movements are desired. Turn the hexagon head gear shaft at the middle left of the overarm and the overarm will move in or out. Adjust to the desired position and then tighten the clamp screws.
3. If the horizontal spindle is to be used, the overarm has to be swivelled to a proper position with the vertical head at the back of the machine. Then insert the dowel pin. insert the cutter arbor and then set the arbor support to suitable position. Tighten the clamp nut.

I. SPEED CHANGE OF THE HORIZONTAL SPINDLE

1. Turn off the electric power. Move the handle (on the right upside of the column) to proper desired speed position. Jog or manually rotate spindle to facilitate shifting. Don't change speed during operation to prevent damage.
2. The magnetic switch will disengage if spindle is overloaded and the motor will stop automatically. After correcting the reason of the overload, put the magnetic switch in original position and continue work. If the reason of the overload is not corrected the motor cannot be started. This design provides the safety for the machine.
3. To change the V belts open the belt cover on the back of the column and the square

window cover on the right bottom. Loosen the adjusting nuts on the motor mount a little, using 19mm wrench and pull the motor upwards. Change the V belts and then clamp nuts.

J. AUTO, RAPID AND MANUAL FEEDS

1. Loosen the two clamping screws on the table before engaging the auto longitudinal feed. Pull down the long handle on the top right of the speed change box. Turn the switch on the top left of the switch box. Switch towards right for right direction feed and left for left direction feed.
2. Pull upwards the long handle on the top right of the speed change box for auto rapid traverse according to the direction indicated by the switch. Pull down for auto feed and set the handle in the middle position for manual feed by the handwheels of on the each end of the table. (FIG. 4)
3. The handwheel for cross movement is located in the middle of the knee. If handwheel turns one revolution, the table will feed .200inch. One graduation of the dial is .001inch.
4. The manual vertical feed crank is located on the left of the knee. If crank handle turns one revolution, the table will feed .100inch. One graduation of the dial is .001inch.
5. The longitudinal backlash adjusting nut for the table is located on the left of the saddle. If it desired to adjust the tightness of the leadscrew, use M6 hexagon wrench to loosen the screw a little and turn the nut clockwise. Tighten the screw after the backlash of the leadscrew has been eliminated.

K. CLAMPS OF THE AXES

1. Table clamp.
2. Saddle clamp.
3. Knee clamp.
4. Clamp of the swivel base of the overarm.
5. Overarm clamp.
6. Clamp of the arbor support.

So that these slides do not move during operation] they have to be clamped by tightening the clamp screws to ensure the working rigidity.

L. LUBRICATION SYSTEM

A plunger type oil pump is located at the lower left side of the knee. Pull it a few times every day for normal lubrication. It will force the lubricating oil through the pipes to all sliding surfaces.

FOUNDATRON DETAIL (MM)

FIG. 1

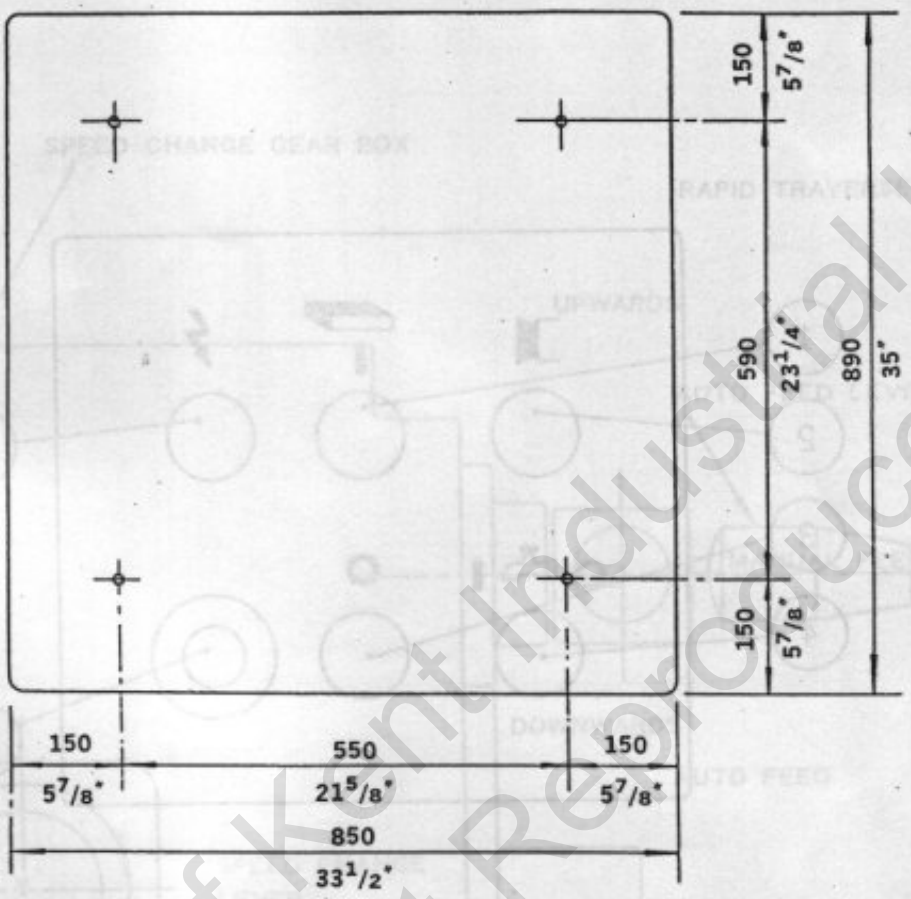

FIG. 2

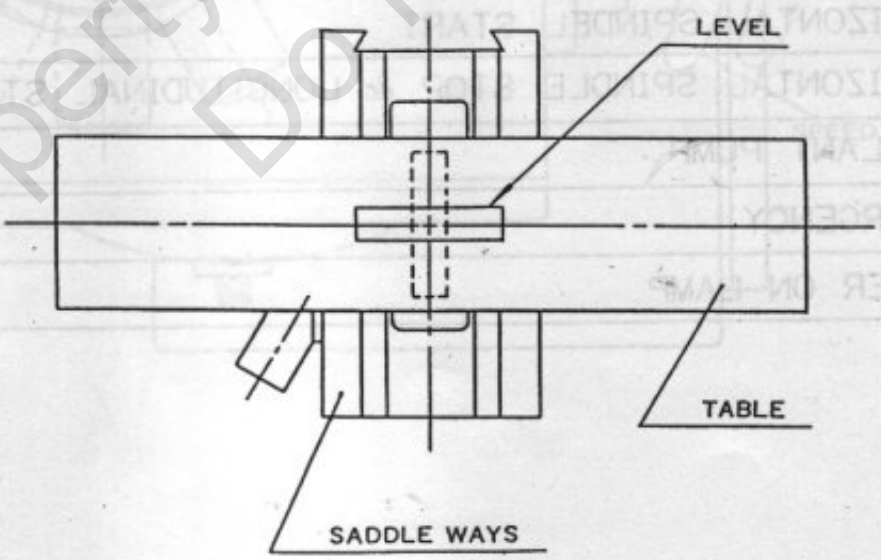

DESCRIPTION OF CONTROL PANEL (UH-1)

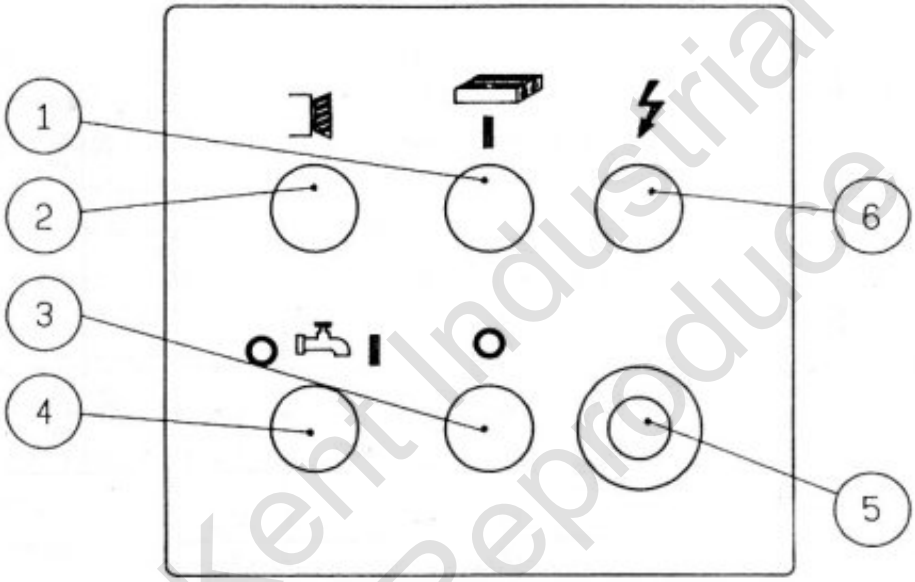

1: LONGITUDINAL FEED STANDBY
2: HORIZONTAL SPINDEL START
3: HORIZONTAL SPINDLE STOP & LONGITUDINAL STOP
4: COOLANT PUMP
5: EMERGENCY
6: POWER ON LAMP

FIG. 4

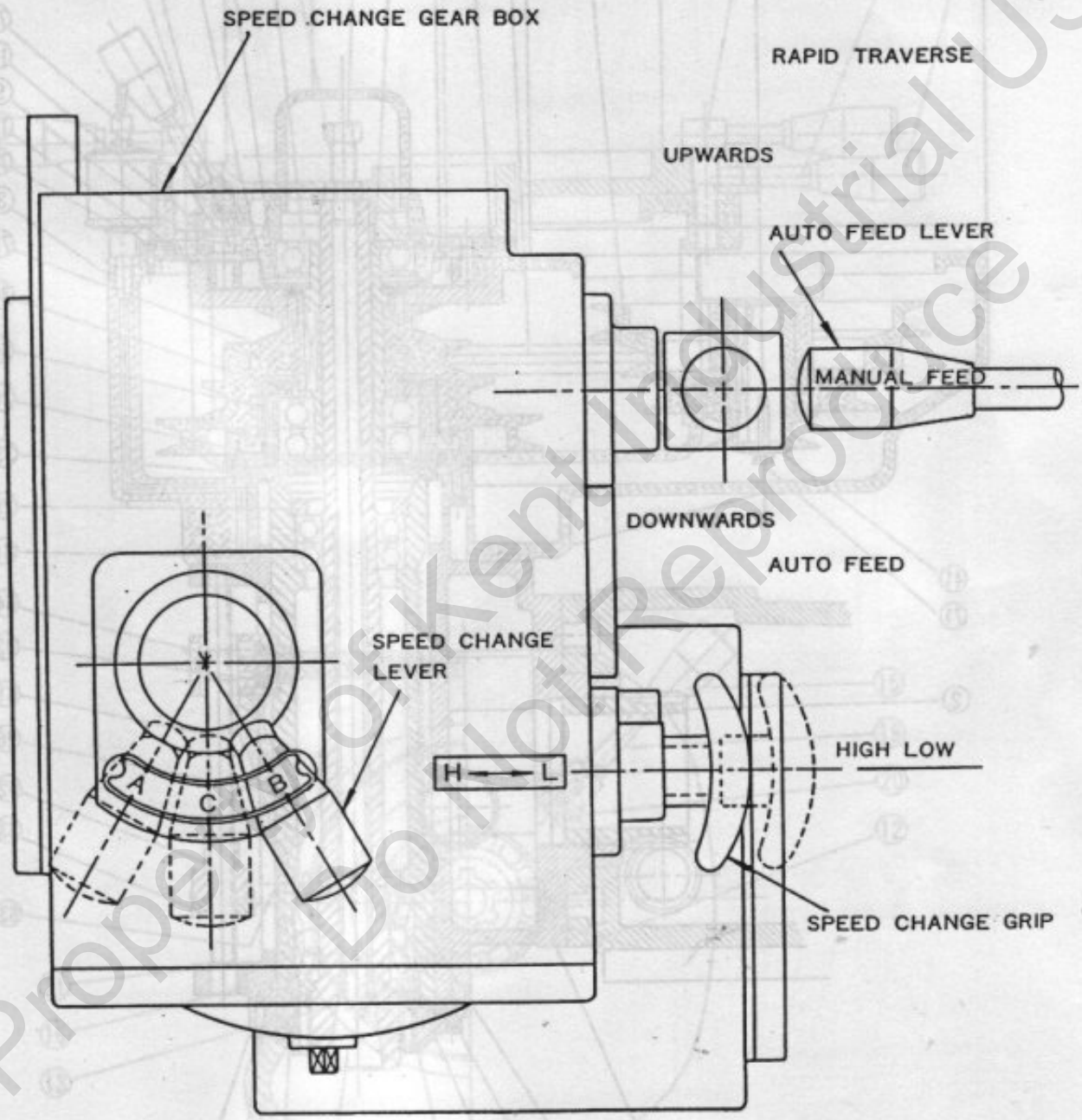

Vertial HEAD

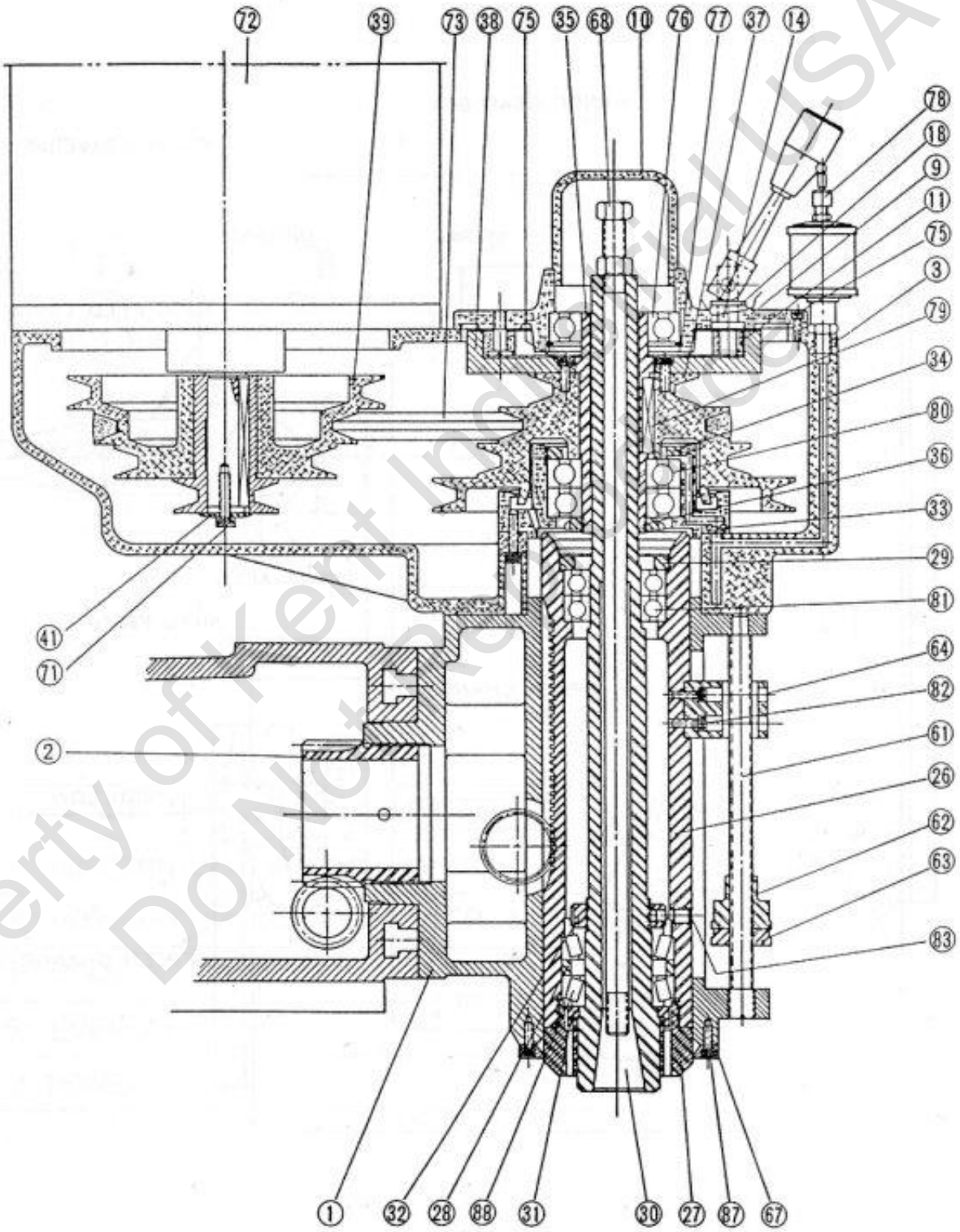

Vertial HEAD

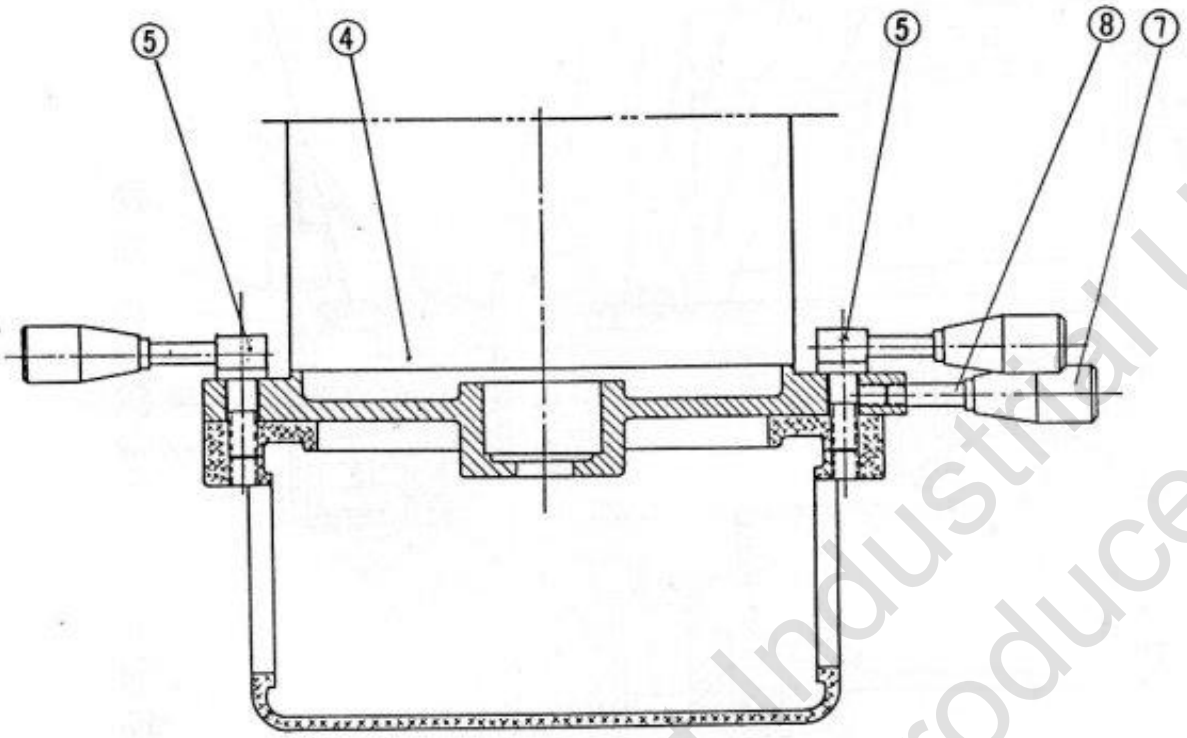

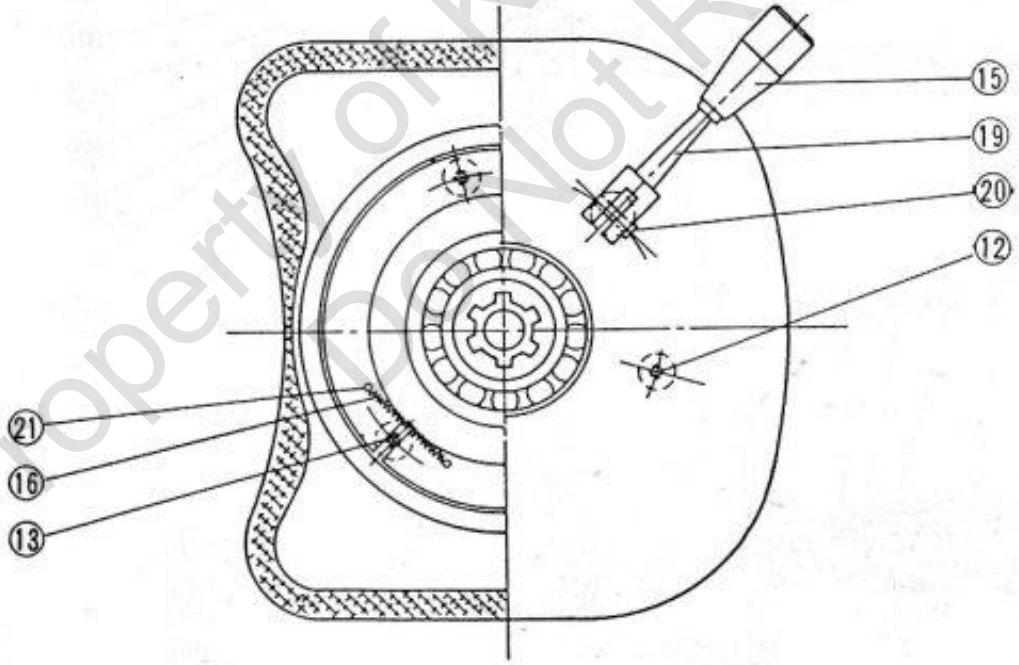

Vertial HEAD

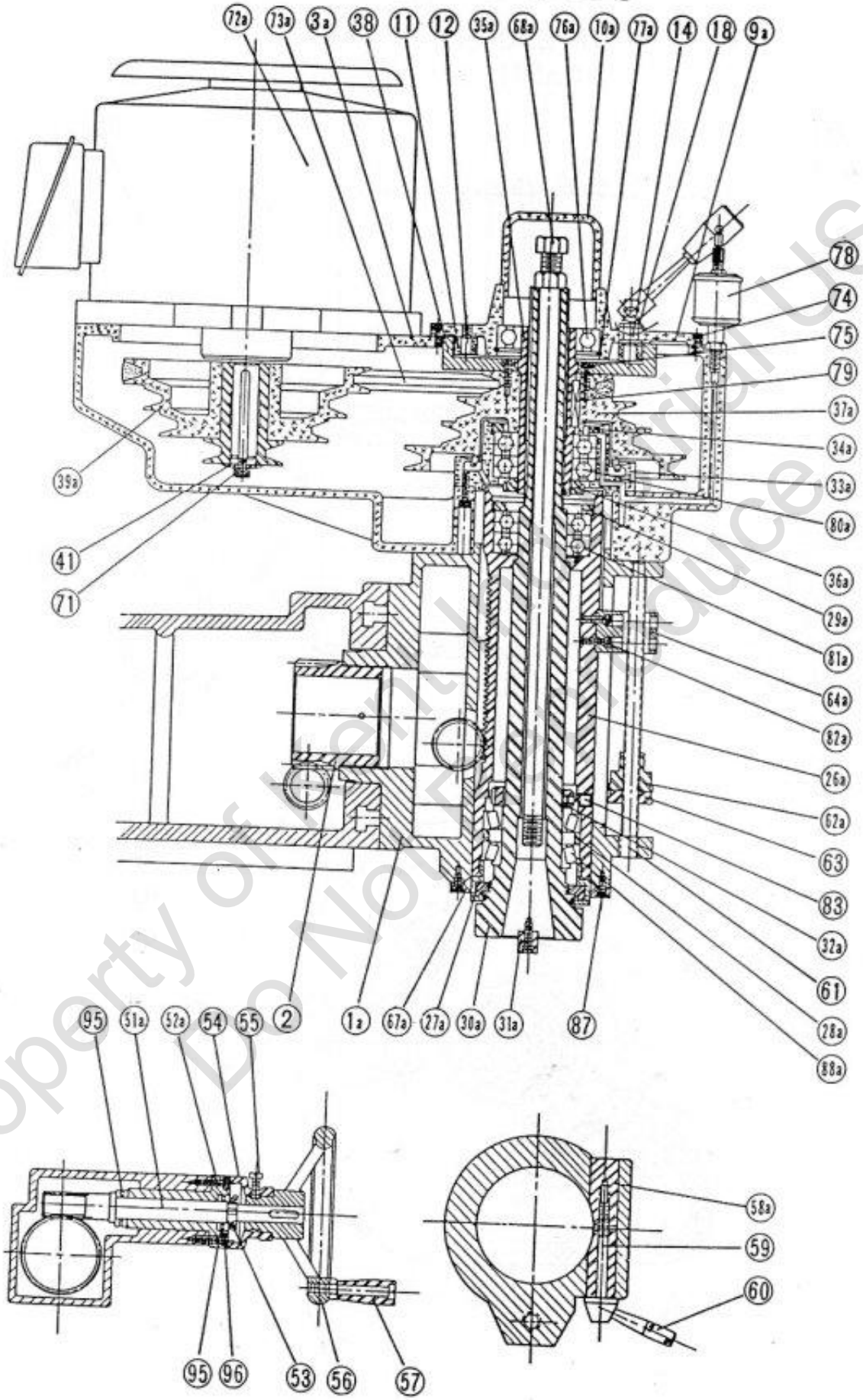

Vertial HEAD

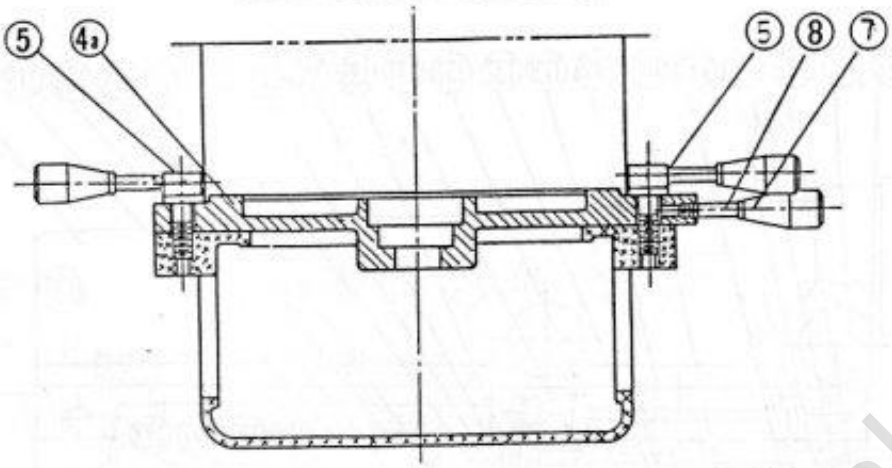

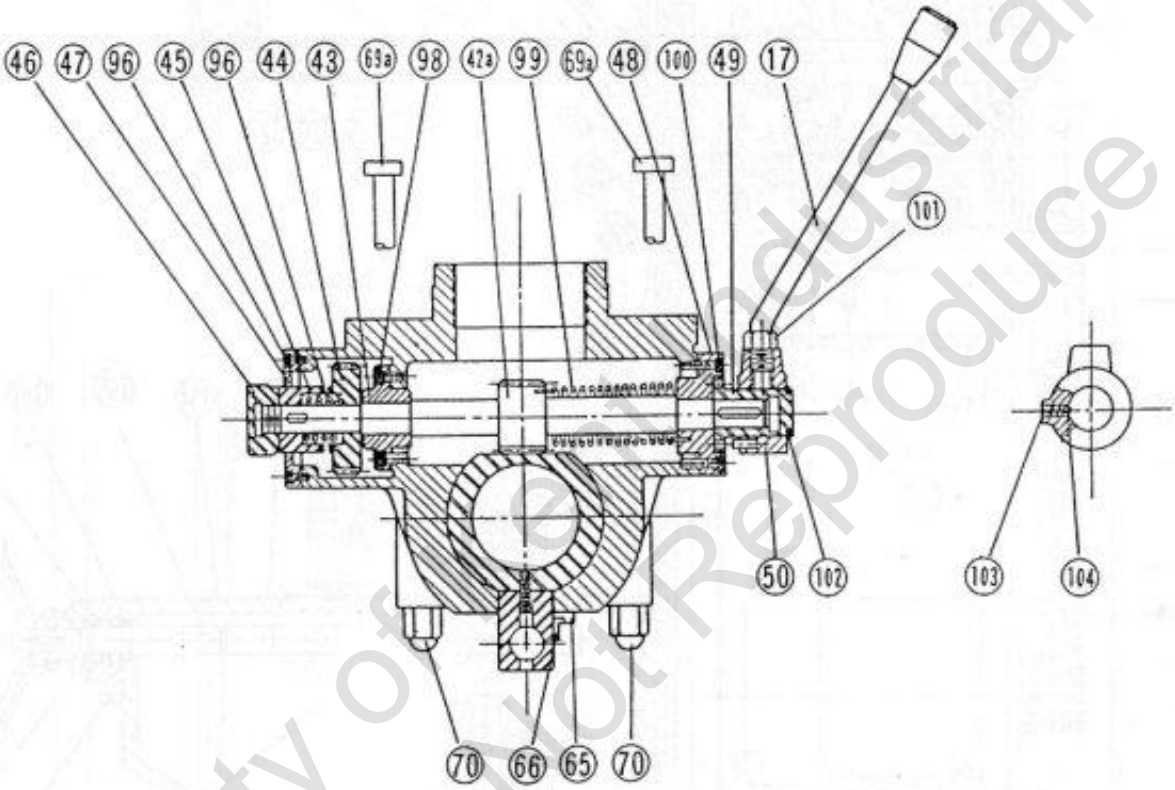

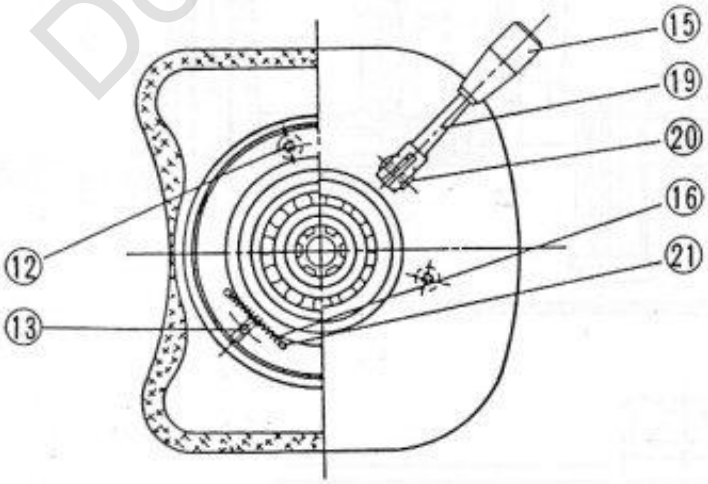

HU-250 ASSEMBLY

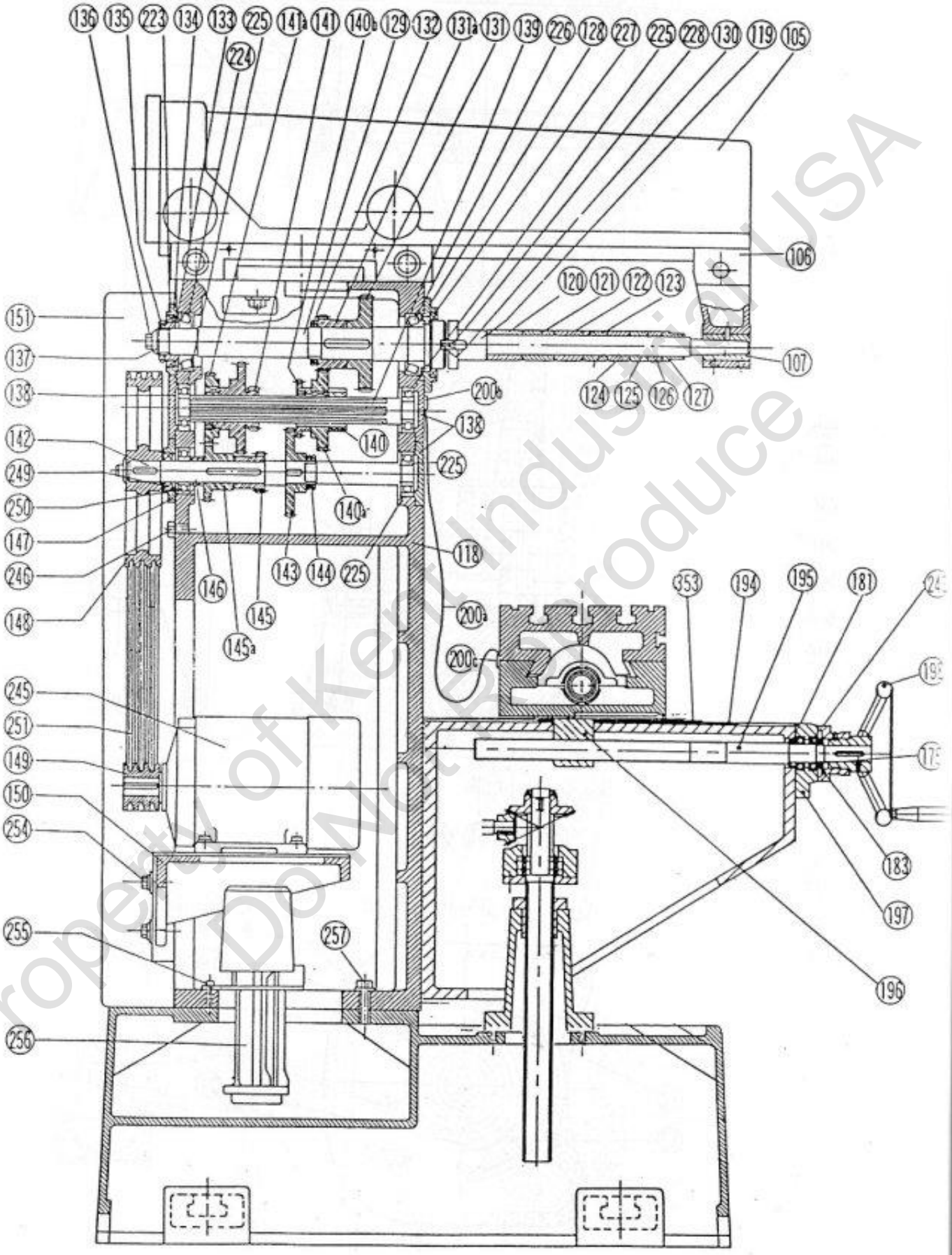

HU-250 ASSEMBLY

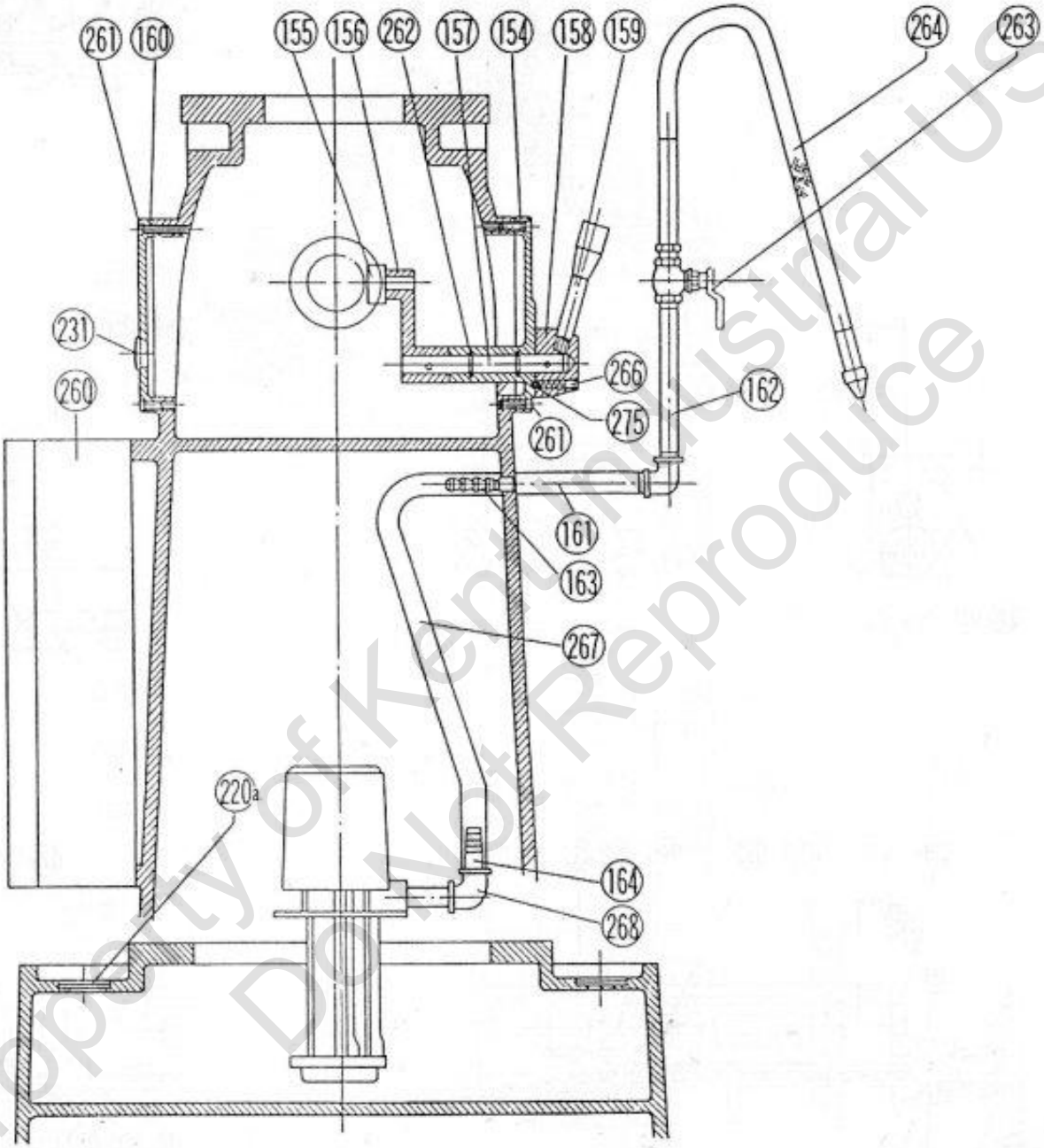

HU-250 ASSEMBLY

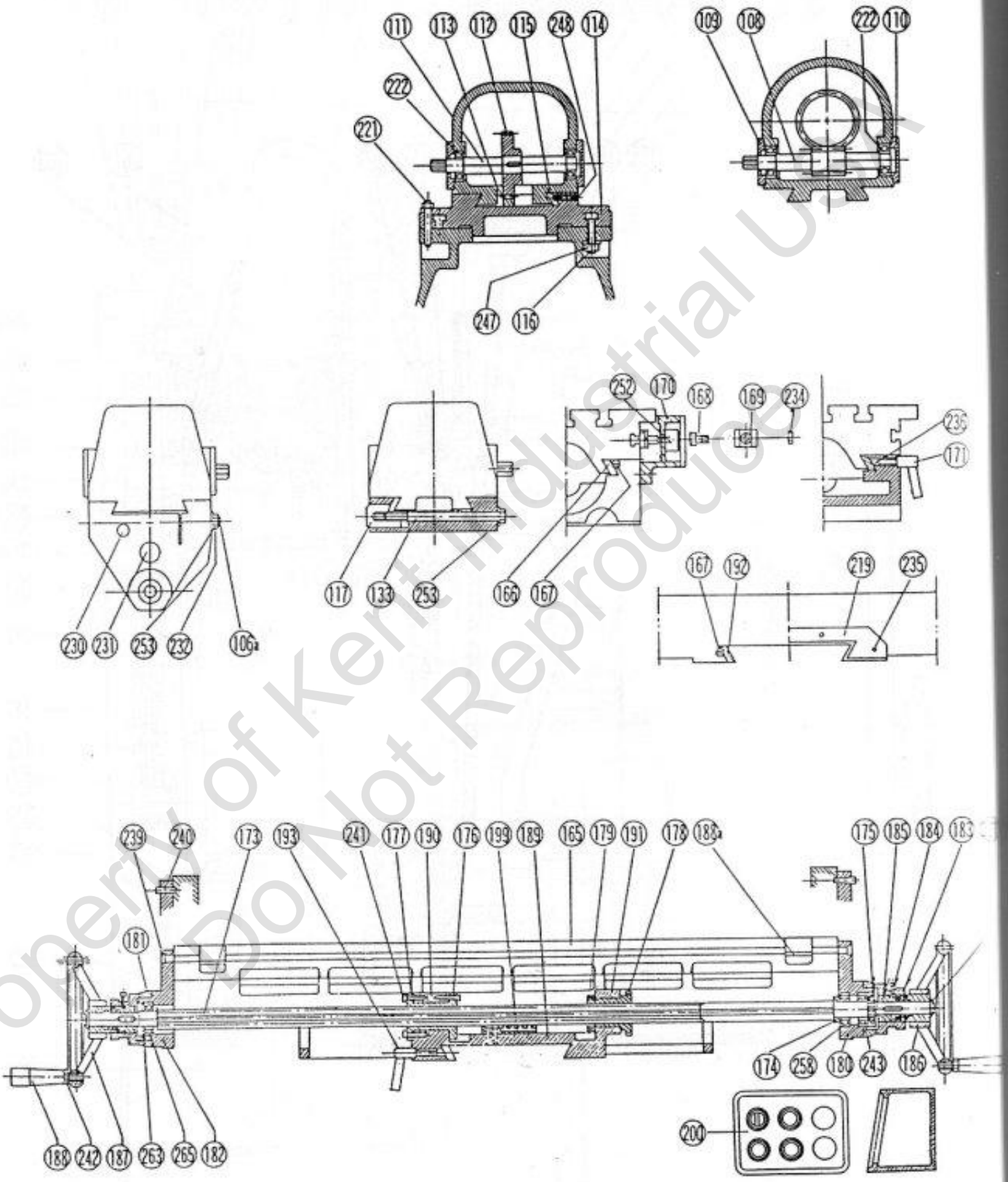

HU-250 ASSEMBLY

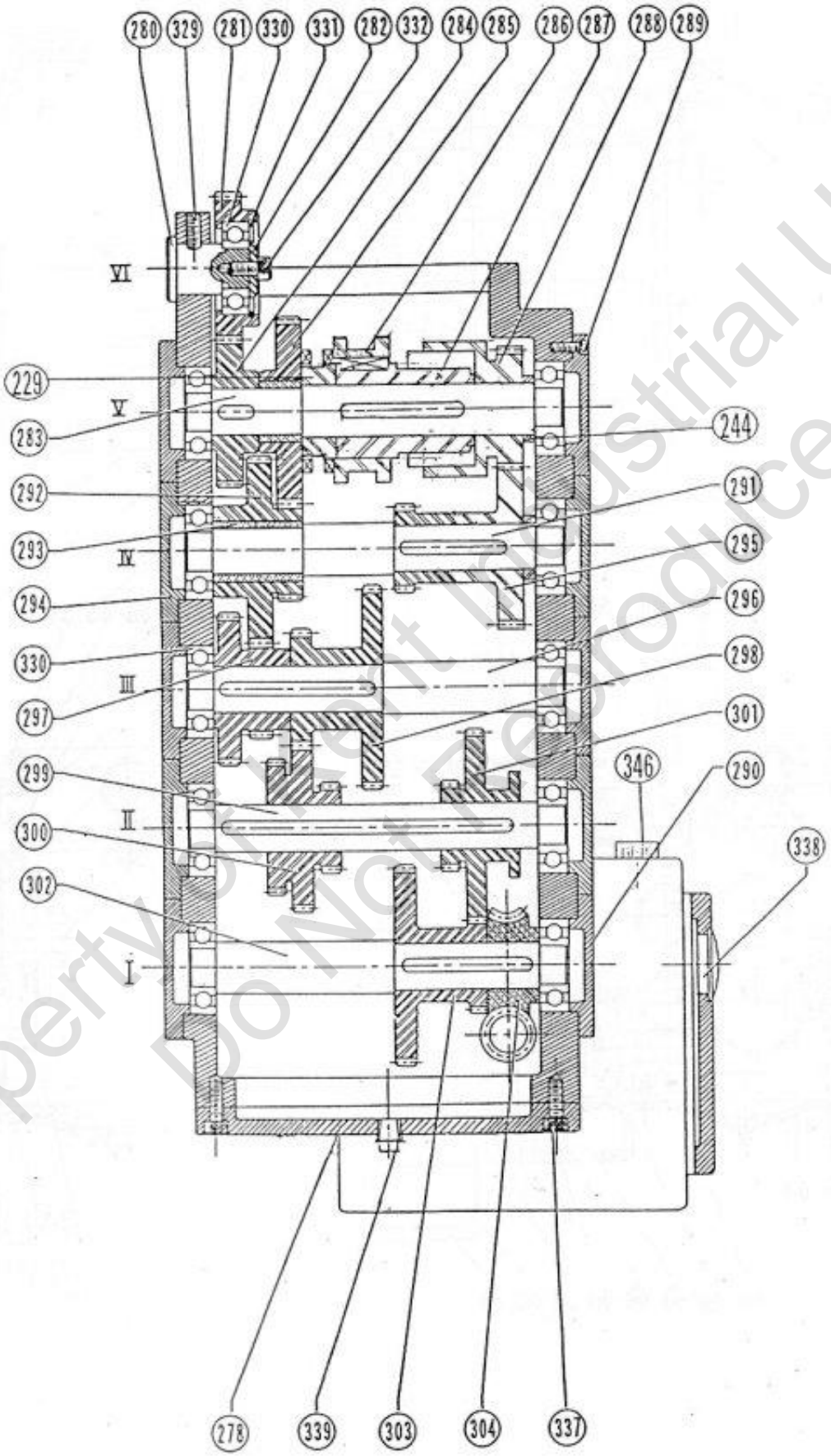

HU-250 ASSEMBLY

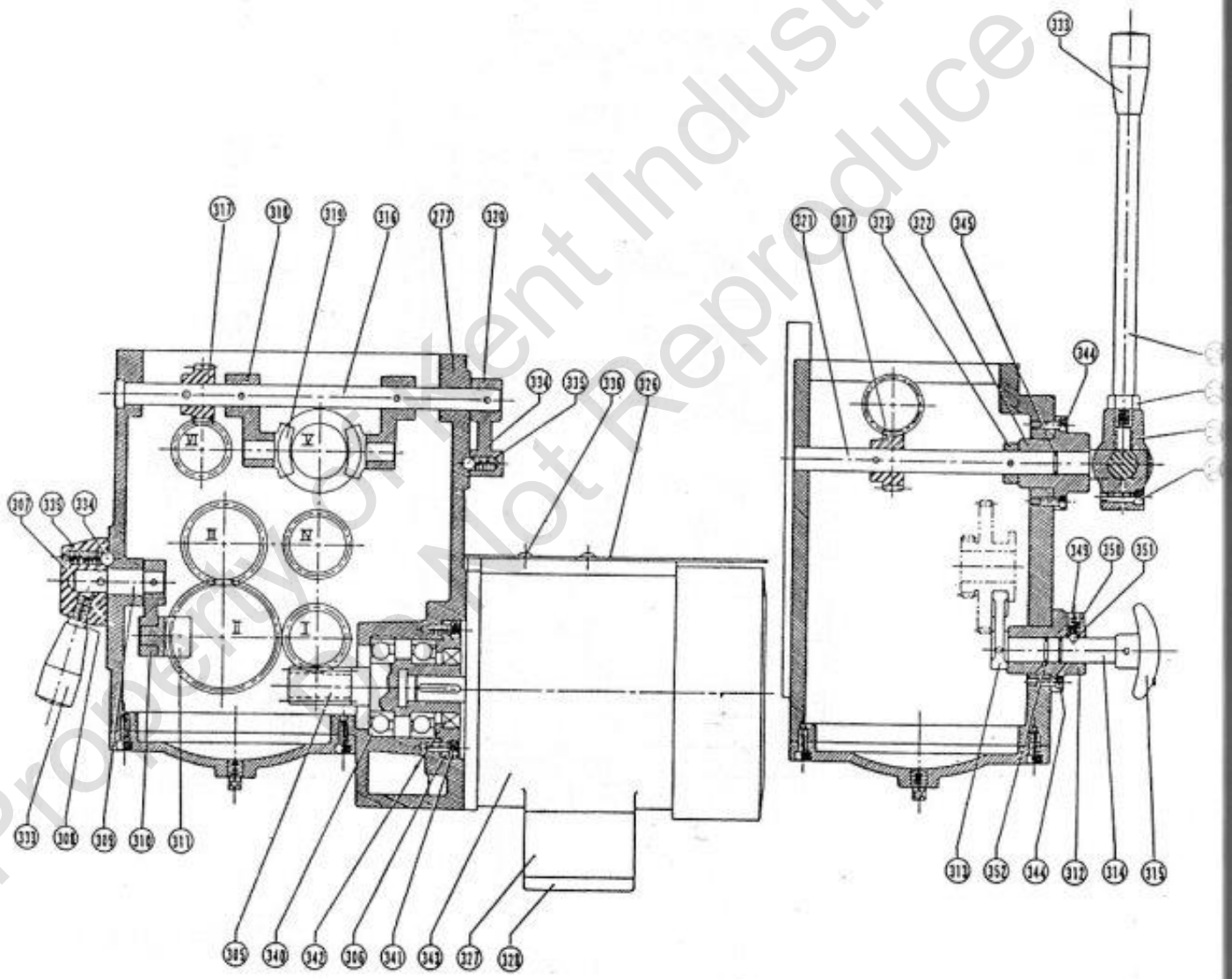

HU-250 ASSEMBLY

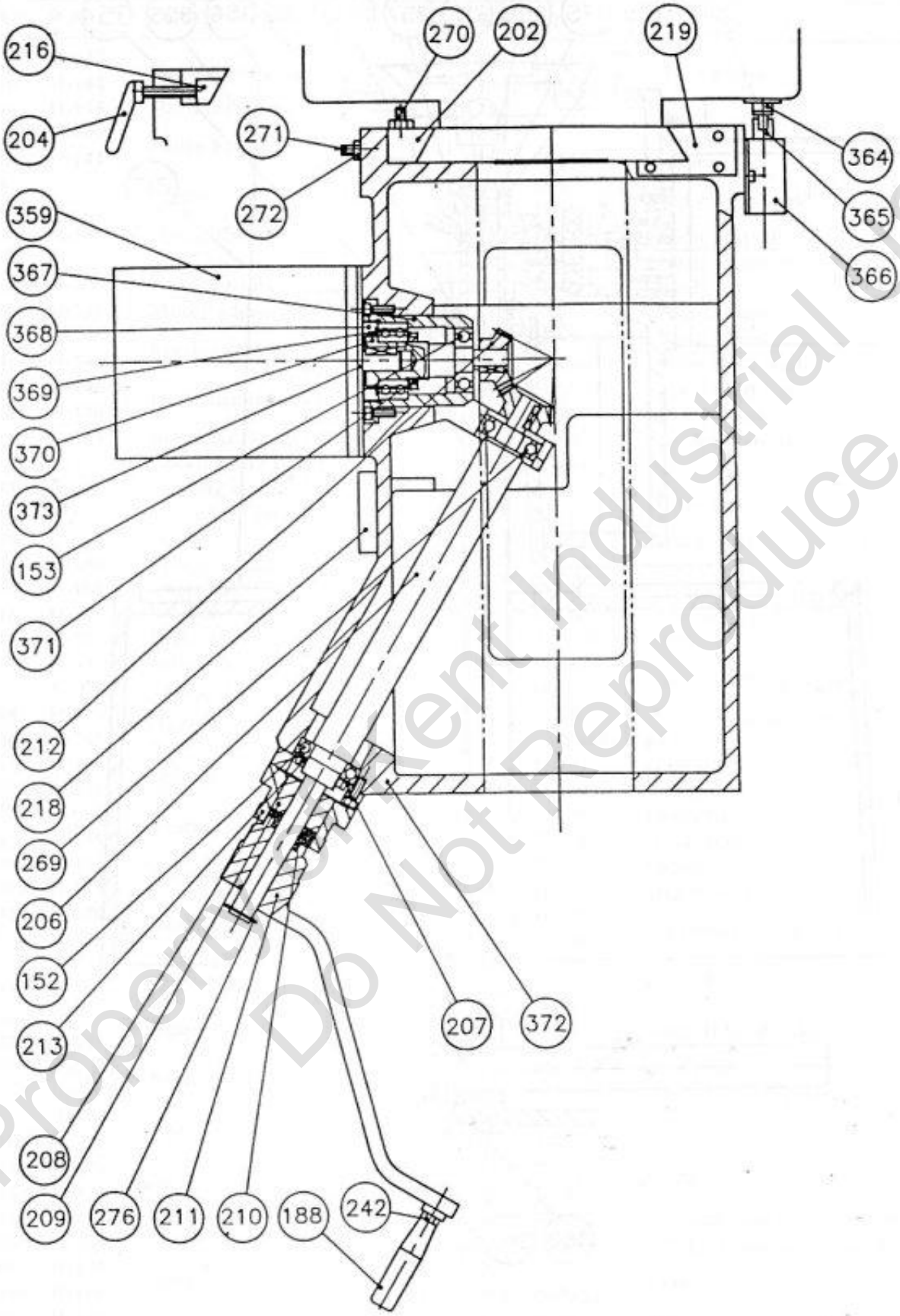

HU-250 ASSEMBLY

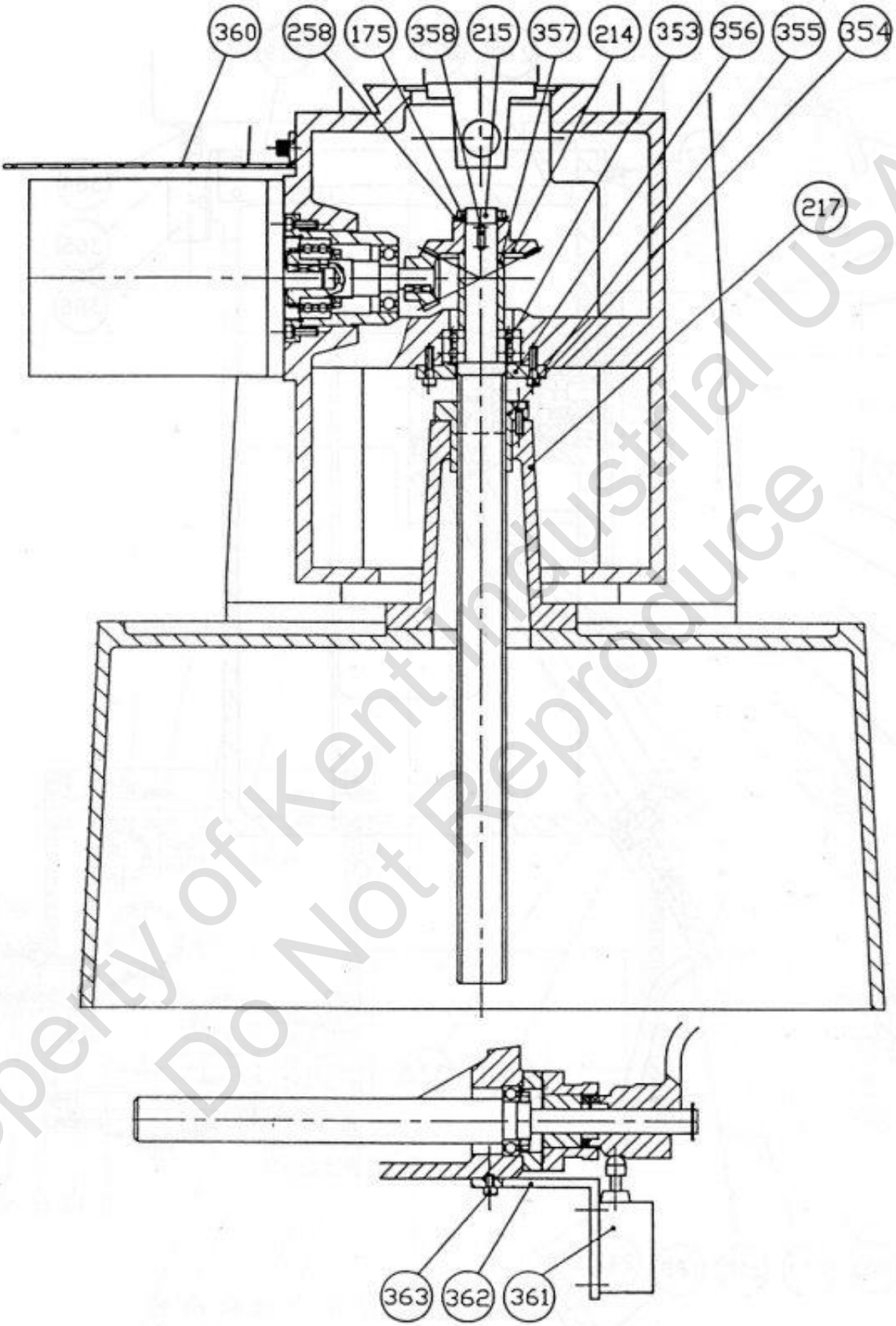

Vertial HEAD/ HU-250 ASSEMBLY

S/N	P/N	DESCRIPTION
1	H-142	Vertical head
1a	H-142	
2	H-145	Head tilting worm gear
3	H-143	Pulley housing
3a	H-143	
4		Motor
4a		
5	H-186	Motor fixed screw
6		
7	H-178	Handel-Knob
8	H-141	Motor adjusting lever
9	H-144	Bearing seat
9a	H-144	
10	H-146	Draw-bar cover
10a	H-146	
11	H-183	Brake block
12	H-184	Locking screw
13	H-185	Locking screw
14	H-147	Brake lock stvd
15	H-178	Plastic
16	H-190	Spring
17	H-161	Lever bar
18	H-54	Washer
19	H-52	Brake bar
20	H-53	Set shafe
21	$\phi 2.5 \times 20$	Spring pin
26	H-148	Quill
26a	H-148	
27	H-150	Spindle bearing tightening nut
27a	H-150	
28	H-149	Bearing spacing collar
28a	H-149	
29	H-152	Bearing tightening nut
29a	H-152	
30	H-179	Vertical spindle
30a	H-179	
31		Vertical spindle oil seal
31a		
32	H-151	Bearing adjusting nut
32a	H-151	
33	H-175	Bearing fixed seat
33a	H-175	
34	H-173	Bearing tightening nut
34a	H-152	
35	H-174	Spindle transmission sleeve
35a	H-174	
36	H-173	Spindle bearing tightening nut
36a	H-180	
37	H-176	Spindle pulley
37a	H-176	
38	H-177	Brake drum
38a	H-177	

S/N	P/N	DESCRIPTION
39	H-153	Motor pulley
39a	H-153	
40		
40a		
41	H-154	Washer
42	H-155	Quill pinion shaft
42a	H-155	
43	H-156	Pinion shaft bush
44	H-157	Clutch worm gear
45	H-82	Clutch
46	H-83	Cluthch knob
47	H-158	Clutch cover
48	H-160	Pinion shaft bush
49	H-86	Pinion shaft cap
50	H-87	Lever bracket
51	H-162	Fine-feed worm
51a	H-162	
52	H-163	Worm bush
52a	H-163	
53	H-164	Thrust bearing tightening nut
54	H-165	Graduated dial
55	T-12	Graduated dial set screw
56	H-166	Hand wheel
57	T-14.T-15	Lever
58	H-167	Quill tightening block
58a	H-167	
59	H-187	Quill tightening bolt
60	G1H-54a	Lever
61	H-181	Quill graduated screw
62	H-189	Graduated dial
63	H-188	Dial adjusting nut
64	H-168	Quill stop block
65	H-169	Depth scale
66	H-100	Depth indicator
67	H-170	Oil cloth holding ring
67a	H-170	
68	H-171	Draw-bar
68a	H-171	
69		Vertical head fixed screw
69a		
70	M	Fixed nut
71	M8×16	Hexagon socket head screw
72	1HP	Motor
72a	2HP	
73	B-36	V belt
73a	B-38	
74	M5×12	Hexagon socket head screw
75	M6×12	Hexagon socket head screw
76	6208ZZ	Bearing
76a	6209ZZ	
77	R-80	Snap ring
77a	R-85	

S/N	P/N	DESCRIPTION
78	1/8" × 1/2"	Glass oil cup
79	7mm	Square key
80	6208	Bearing
80a	6209	
81	6206	Bearing
81a	6208	
82	M5 × 16	Hexagon socket head screw
83	M10 × 10	Headless set screw
87	M5 × 10	Hexagon socket head screw
88	32008X	Tapered roller bearing
88a	32010X	
95	51103	Thrust bearing
96	M5 × 10	Hexagon socket lead screw
97	STD	Spring
98	M6 × 12	Hexagon socket head screw
99	H-159	Spring
100	M6 × 20	Hexagon socket head screw
101	1/2"	Nut
102	E-19	Snap ring
103	M8 × 10	Headless set screw
104	1/4" DIA	Steel ball
105	R-1	Overarm
106	R-25	Arbor support
106a	R-24	Tightening bolt
107	R-27	Arbor support bush
108	R-7	Angular adjusting worm
109	GIR-5	Worm bearing cover (left)
110	GIR-6	Worm bearing cover (right)
111	R-10	Gear shaft
112	R-9	Rack feed gear
113	R-16	Rack
114	R-2	Swivel base
115	R-17	Overarm gib
116	R-18	Swivel base fixed bolt
117	R-19	Overarm clamping block
118	C-4	Column
119	C-5	Arbor
120	C-6A	Arbor spacing collar
121	C-6B	Arbor spacing collar
122	C-6C	Arbor spacing collar
123	C-6D	Arbor spacing collar
124	C-6E	Arbor spacing collar
125	C-6F	Arbor spacing collar
126	C-6G	Arbor spacing collar
127	C-9	Arbor nut
128	C-10	Horizontal spindle front bearing cover
129	C-11	Horizontal spinddle
130	C-12	Arbor set-in lug
131	C-13	Horizontal spindle gear
131a	C-14	
132	C-15	Lock nut

S/N	P/N	DESCRIPTION
133	C-16	Spindle sleeve
134	C-17	Spindle back bearing cover
135	C-18	Bearing tightening nut
136	C-19	Draw-in bar
137		Draw-in bar lock washer
138	C-20	"A" transmission shaft bearing cover
139	C-22	"A" transmission shaft
140	C-23	"A" shaft speed change gear
140a	C-23A	Speed change driving block
140b	C-23B	
141	C-24	"A" shaft speed change gear
141a	C-24	
142	C-25	"B" transmission shaft
143	C-26	"B" shaft gear
144	C-27	"B" shaft gear tightening nut
145	C-29	"B" shaft gear
145a	C-29	
146	C-30	"B" shaft collar
147	C-31	"B" shaft back bearing cover
148	C-32	"B" shaft pulley
149	C-33	Motor pulley
150	C-34	Motor plate
151	C-36	Pulley shield
152	6006ZZ	Bearing
153	6304ZZ	Bearing
154	C-37	Speed change box cover
155	C-38	Speed change shifting block
156	C-39	Speed change shifting lever
157	C-40	Shifting lever shaft
158	C-41	Grip fitting seat
159	C-42	Grip
160	C-43	Column oil bath cover
161	C-59	Cutting fluid pipe
162	B-3	Cutting fluid pipe
163	PT3/8	Pipe coupling
164	PT3/8	Pipe coupling
165	T-45	Table
166	T-46	Table gib
167	T-47	Gib screw
168	M6 × 12L	Hex socket heard bolt
169	SP-071	Dog
170	S-45A	Micro switch bracket
171	T-68	Table clamping screw
172	T-68	Clamp handle
173	T-49	Table lead screw
174	T-51	Screw collar
175	T-50	Lock nut
176	T-52	Leadscrew fixed nut
177	T-53	Leadscrew adjusting nut
178	T-54	Auto longitudinal feed gear
179	T-37	Transmission gear tightening nut

HU-250 ASSEMBLY

S/N	P/N	DESCRIPTION	S/N	P/N	DESCRIPTION
180	T-55	Leadscrew bearing seat (left)	226	32210	Tapered roller bearing
181	T-51	Spacer	227	T.C.65×88×10	Oil seal
182	T-57	Leadscrew bearing seat (right)	228	M6×20	Hexagon socket head screw
183	S-107	Graduated dial	229	G-64A	Spacer
184	T-12	Graduated dial set screw	230	M12	Oil feed hole screw
185	T-59	Handwheel clutch	231	STD	Oil level indicator
186	T-60	Han wheel clutch	232	1/2"	Nut
187	T-61	Handwheel	233	1/2"	Bolt
188	S-38-39	Grip	234	SP-070	
188a	T-62	Oil filter net	235	3/16"	Round head screw
189	S-29	Saddle	236	1/4"	Clamp copper block
190	S-31	Nut cover	237	S-19	Snap ring
191	S-32	Gear fixed cover	238	H-52	Snap ring
192	S-30	Saddle gib	239	M8×25	Hexagon socket head screw
193	T-68	Sadddle clamping screw	240	ø3×32	Tapered pin
194	S-103	Chip guard	241	M6×20	Hexagon socket head screw
195	S-105	Saddle lead screw	242	7/16"	Nut
196	S-35	Leadscrew nut	243	6005ZZ	Bearing
197	S-106	Leadscrew bearing seat	244	G63-2	Spacer
198	S-37	Handwheel	245	2HP	Motor
199	G1S-11	Oil pipe fittings	246	M12×20	Hexagon head screw
200	S-133	Switch box	247	1/2"	Nut
200a	S-40	Chip guard	248	M8×35	Headless set screw
200b	S-42	Chip guard fixed plate	249	T.C.35×50×11	Oil ring
200c	S-42		250	6206	Bearing
201	K-23	Knee	251	A-55	V belt
202	K-24	knee gib	252	STD	Micro switch
203	G1K-3	Oil pump cover	253	1/2"	Washer
204	K-41	Knee clamp screw	254	M10×35	Hexagon head crew
205	K-26	Knee elevating gear shaft sleeve	255	M6×12	Hexagon socket head screw
206	K-111	Gear shaft	256	40W	Cutting fluid pump
207	K-113	Graduated dial seat ring	257	M12×45	Hexagon head screw
208	K-29	Graduated dial	258	AW0.5	Washer for ball bearing
209	K-30	Knee handle clutch	259	M10×25	Hexagon socket head screw
210	T-66	Spring	260	STD	Electric box
211	K-32	Handle	261	M6×16	Hexagon socket head screw
212	K-109	Kenn elevating gear	262	ϕ16	O ring
213	AN-06	Lock nut	263	P.T. 3/8"	Cutting fluid switch
214	K-110	Knee elevating gear	264	P.T. 3/8"	Flexible metal hose
215	K-106	Knee elevating screw	265	6304ZZ	Bearing
216	K-25	Clamping copper block	266	M8×10	Headless set screw
217	K-107	Knee elevating screw set nut	267	3/4" I.D.	Plastic hose
218		Oil pipe fittings	268	P.T. 3/8"	Pipe bend connection
219	K-37	Chip guard	269	6304ZZ	Bearing
219a	G1K-20	Bearing oil ring	270	M10×40	Hexagon head screw
220	B-5	Machine base	271	M8×30	Headless set screw
220a		Oil filter net	272	M8	Nut
221	ø7×65	Tapered pin	273	Pull type	Oil pump
222	6204ZZ	Bearing	274	AW04	Washer for ball bearing
223	T.C.50×70×10	Oil seal	275	1/4" DIA	Steel ball
224	30208	Tapered roller bearing	276	S-22	Snap ring
225	6305	Bearing			

S/N	P/N	DESCRIPTION
276a	C-19	Flexible metal hose
277	G-54	Gear box
278	G-55	Bottom cover
279	G-3	Oil vover
280	G-56	Sixth gear shaft
281	G-57	Sixth shaft gear
282	G-58	Sixth shaft washer
283	G-59	Fifth gear shaft
284	G-60	Fifth shaft transmission gear
285	G-61	Fifth shaft low speed gear
286	G62A	Rapid feed clutch
287	G63-1	Clutch coupling head
288	G-63A	Gear
289	G-65	Gear shaft cover
290	G-66	Gear shaft eover
291	G-67	Fourth gear shaft
292	G-68	Fourth shaft transmission gear
293	G1G-17	Copper sleeve
294	G1G-18	Gear shaft cover
295	G-69	High speed transmission gear
296	G-70	Third gear shaft
297	G-71	Third shaft small transmission gear
298	G-72	Third shaft large transmission gear
299	G1G-23	Second gear shaft
300	G-74	Second shaft three-step gear
301	G-75	Second shaft speed change gear
302	G-76	First gear shaft
303	G-77	First shaft gear
304	G-78	First shaft worm gear
305	G-79	Motor transmission worm
306	G-80	Bearing fixed cover
307	G-81	Handle fitting seat
308	G-33	Lever
309	G-82	Fitting seat pivot
310	G-83	Speed change shifting arm
311	G-84	Speed change yoke
312	G-85	High-low speed change shaft bracket
313	G-86	Speed change fan arm
314	G-87	High-low speed change shaft
315	G-40	Speed change grip
316	G-88	Suspension bar
317	G-89	Reversing gear
318	G-90	High-low speed shifting arm
319	G-91	High-low speed shifting block
320	G-92	Speed change lever setting element
321	G-93	High speed shaft
322	G-48	High-low speed shaft fixed seat
323	G-49	High-low speed shaft setting ring
324	G-50	Lever fitting seat
325	G-51	Lever
326	G-95	Motor shield
327	G1G-51	Electric wire protection box

S/N	P/N	DESCRIPTION
328	G1G-52	Box shield
329	M6×16	Headless set screw
330	6203	Bearing
331	H-40	Snap ring
332	M6×12	Hexagon socket head screw
333	STD	Plastic grip
334	$^3/_8$" DIA	Steel ball
335	STD	Spring
336	$^3/_{16}\times{}^1/_2$"	Round head screw
337	M6×16	Hexagon socket head screw
338	STD	Oil level indicator
339	P.T. $^1/_8$"	Plug screw
340	7206	Angular contact ball bearing
341	M6×16	Hexagon socket head screw
342	T.C. 30×50×11	Oil Seal
343	$^1/_2$HP	Motor
344	M5×10	Hexagon socket head screw
345	ϕ14	O ring
346	M12	Oil feed hole screw
347	$^1/_2$"	Nut
348	M6×16	Hexagon socket head screw
349	M8×10	Headless set screw
350	STD	Spring
351	$^1/_4$" DIA	Steel ball
352	ϕ16	O ring
353	#5305	Bearing
354	K-108	Nut
355	M6	Hex. Socket Head Bolt
356		Spacer
357	K-105	Spacer
358	5×5×20L	Key
359	$^1/_2$-6P-$^1/_{10}$	Motor
360	K-117	Cover
361	MJ7103	Limit Switch
362	SC-68	Limit Switch bracket
363	M6	Hex. Socket. Head Bolt
364	K-79	Dog
365	Z-15GQ22-B	Limit Switch
366	K-119	Cover
367	K-125	Bearing Bracket
368	K-112A	Nut
369	#5206	Bearing
370	K-115	Shaft
371	AN-06	Nut
372	K-23	Knee
373	K-118	Shim

Please find the part number from drawings. The material number and description will help with identification

HU-250 HEAD

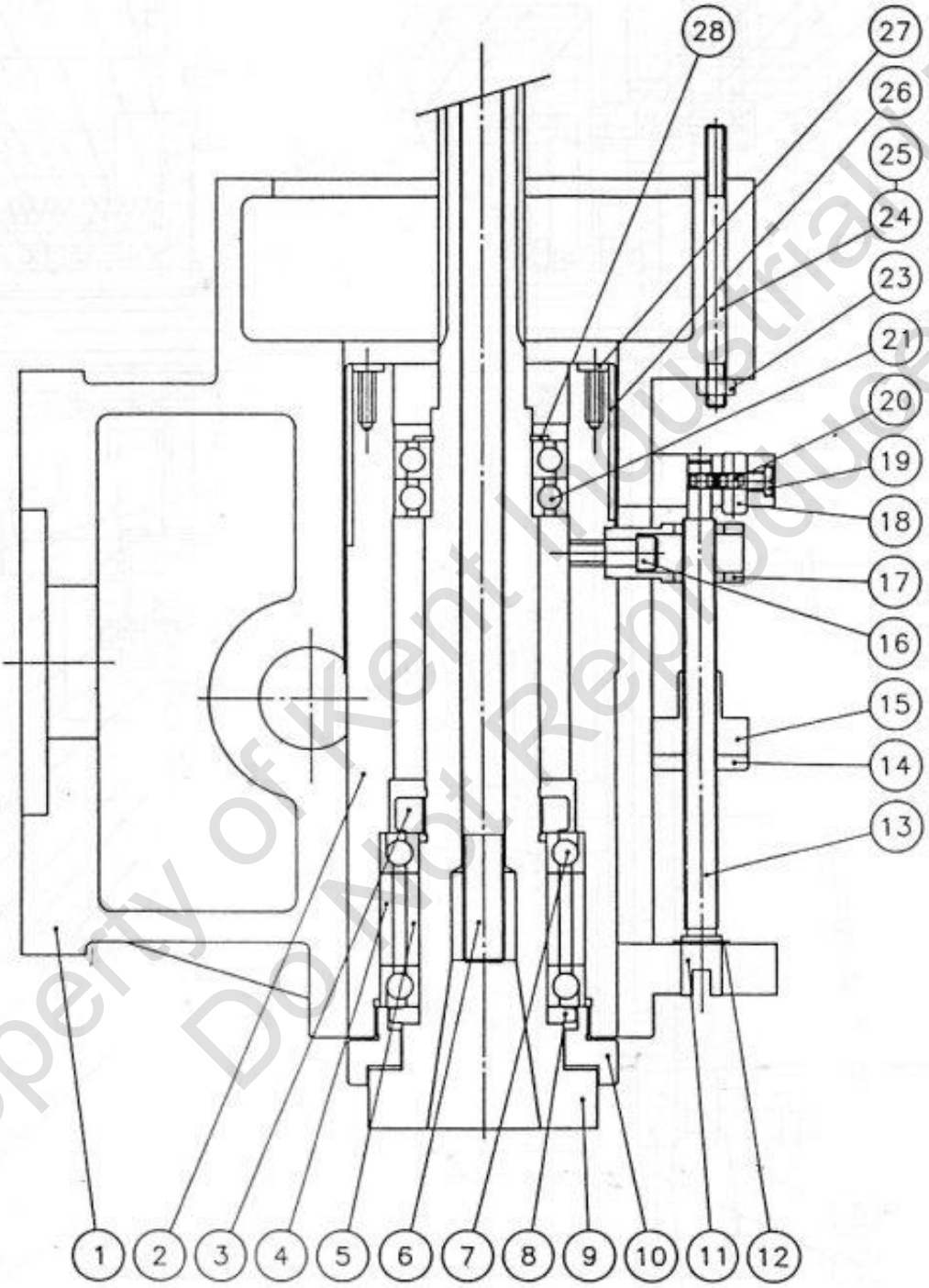

Verital HEAD

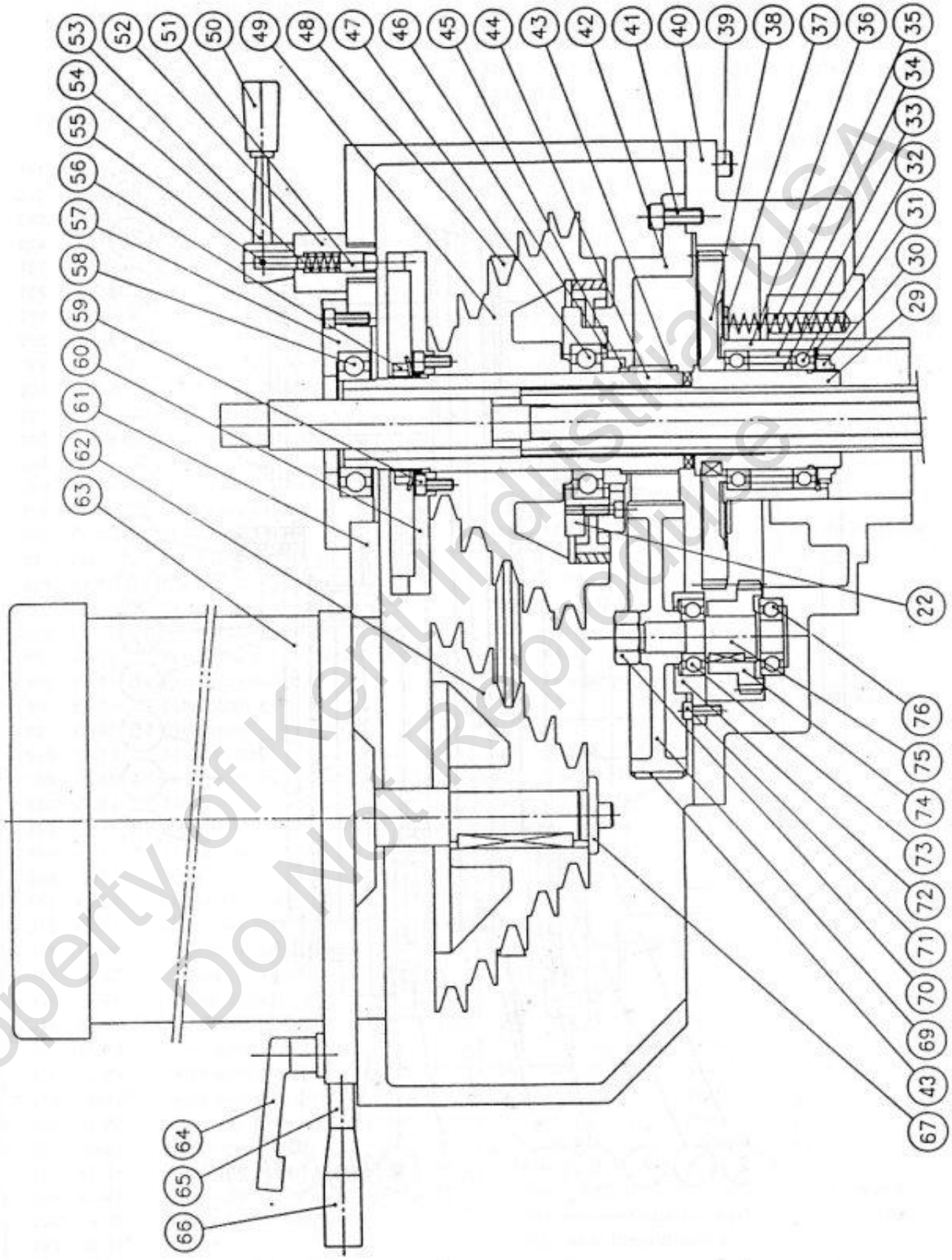

HU-250 HEAD

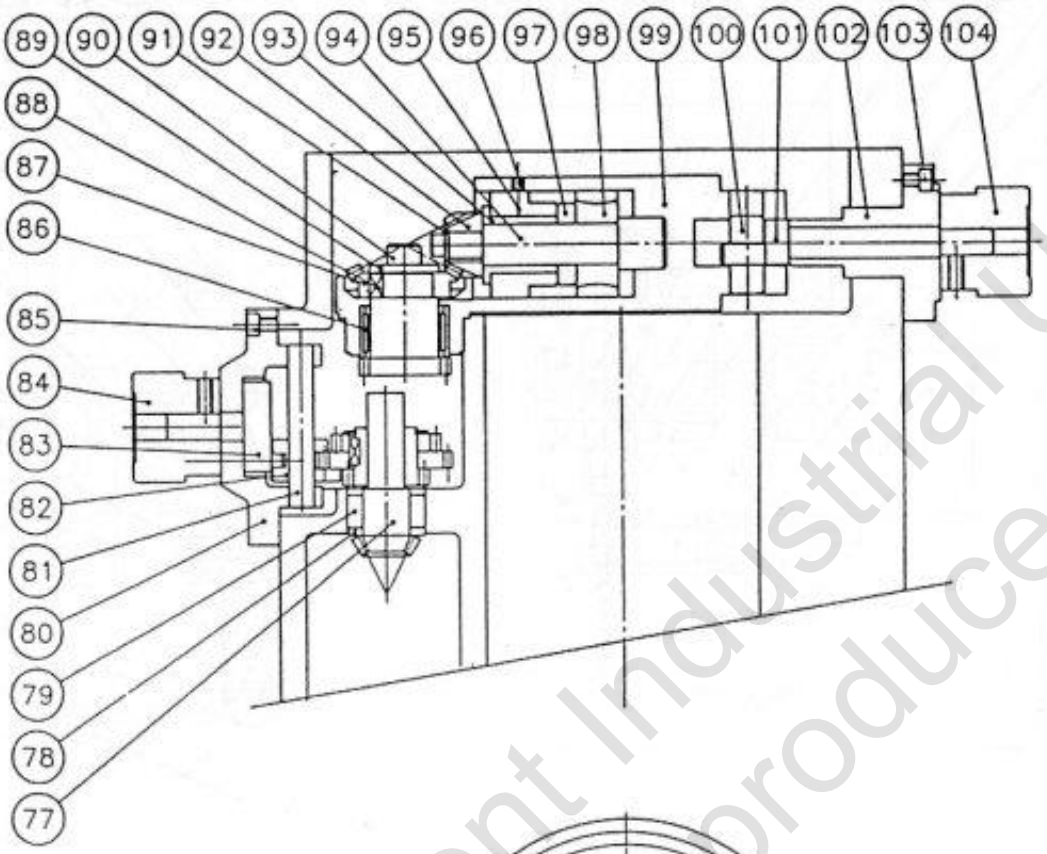

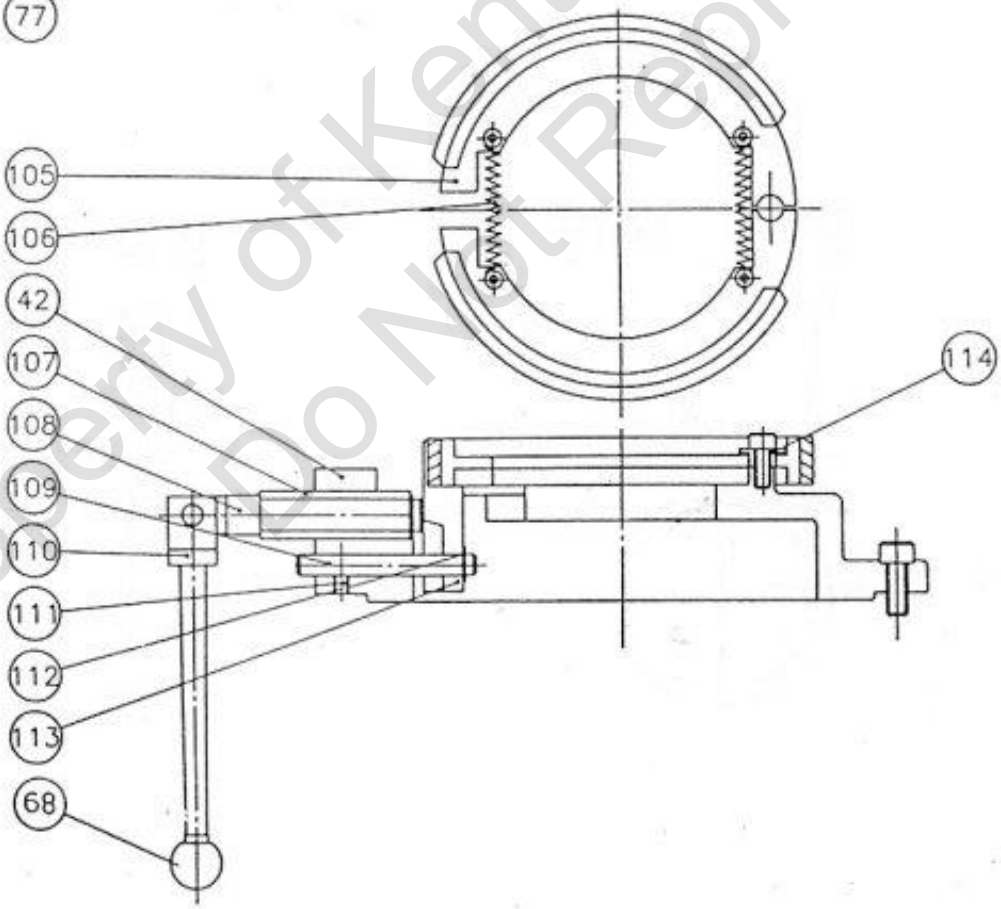

HU-250 HEAD

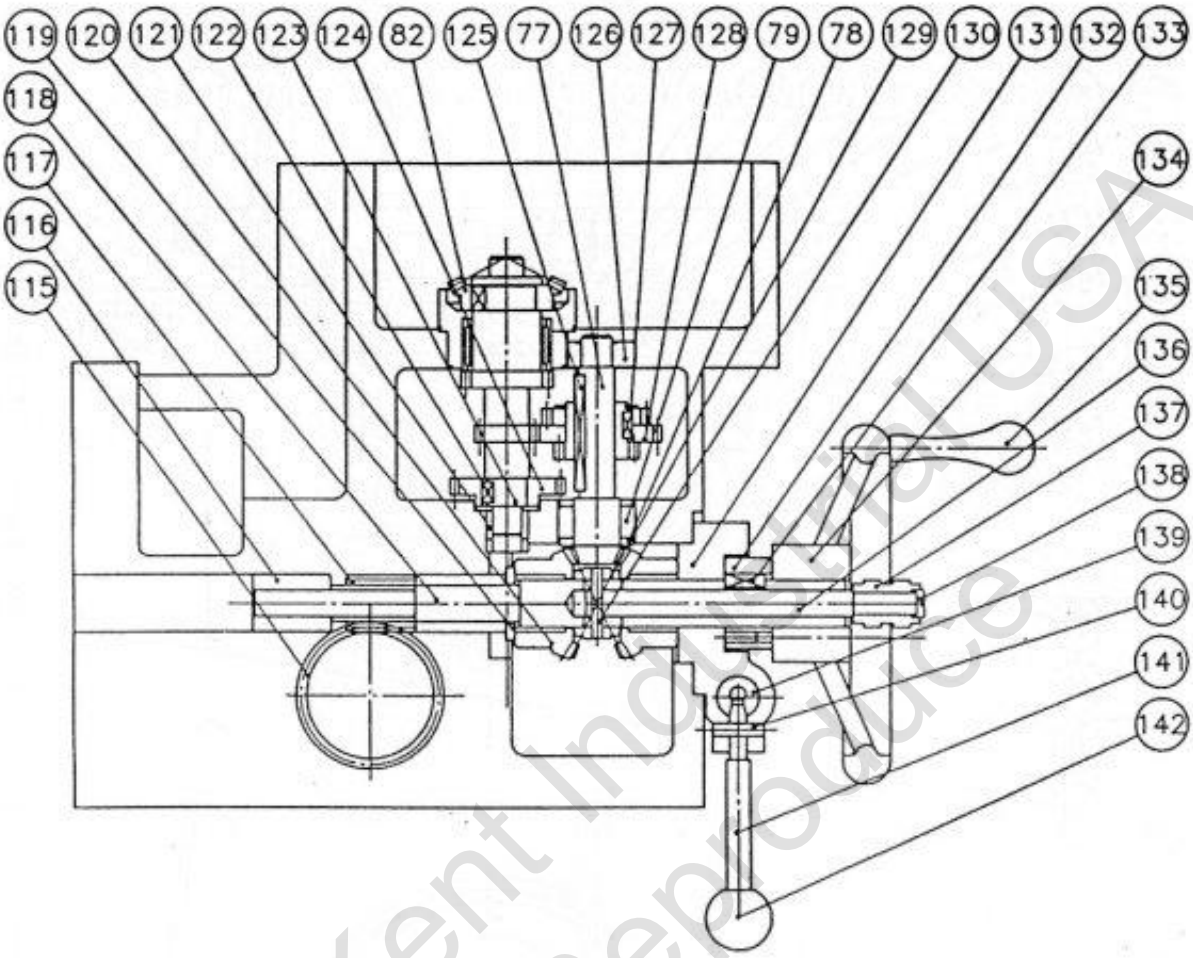

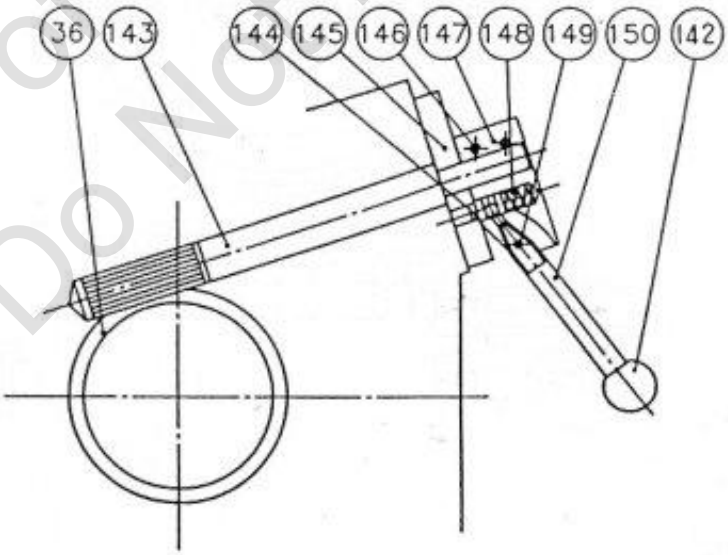

HU-250 HEAD

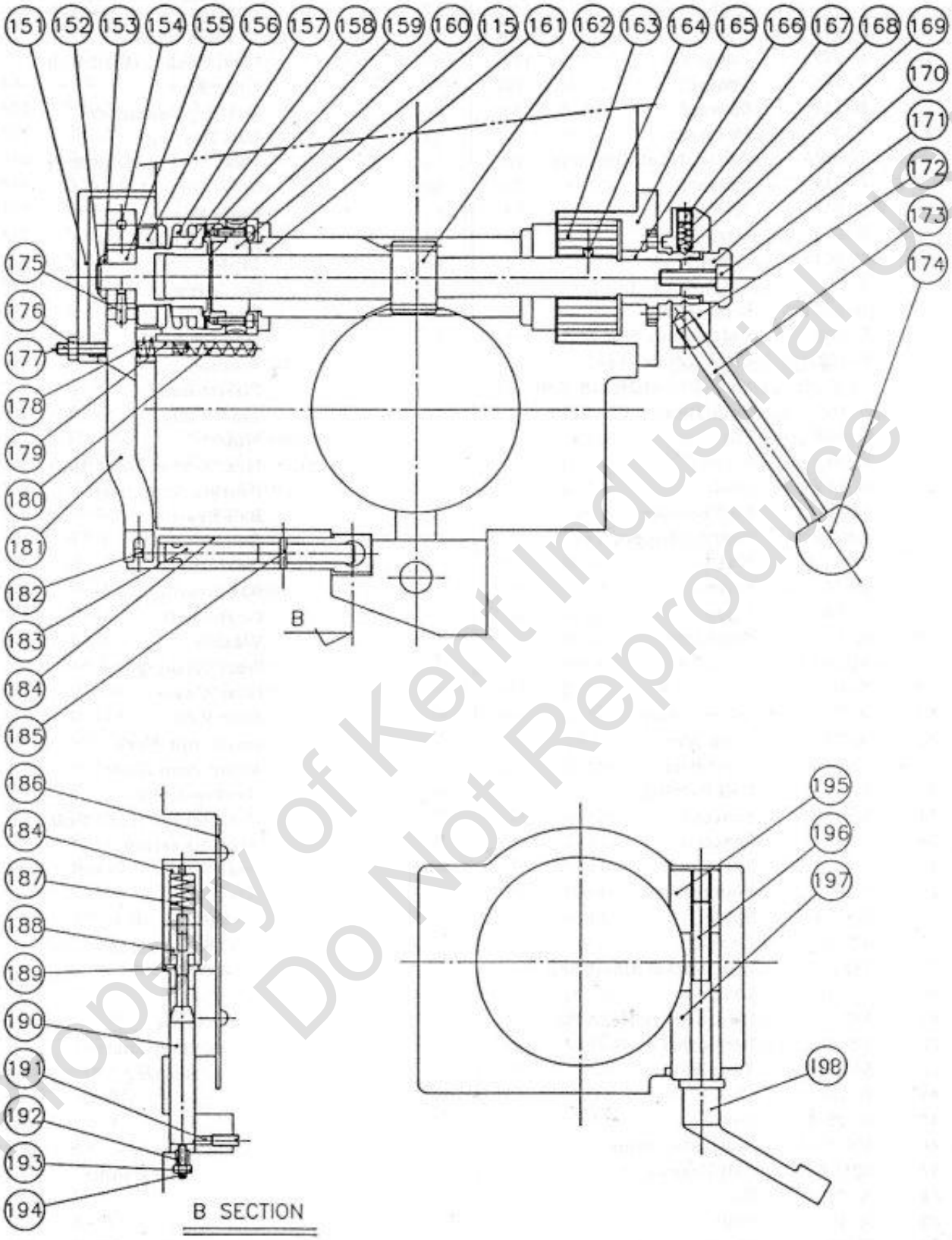

HU-250 HEAD

S/N	P/N	DESCRIPTION	S/N	P/N	DESCRIPTION
1		Vertical Head	53	G-32	Spring
2	B-142	Quill	54	H-236	Control Shaft
3	B-129	Lock Nut	55	M3×15L	Hex. Socket Head Bolt
4	B-136	Spacer	56	A-74	Lock Nut
5	B-137	Sparcer	57	VS-13	Bearing Supporter
6	A-1	Draw Bar	58	6009ZZ	Ball Bearing
7	7010P4	Angular Ball bearings	59	M6×20L	Hex. Socket Head Bolt
8	B-134	Spacer	60	A-19-1	Stop Ring
9	B-127	Spindle	61		Pully Box
10	B-133	Lock Nut	62	A-49	Motor Pully
11	B-164	Index Shaft	63	3HP-4P	Motor
12	S-16	Snap Ring	64	H-186	Set Screw
13	B-164	Index Shaft	65	H-141	Handle
14	B-161	Index Shaft Nut	66	H-178	Handle-knob
15	B-162	Feed Adjust Nut	67	H-154	Washer
16	M10	Hex. Socket Heard Bolt	68	A-29	Plastic Ball
17	B-163	Slide Block	69	VS-62	Time Pully
18	B-184	Pin	70	5/8	Nut
19	B-185	Screw	71	M5×15L	Hex. Socket Head Bolt
20	B-183	Shaft	72	VS-64	Bearing Supporter
21	6008	Ball Bearing	73	6203	Ball Bearing
22	VS-46-1	Bearing Supporter	74	VS-66	Gear
23	7/16	Nut	75	VS-67	Gear Shaft
24	A-76	Screw	76	6203	Ball Bearing
25	A-76-1	Screw	77	B-31	Gear Shaft
26	B-128	Quill Skirt	78	B-34	Washer
27	M5×15L	Screw	79	B-33	Gear Bushing
28	S-40	Snap Ring	80	B-66	Gear Cover
29	A-73	Worm Shaft	81	B-60	Shift Rod
30	A-74	Lock Nut	82	B-63	Gear Shift Fork
31	C-72	Snap Ring	83	B-64	Swing Arm Shaft
32	6910	Ball Bearing	84	B-23	Handle-Knob
33	VS-78	Spacer	85	M5×15L	Hex. Socket Head Bolt
34	VS-79	Spacer	86	TA2620Z	Needle Bearing
35		Spring	87	B-15	Gear
36	VS-75	Flang Ring	88	5×5×6L	Key
37	VS-76	Shim	89	C-35	washer
38	VS-74	Gear	90	M8×15L	Hex. Socket Head Bolt
39	M8	Hex. Socket Head Bolt Base	91	M5	Washer
40		Base	92	B-3	Gear
41	M8	Hex. Sooket Head Bolt	93	B-4	Shaft Sleeve
42	VS-50	Break Box	94	B-9	Worm Gear Shaft
43	560 8M	Time Balt	95	B-5	Worm Bushing
44	A-20	Clutch Shaft	96	M6×6L	Set Screw
45	A-20-1	Spacer	97	B-7	Spacer
46	VS-45-1	Pretension shim	98	B-8	Worm Gear
47	6010ZZ	Ball Bearing	99	B-17	Worm Gear Crodle
48	A-34	Belt	100	B-16	Pin
49	A-19	Pully	101	B-18	Shaft Rod
50	H-182	Handle-knob	102	B-19	Shaft Sleeve
51	H-237	Control Shaft	103	M6×15L	Hex. Socket Head Bolt
52	H-235	Set Bracket	104	B-23	Handle-knob

HU-250 HEAD

S/N	P/N	DESCRIPTION
105	VS-47	Break Ring
106	VS-49	Spring
107	VS-52	Shaft Sleeve
108	VS-53	Control Shaft
109	VS-58	Pin
110	A-34	Handle Lever
111	M6×6L	Set Screw
112	S-8	Snap Ring
113	VS-59	Arm
114	VS-48	Bushing
115	B-92	Worm Gear
116	B-42	Bushing
117	B-43	Worm
118	B-57	Worm Shaft
119	B-47	Spacer
120	B-49	Gear
121	BA78Z	Needle Bearing
122	5×5×8L	Key
123	B-38	Gear Shaft
124	B-40	Gear
125	4×4×45L	Key
126	B-27	Bushing
127	S-24	Snap Ring
128	B-28	Gear
129	B-50	Clutch
130	ϕ4×25L	Spring Pin
131	B-106	Feed Trip Bracket
132	B-113	Handwheel Clutch
133	5×5×15L	Key
134	B-125	Hand Wheel
135	B-126	Handle
136	B-55	Reverse Clutch Rod
137	B-111	Reverse Knob
138	B-110	Bolt
139	B-103	Cam Rod
140	ϕ5×20L	Spring Pin
141	B-104	Trip Handle
142	B-105	Plastic Ball
143	VS-87	Trip Shaft
144	VS-90	Pin
145	VS-89	Control Bloke
146	M4×15L	Hex. Socket Hand Blot
147	VS-92	Control Bloke
148		Spring
149	ϕ3×20L	Spring Pin
150	VS-94	Trip Handle
151	B-99	Arm Cover
152	S-13	Snap Ring
153	B-97	Clutch Washer
154	B-95	Pin
155	B-75	Clutch Ring
156	B-78	Nut
157	B-79	Spring
158	B-80	Clutch
159	B-93	Clutch
160	S-22	Snap Ring
161	B-90	Shaft Bushing
162	B-166	Feed Shaft
163	B-178	Clock Spring
164	B-168	Pin
165	B-177	Spring cover
166	B-176	Hub Sleeve
167	5/16×6L	Set Screw
168		Spring
169	3/16	Stell Ball
170	B-172	Shaft Hub Screw
171	M8×25L	Hex. Socket Head Bolt
172	B-175	Handle Hub
173	B-190	Handdle lever
174	B-191	Plastic Ball
175	B-74	Set Screw
176	M6	Nut
177	M6×25L	Set Screw
178	B-88	Spring
179	B-89	Spring Set Pin
180	B-89-1	Spring
181	B-96	Trip Lever
182	M5×20L	Hex Socket Head Bolt
183	B-103	Cam Rod
184	B-118	Cam Rod Sleeve
185	ϕ3×15L	spring Pin
186	B-159	Micrometer Scale
187		Spring
188	B-121	Pin
189	B-123	Bushing
190	B-124	Pin
191	B-146	Set Screw
192	B-145	Fitting
193	M4	Nut
194	M4×20L	Set Screw
195	B-148	Quill Lock Block
196	B-152	Lock Blot
197	B-153	Quill Lock Block
198	B-149	Lock Handel

HU-250 TOP HOUSING

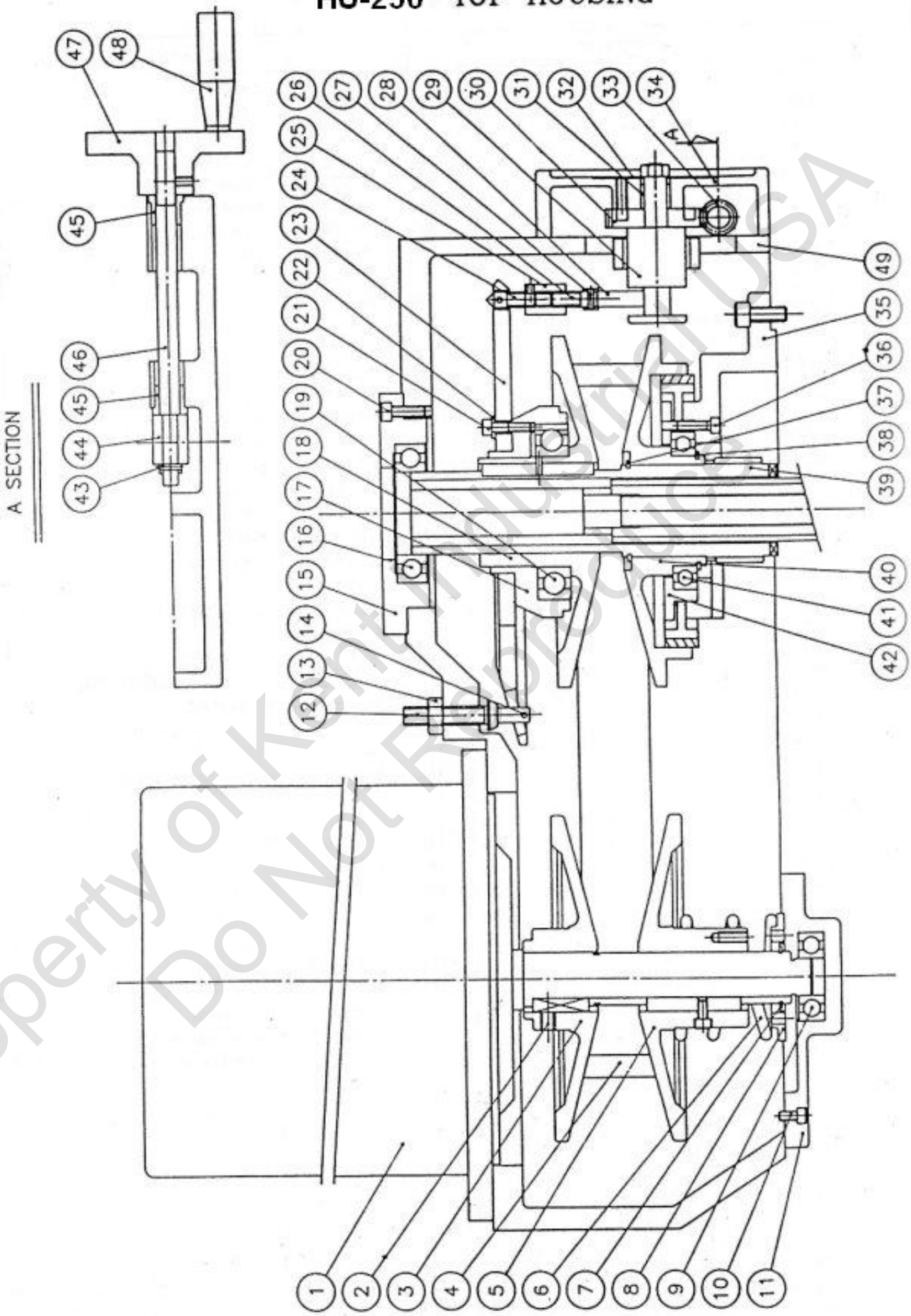

HU-250 TOP HOUSING

S/N	P/N	DESCRIPTION
1	3HP-4P	Motor
2	M8×8L	Set Screw
3	VS-02	Motor Pully
4	(3812915 / 9003830)	Belt
5	VS-03	Motor Pully
6	VS-08	Spring
7	S-28	Snap Ring
8	VS-09	Set Ring
9	#6204	Bearing
10	M5×20L	Hex. Socket Head Blot
11	VS-11	Brake Cap
12	VS-39	Set Screw
13	3/8	Nut
14	ϕ3×25L	Spring Pin
15	VS-13	Bearing Supporter
16	6009ZZ	Ball Bearing
17	VS-42	Bearing Supporter
18	VS-44	Pully
19	6012ZZ	Ball Bearing
20	M6×20L	Hex. Socket Head Blot
21	M5×20L	Hex. Socket Head Blot
22	VS-37	Bushing
23	VS-36	Brake Casting
24	VS-33	Link For Screw
25	VS-34	Link For Bushing
26	VS-35	Union For Chain
27	ϕ4×15L	Spring Pin
28		Link Of Chain
29	VS-29	Body For Chain
30	VS-22	Worm Gear
31	VS-19	Bushing
32		Name Plate
33	VS-21	Worm
34	VS-16	Change Speed Bracket
35	VS-50	Break Box
36	M5×20L	Hex. Socket Headd Blot
37	S-50	Snap Ring
38	S-60	Snap Ring
39	VS-70	Clutch Shaft
40	VS-45	Pully
41	6012ZZ	Ball Bearing
42	VS-46	Bearing Supporter
43	ϕ3×15L	Spring Pin
44	VS-21	Worm
45	VS-24	Bushing
46	VS-25	Conrrol-Bar
47	VS-27	Handwheel
48	VS-28	Handle
49		Puny Case

VERTICAL MILLING ATTACHMENT
HU-250

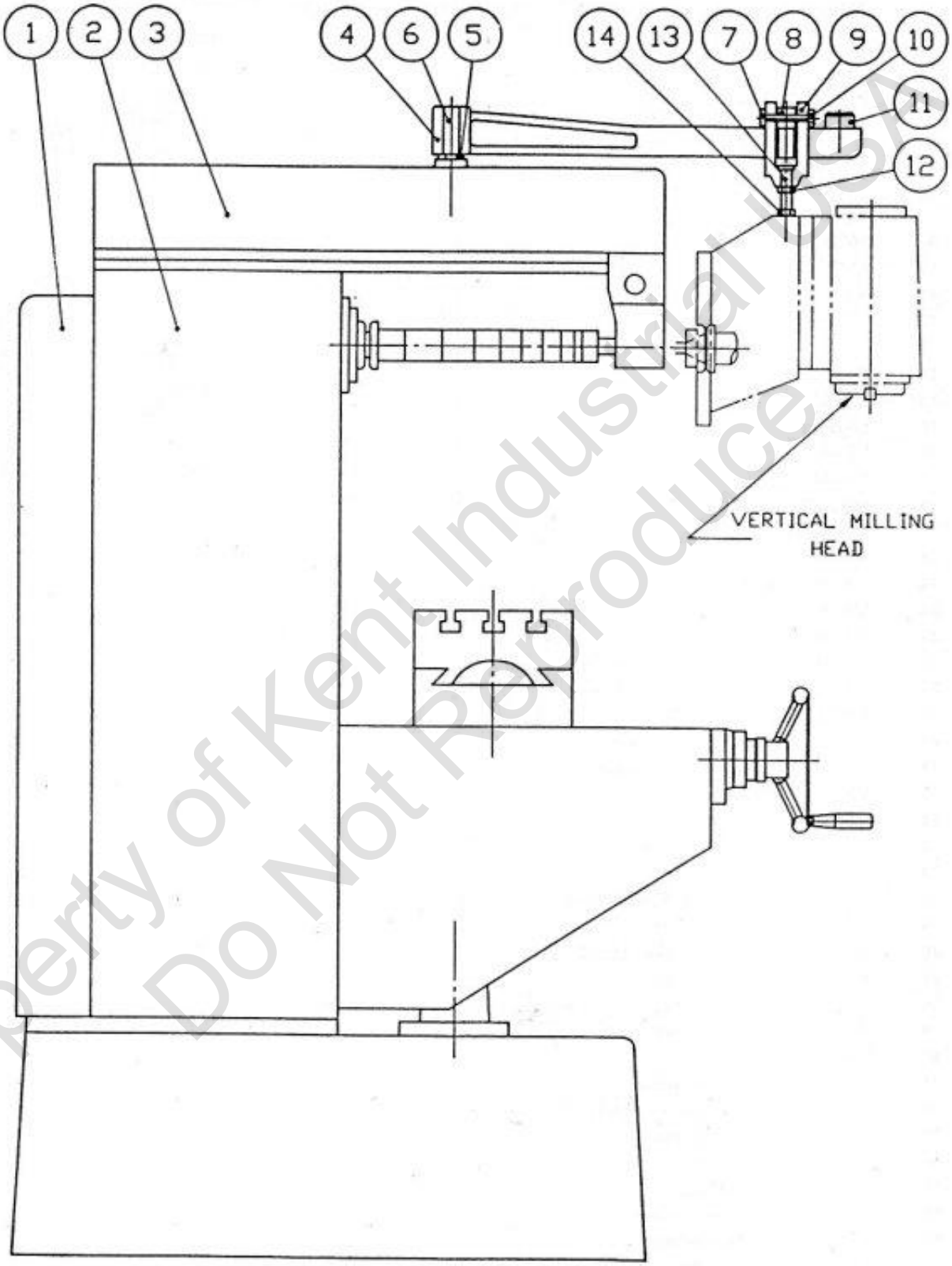

VERTICAL MILLING ATTACHMENT

HU-250

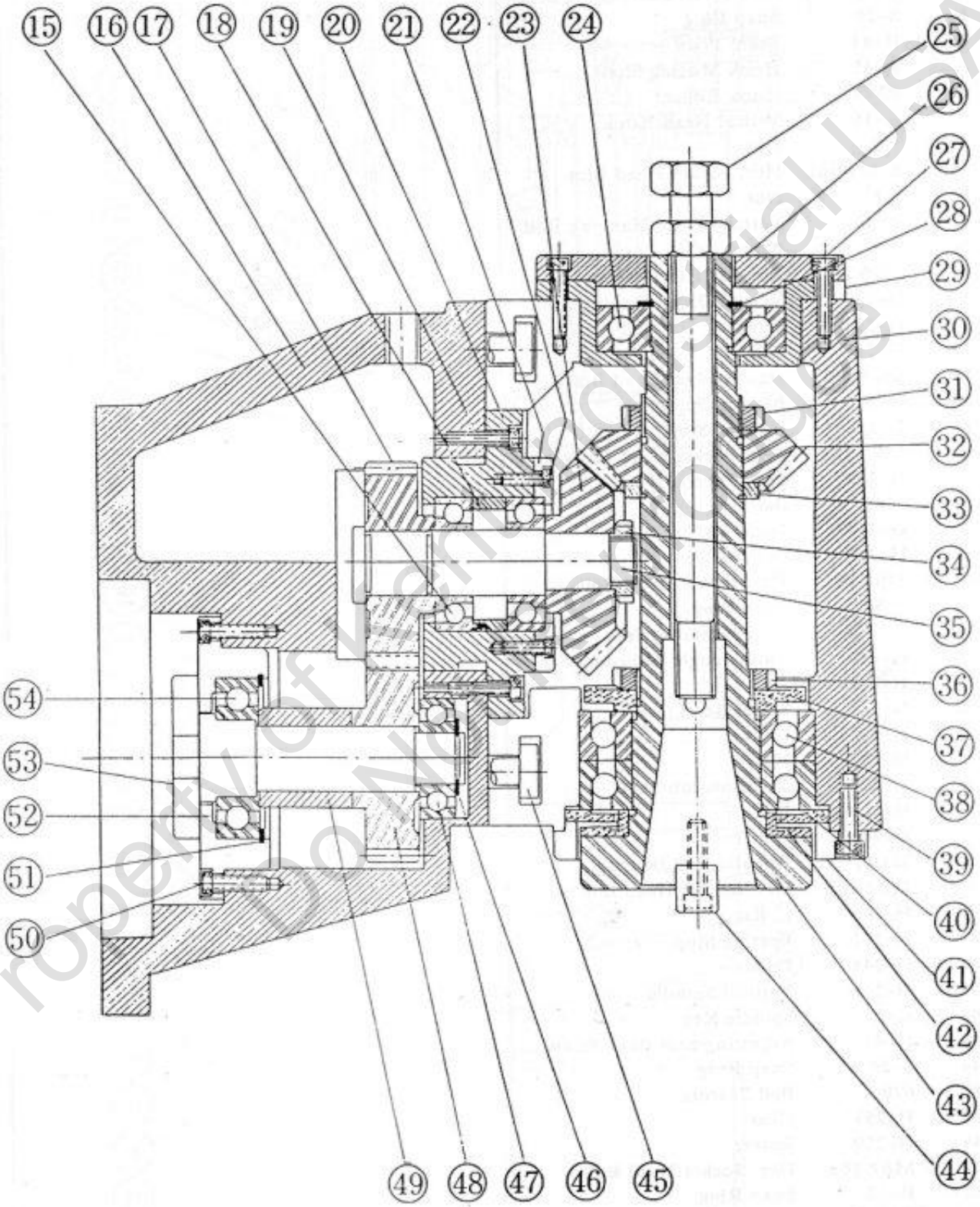

VERTICAL MILLING ATTACHMENT
HU-250

S/N	P/N	DESCRIPTION
1	C-36	puny Case
2	C-60	Column
3	R-38	Arm
4	R-39	Vertical Head Suspension Beam
5	S-25	Snap Ring
6	R-44	Beam Pivot
7	R-45	Hook Moving Shaft
8	R-47	Hook Roller
9	R-45	Vetical Head Hook
10	3/8"	Nut
11	M10×16L	Hex. Socket Head Blot
12	5/8"	Nut
13	R-48	Vertical Head Hanging Bolt
14	1/2"	Nut
15	7205	Angular Ball Bearing
16	H-239	Vertical Head Sething Seat
17	H-253	Gear
18	H-255	Spacer
19	M6×20L	Hex. Socket. Head Bolt
20	H-254	Bearing Supporter
21	H-256	Bearing Stop
22	M5×12L	Hex. Socket Head Bolt
23	H-262	Spiral Berel Gear
24	6306	Ball Bearing
25	H-251	Draw Bar
26	H-250	Bearing Stop
27	M6×20L	Hex. socket Head Bolt
28	S-30	Snap Ring
29	H-249	Upper Bearing Seat
30	H-240	Tilting angle Adjusting Seat
31	H-248	Nut
32	H-261	Spiral Bevel Gear
33	H-247	Collar
34	H-252	Nut
35	H-252	Transmission Shaft
36	H-260	Nut
37	H-246	Collar
38	7210	Angular Ball Bearing
39	M8×16L	Hex. Socket Head Bolt
40	H-245	Collar
41	H-243	Bearing Stop
42	H-244	Collar
43	H-242	Vertical Spindle
44	C-12	Spindle Key
45	H-43	Adjusting Seat fixed Screw
46	S-20	Snap Ring
47	6204	Ball Bearing
48	H-253	Gear
49	H-259	Spacer
50	M6×16	Hex. Socket Head Bolt
51	R-62	Snap Ring
52	H-258	Bearing Supporter
53	H-257	Driving Shaft
54	6206	Ball Bearing

HU-250 SADDLE ASSEMBLY

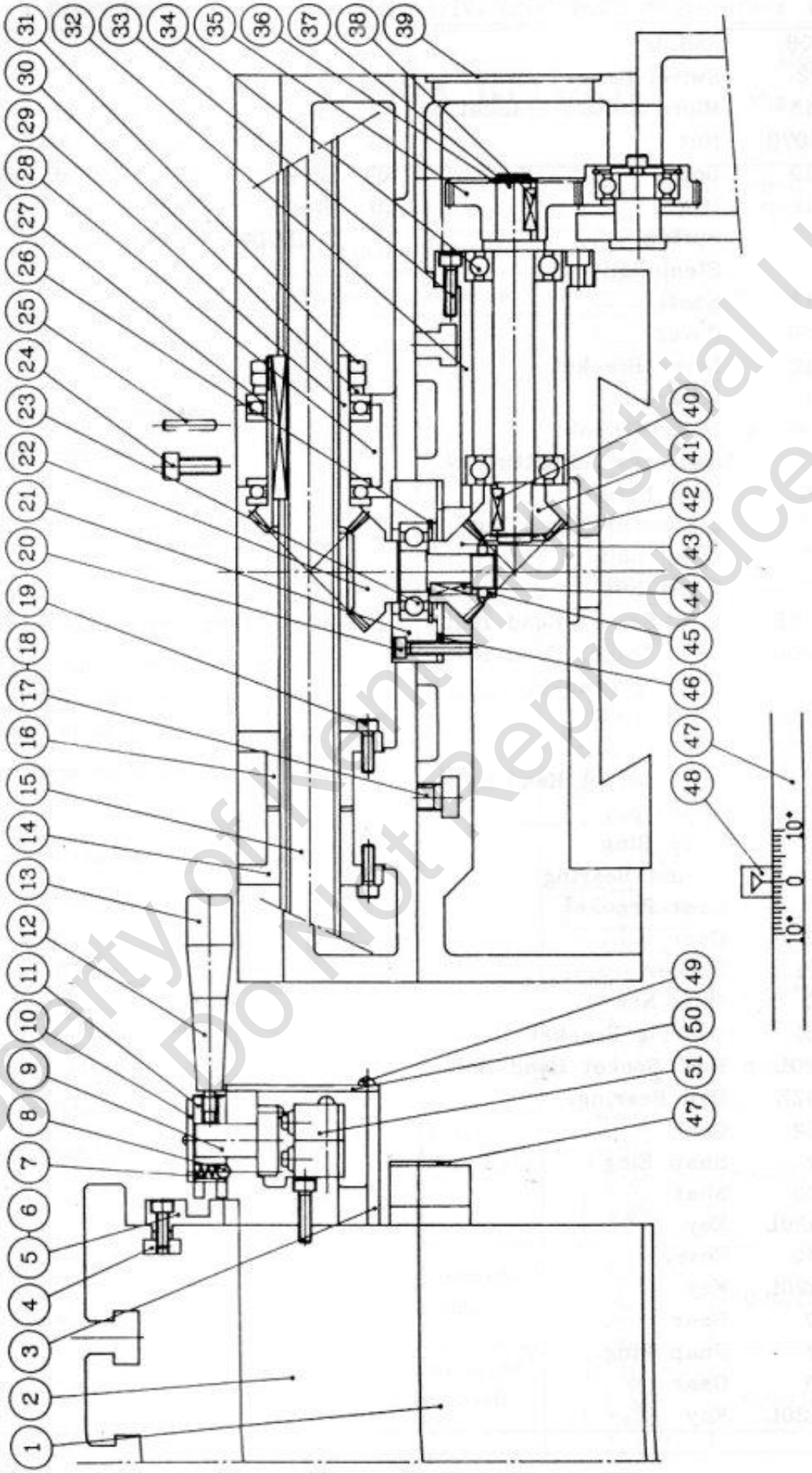

HU-250 SADDLE ASSEMBLY

S/N	P/N	DESCRIPTION
1	S-108	Saddle
2	S-92	Swivel Base
3	S-115	Micro Switch Bracket
4	SP-070	Nut
5	S-110	Dog
6	S-111	Dog
7		Spring
8	1/4	Steel Ball
9	S-114	Shaft
10	S-139	Cover
11	S-112	Lever Bracket
12	S-113	Lever
13	H-178	Handle-Knob
14	T-53	Leadscrew Adjustting Nut
15	T-49	Lead Screw
16	T-52	Leadscrew Fixed Nut
17	H-43	Fixed Bolt
18	1/2"	Fixed Nut
19	M6x25L	Hex. Socket Head Bolt
20	M6x30L	Hex. Socket Head Bolt
21	S-98	Bearing Bracket
22	S-95	Gear Shaft
23	6204ZZ	Ball Bearing
24	M8x25L	Hex. Socket Head Bolt
25	#4x30L	Taper pin
26	H-47	Snap Ring
27	51108	Thrust Bearing
28	S-94	Gear Bracket
29	S-93	Gear
30	S-121	Spacer
31	T-39	Lock Nut
32	S-101	Bearing Bracket
33	M6x20L	Hex. Socket Head Bolt
34	6204ZZ	Ball Bearing
35	S-102	Gear
36	S-17	Snap Ring
37	S-100	Shaft
38	6x6x20L	Key
39	S-140	Cover
40	6x6x20L	Key
41	S-97	Gear
42	S-17	Snap Ring
43	S-96	Gear
44	6x6x20L	Key
45	H-164	Lock Nut
46	S-99	Spacer
47	S-109	Name Plate
48	560H142	Indicator Plate
49	M4x10L	Hex. Socket Head Bolt
50	S-116	Cover
51	Z-15GD-B	Micro Switch

KNEE TYPE HORIZONTAL & UNIVERSAL MILLING MACHINE

INSPECTION RECORD

Model:_____

Mfg. No:_____

Date:_____

No.	Test to be applied		FIG.	Permissible error	Measure value
1	Levelling of work table	In longitudinal direction	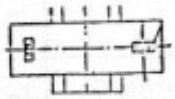	0.06/1000	
		In transverse direction		0.06/1000	
2	Runout of spindle	In radial direction		0.01	
3	Longitudinal movement of spindle nose	In axial direction		0.015	
4	Runout of internal taper	Nearest to spindle nose		0.01	
		At a distance of 300mm		0.02	
5	Surface of work table parallel with its longitudinal movement		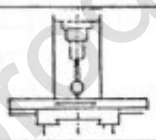	0.03	
6	Surface of work table parallel with its transverse movement		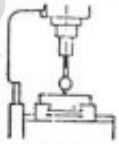	0.02/300	
7	Centre T-slot parallel with longitudinal table movement		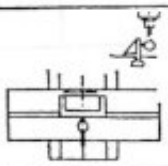	0.03	
8	Centre T-slot parallel with transverse table movement		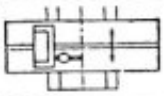	0.02/300	
9	Vertical adjustment of cutter slide square with work table in plane	In longitudinal direction		0.025/300	
		In transverse direction (table rising towar dsthe front side)		0.025/300	
10	Column ways for knee square with work table	Lateral incline towards front and rear side		0.02/300	
		Incline towardsfrontand rear side. respectively		0.02/300	

No.	Test to be applied		FIG.	Permissible error	Measure value
11	Work table square with cutter spindle in plane	Through longitudinal axis(table rising towards the front side only)		0.02/300	
		Perpendicular to that through longitudinal axis		0.02/300	
12	Runout of spindle	In radial direction		0.01	
13	longitudinal movement of spindle nose	In axial direction		0.015	
14	Cutter spindle : Internal taper runs out of truth (use testing bar)	Nearest to the spindle nose		0.01	
		At distance of 300mm		0.02	
15	work table parallel with Cutter spindle	Table rising otwards front side		0.02/300	
16	Transverse movement of table parallel with cutter spindle	In vertical plane		0.02/300	
		In horizontal plane		0.02/300	

DIRECTOR	INSPECTOR	APPROVED BY