LARGE HEAVY DUTY LATHE

Model：MD-47, 55, 63, 70

Operation Manual

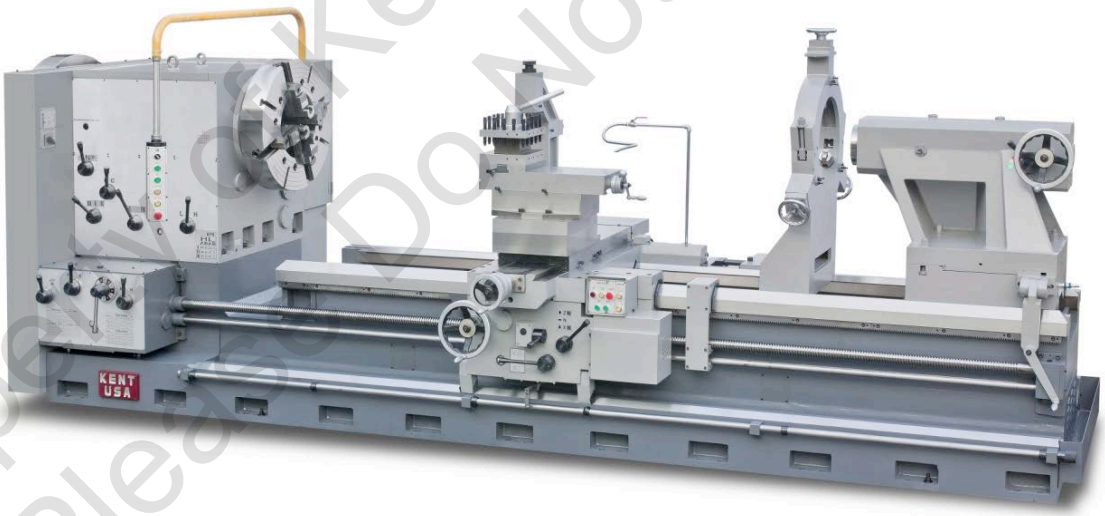

INDEX

CHAPTER 1 SPECIFICATIONS

MODEL / ITEM	47 SERIES	55 SERIES	63 SERIES	70 SERIES	
Center high	600 mm	700 mm	800 mm	900 mm	
Swing over bed	1200 mm(47”)	1400 mm(55”)	1600 mm(63”)	1800 mm(70”)	
Swing over cross slide	830 mm	1030 mm	1230 mm	1430 mm	
Swing over gap	1750 mm	1950 mm	2150 mm	2350 mm	
Width of gap	600 mm				
Width of bed	800 mm				
Distance between centers	2000(80”),3000(120”),4000(160”),5000(200”), 6000(240”),7000(280”),8000(320”),9000(360”)				
Spindle bore	Ø230mm	Ø260mm	Ø310mm	Ø360mm	Ø535mm
Spindle nose	A2-15	A2-15	A2-20	A2-20	A2-28
Number of Spindle speeds	6-400	6-400	5-300	5-300	3-230
Tailstock spindle	Ø200 mm (Ø290mm Rotary Quill Optional)				
Taper of center	MT#7				
Quill travel	300mm				
Cross feeds	0.065-0.96(48Kinds)				
Cross travel	780mm				
Compound rest travel	350mm				
Tool size	50 x 50				
Longitudinal feeds	0.13-1.92 (48Kinds)				
Lead screw diameter	Ø50mm x 2TPI				
Threading range, metric	2-30mm/Pitch (48Kinds)				
Threading range, inch	1-15 TPI (48Kinds)				
Module pitch threads	1-15M (32Kinds)				
DP. Pitch threads	2-30P (48Kinds)				
Main spindle motor	30HP (40HP,50HP Optional)				
Rapid motor	1/2 HP				
Coolant pump	1/4 HP				
Oil pump	12W				

＊ This book consists of all possible options. Your machine might not have some of them.

47”X240”	6000	8620	8870
47”X280”	7000	9620	9870
47”X320”	8000	10620	10870
47”X360”	9000	11620	11870

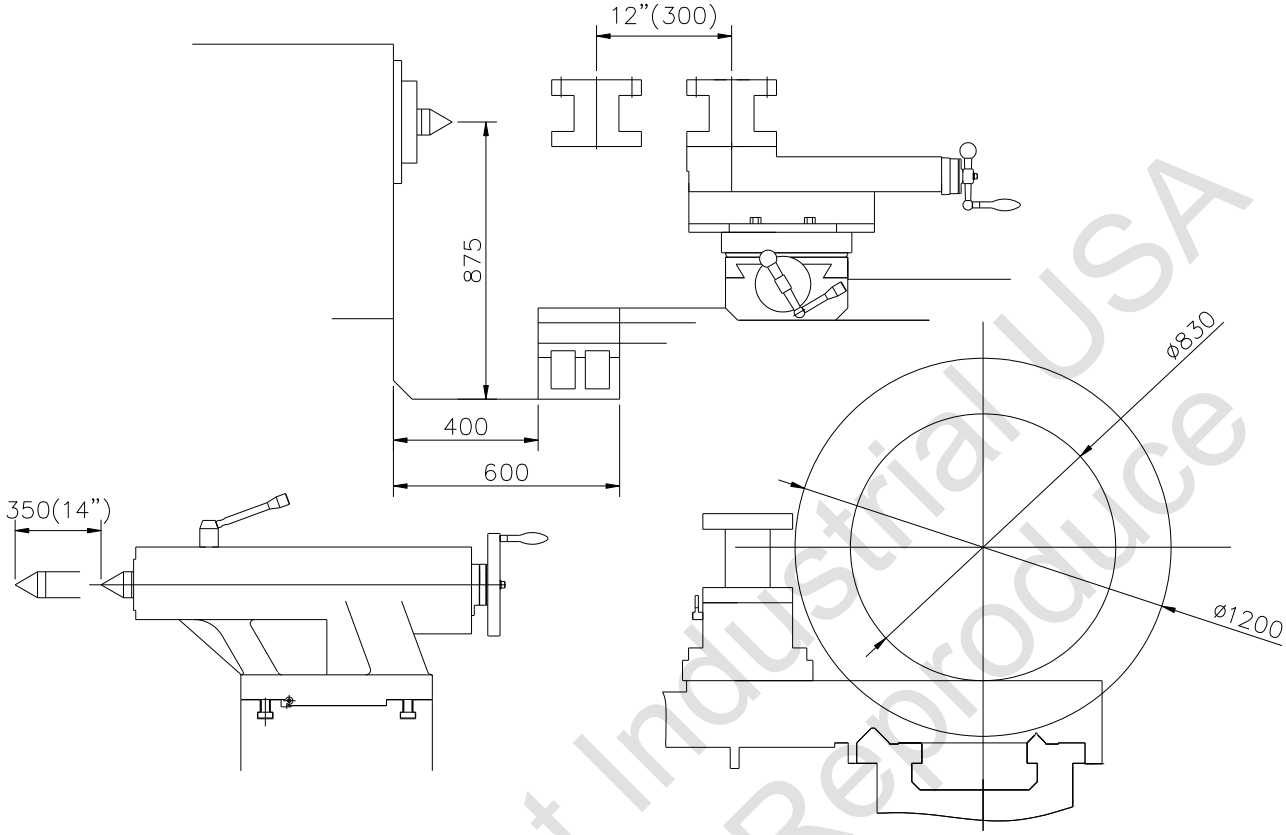

.

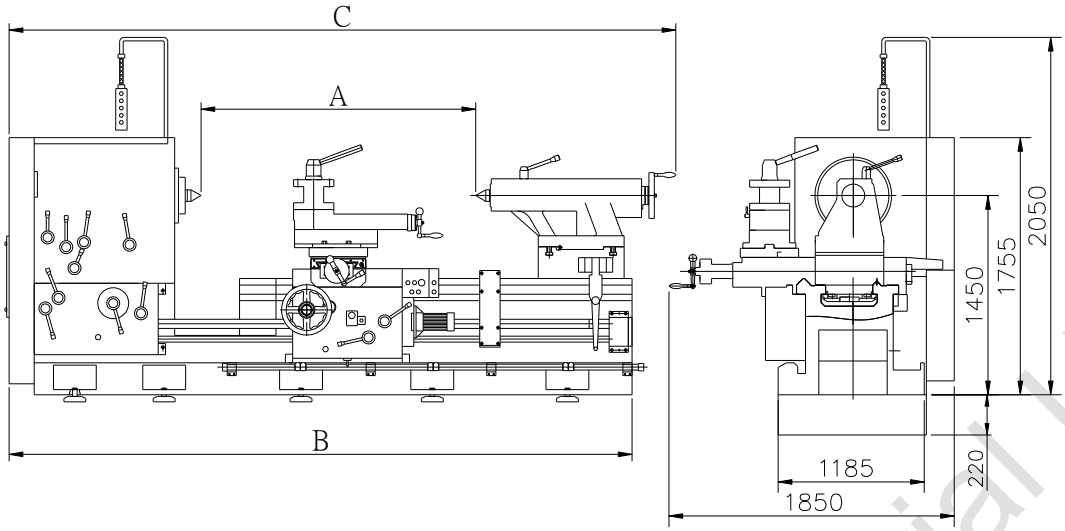

MODEL	A	B	C
55”X80”	2000	4620	4870
55”X120”	3000	5620	5870
55”X160”	4000	6620	6870
55”X200”	5000	7620	7870
55”X240”	6000	8620	8870
55”X280”	7000	9620	9870
55”X320”	8000	10620	10870
55”X360”	9000	11620	11870

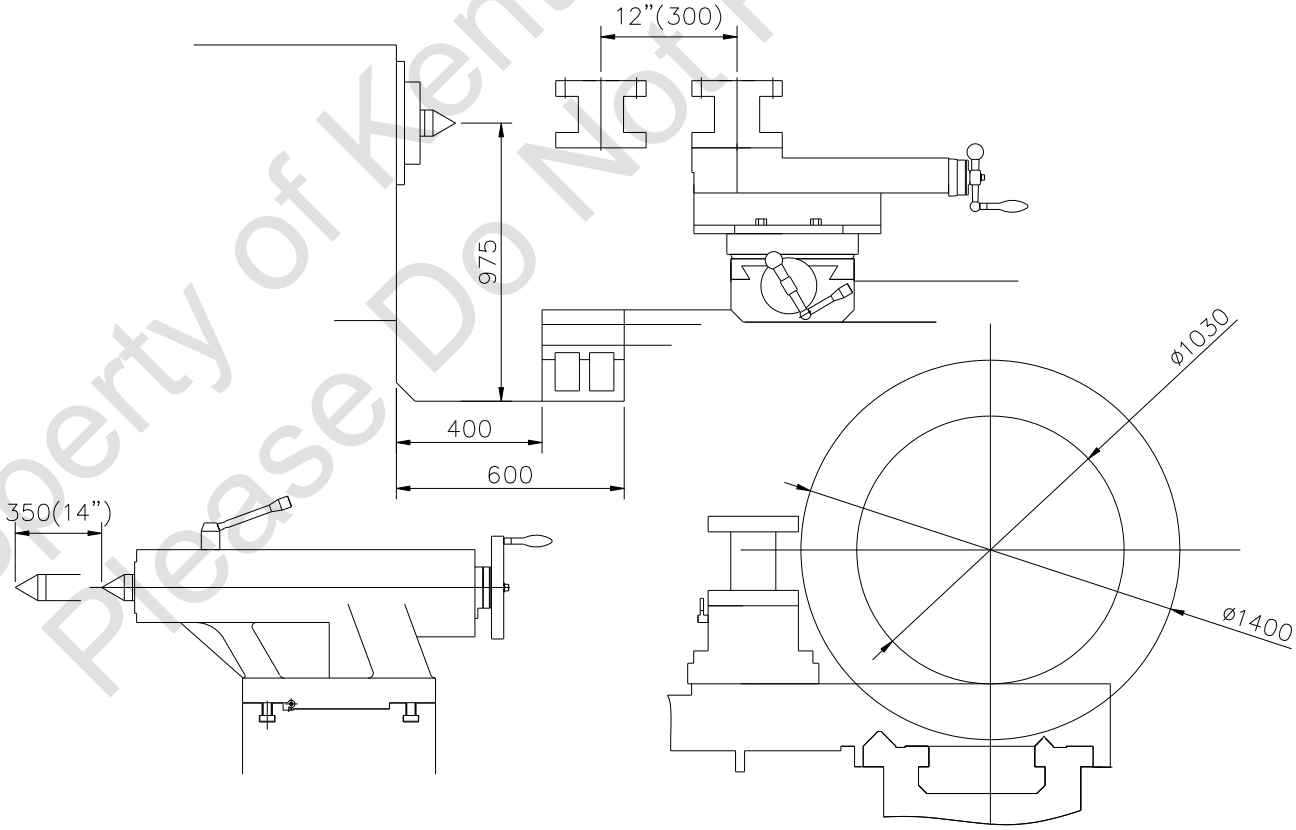

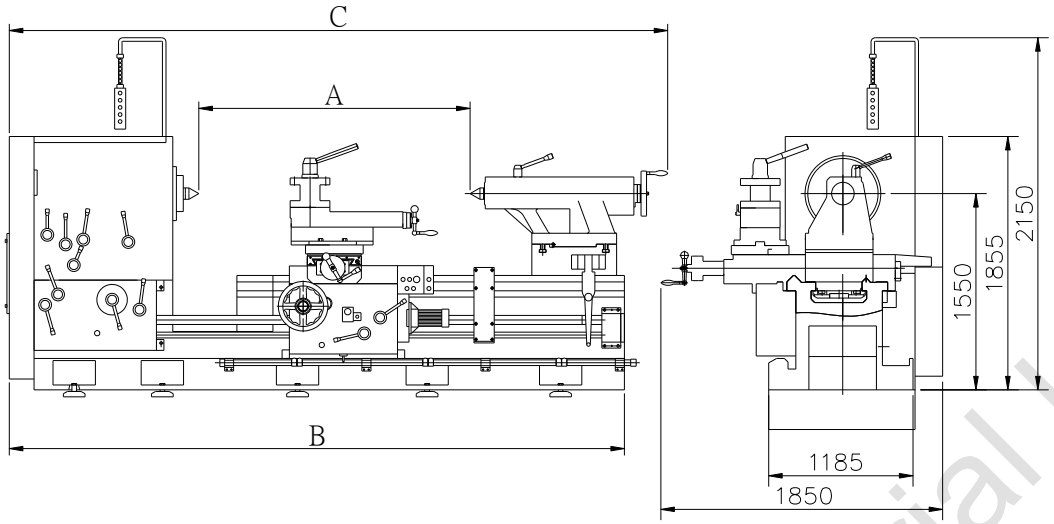

MODEL	A	B	C
63”X80”	2000	4620	4870
63”X120”	3000	5620	5870
63”X160”	4000	6620	6870
63”X200”	5000	7620	7870
63”X240”	6000	8620	8870
63”X280”	7000	9620	9870
63”X320”	8000	10620	10870
63”X360”	9000	11620	11870

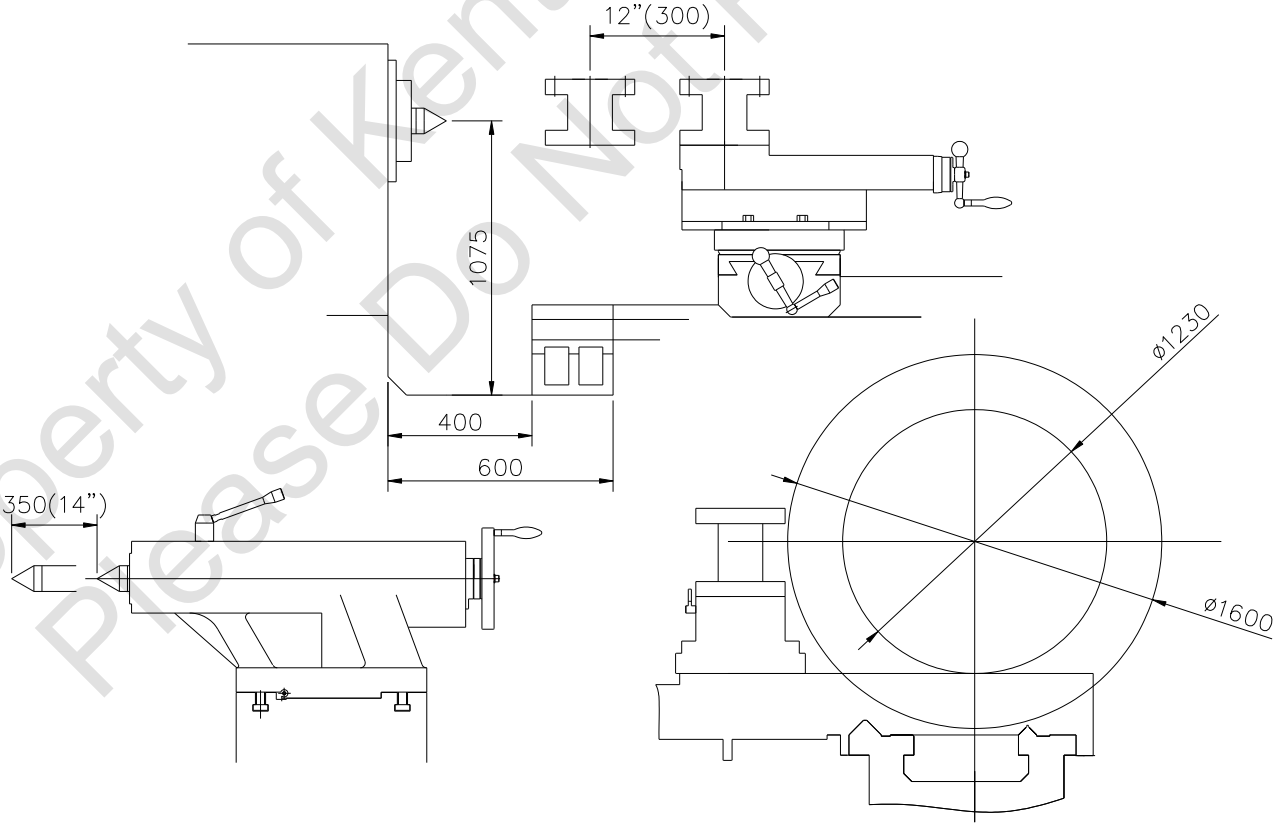

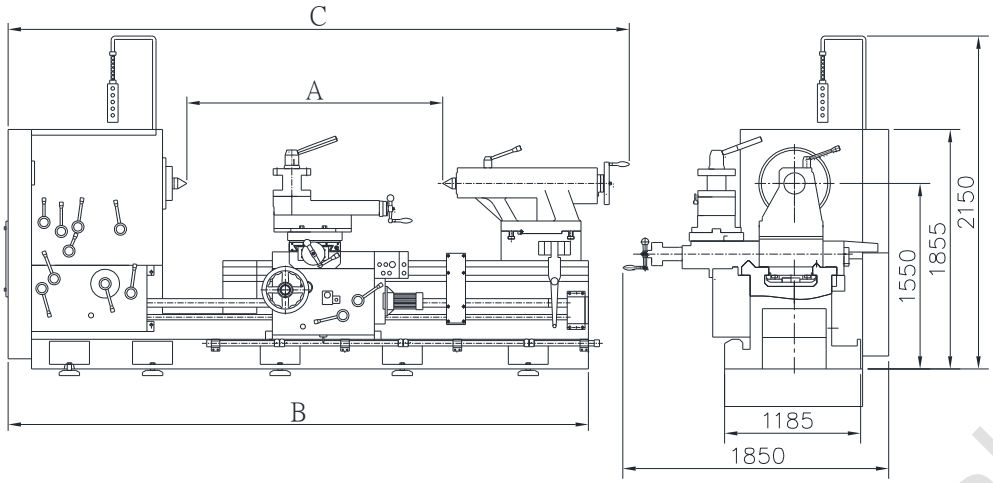

MODEL	A	B	C
70"X80"	2000	4620	4870
70"X120"	3000	5620	5870
70"X160"	4000	6620	6870
70"X200"	5000	7620	7870
70"X240"	6000	8620	8870
70"X280"	7000	9620	9870
70"X320"	8000	10620	10870
70"X360"	9000	11620	11870
70"X400"	10000	12620	12870

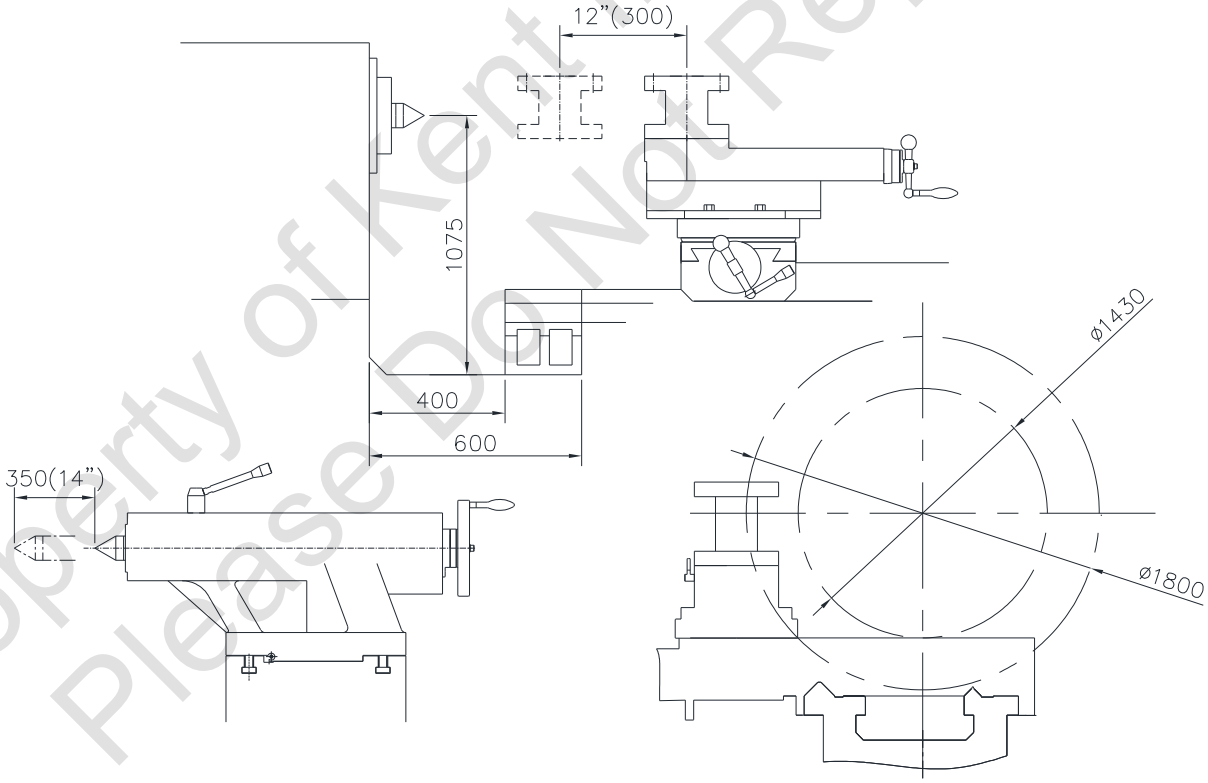

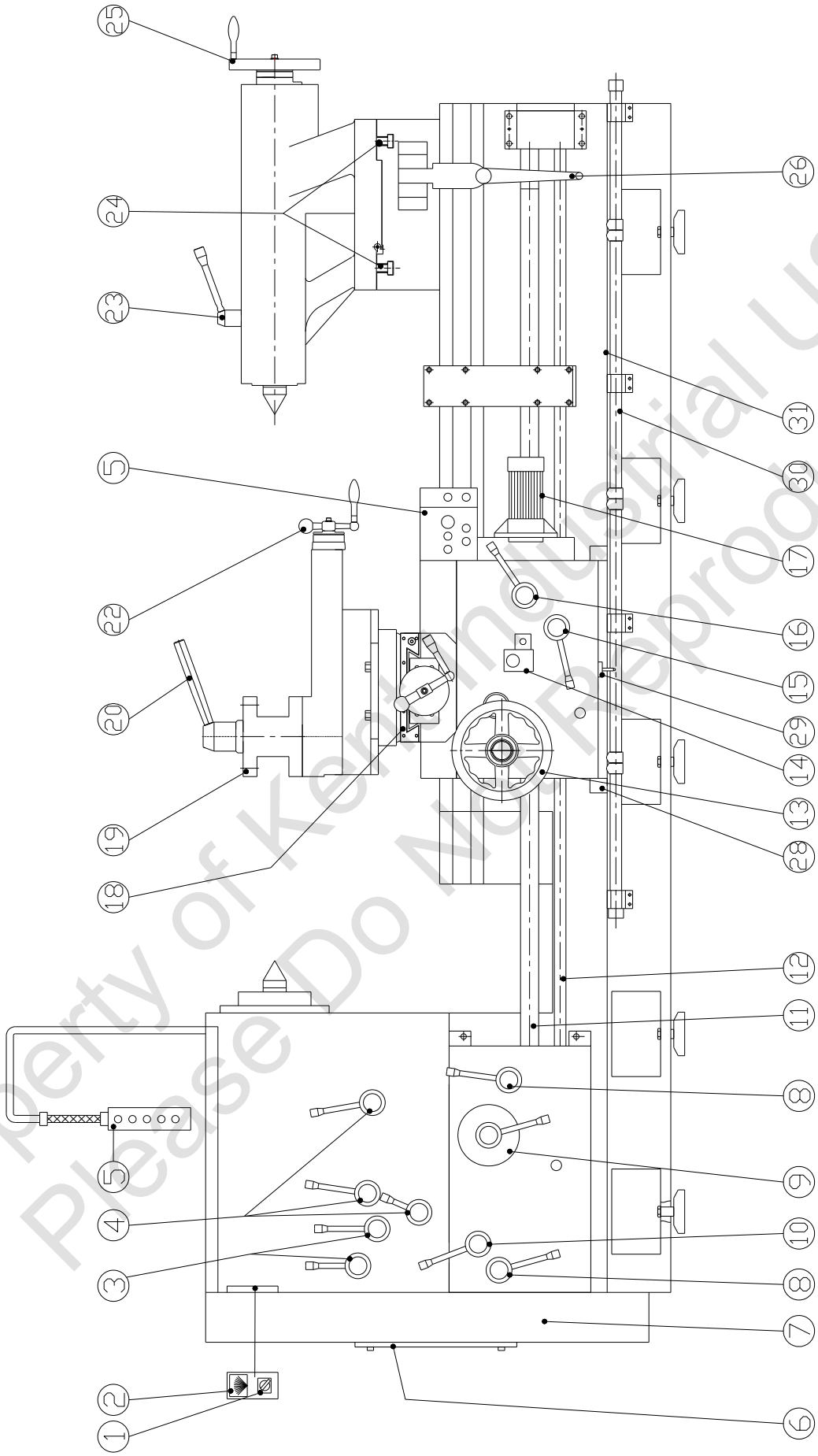

ITEM	DESCRIPTION
1.	POWER SOURCE
2.	AMP METER
3.	FEED DIRECTTION SELECT ROD
4.	SPEED CHANGE ROD
5.	OPERATOR BOTTOMS
6.	CHANG GEAR
7.	FEED SPEED CHANGE ROD
8.	METRIC-INCH THREADING SELECT ROD
9.	12 STEPS SPEED SELECT ROD
10.	FEED SPEED CHANGE ROD
11.	LEAD SCREW
12.	FEED ROD
13.	LOG-FEED HANDLE WHEEL
14.	LOG-CROSS CHANGE ROD
15.	RAPID FEED CHANGE ROD
16.	HALF NUT ROD
17.	RAPID MOTOR
18.	CROSS FEED HANDLE WHELL
19.	TOOL POST SCREW
20.	TOOL POST CLAMPING ROD
21.	LOCKING SCREW
22.	COMPOUND TOOL POST HANDLE WHELL
23.	TAILSTOCK QUILL LOCKING ROD
24.	TAILSTOCK QUILL LOCKING SCREW
25.	TAILSTOCK HANDLE WHEEL
26.	BRACKET FOR MOVING TALLSTOCK
27.	FEED-THREAD SELECT LEVER
28.	SADDLE THIRD SUPPOBTER
29.	AUTO-FEED STOPPER
30.	AUTO-FEED STOP ROD
31.	THE THIRD GRINDING SUPPORTER SLID

CHAPTER 2 INSTALLATION

2.1 UNPACKING

Inspect the machine. If there is any shortage or damage, contact your local dealer immediately.

2.2 MOVING & LIFTING

Move &lift the machine by using a 1 1/2” diameter and 32” long iron bar. Go through the hole of left leg. And lift unpacking machine with a wire rope, which have enough capacity against gross weight of chine, as the method shown in the figure, raising and lowering the machine should be careful. Do not to hump the machine against the floor. Before moving please check the following items:

(1) Clamp Tailstock
(2) Lock saddle lock
(3) Engage half nut with lead screw

2.3 FOUNDATION WORK

At present, the super-hard alloy tools are used for high speed lathe. The cutting speed and the spindle speed are much higher then before. An incomplete foundation is apt to produce vibration. Since super-hard tool is Easily influenced by the vibration, the foundation work should be done as the figure shown. Enough space and boundary are necessary. The machine should be installed at least 2 ft. from the wall and other machines.

2.4 CLEAN UP

Anticorrosive is applied on the machine. For cleaning up the bed, slides, and lead screw, etc, use dissoluble solvent to take off the anticorrosive. Do not use lacquer thinner or gasoline. Apply machine oil to all the necessary positions. Check all the handles and levers to see if it is functioning properly. Then set on neutral position

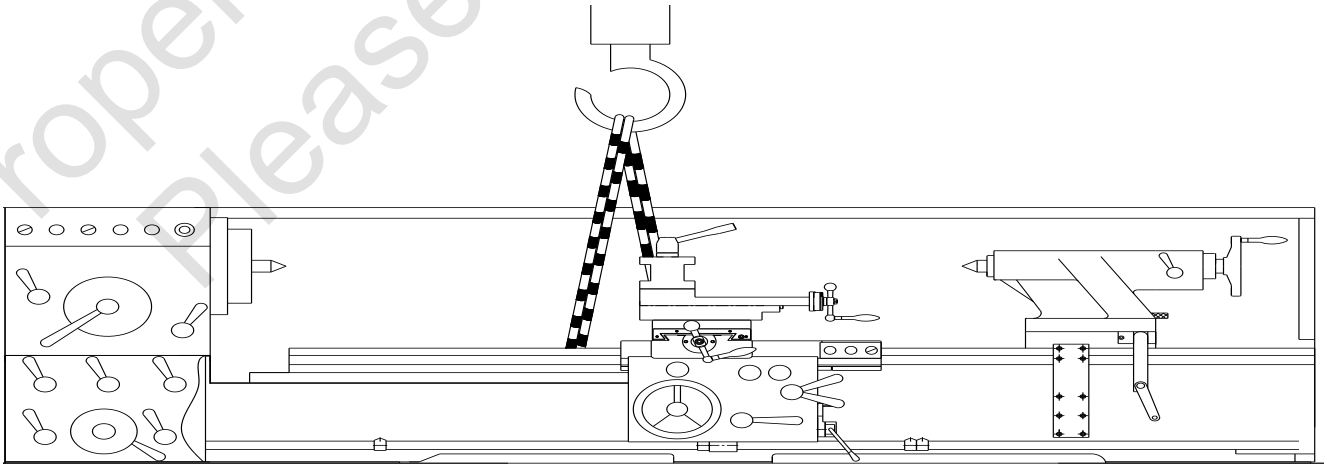

2.5FOUNDATION

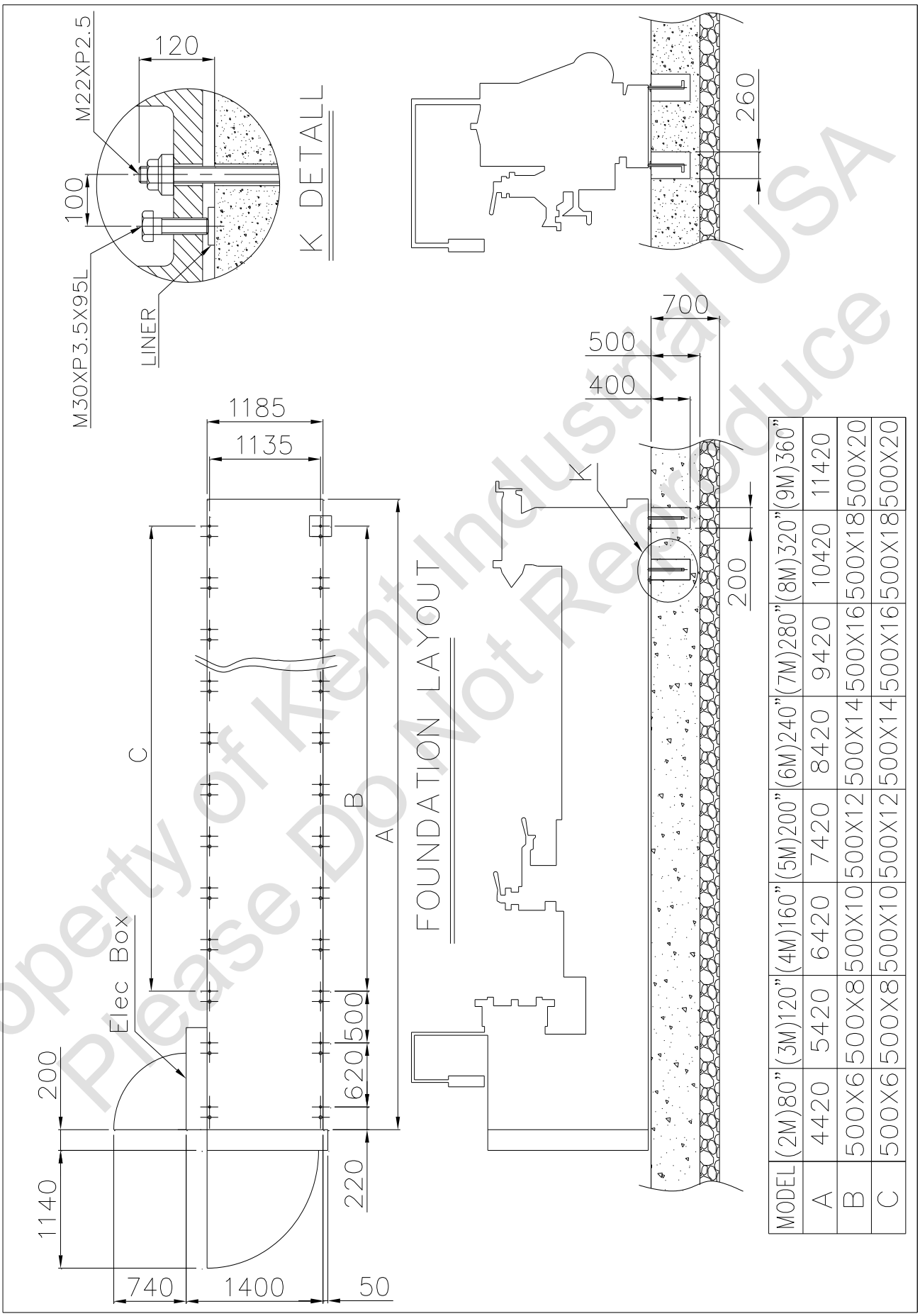

MODEL	(2M)80"	(3M)120"	(4M)160"	(5M)200"	(6M)240"	(7M)280"	(8M)320"	(9M)360"
A	4420	5420	6420	7420	8420	9420	10420	11420
B	500X6	500X8	500X10	500X12	500X14	500X16	500X18	500X20
C	500X6	500X8	500X10	500X12	500X14	500X16	500X18	500X20

2.6 LEVEL OF LATHE

Anchor bolts and installation blocks must be fixed steadily to the cement. For alignment of the machine, place spirit level which has sensitivity better than 0.02mm/1000mm, on guide ways of bed, adjust the level of the bed-way from left to right, then adjust the level of saddle, both front and rear, make sure the sensitivity is within 0.04mm/1000mm.

After the adjustment of level, fast the nuts if flatness is deviated by fastening Nuts, adjust it again until no deviation is found.

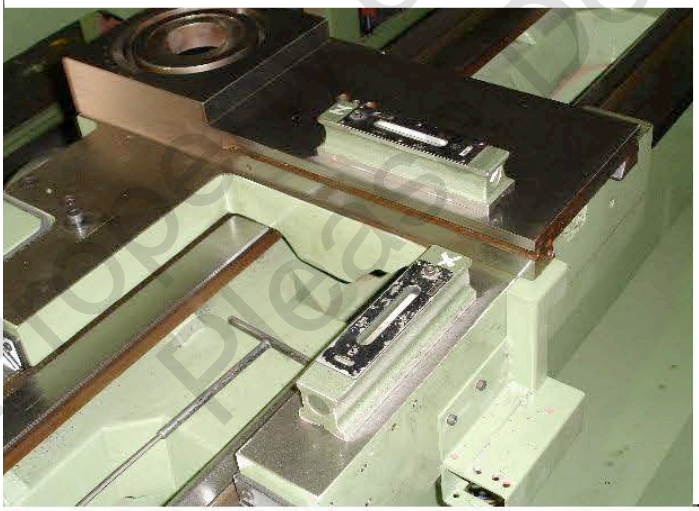

CHAPTER 3 POWER SECURITY CONTROL

3.1 ELECTRICAL BOX

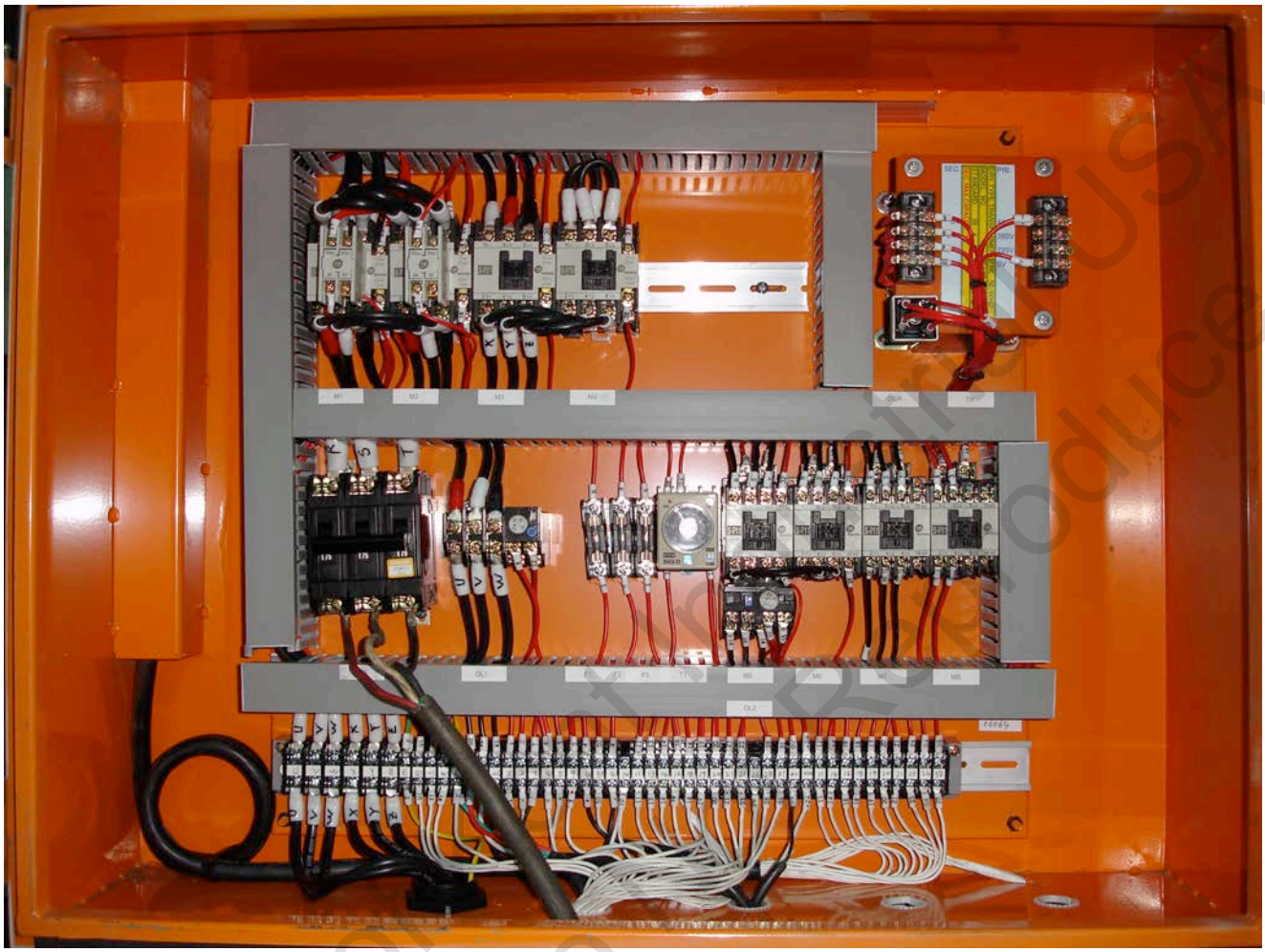

3.2 ELECTRICAL SAFETY FEATURES

(1)The control panel of this machine is equipped with magnetic contactor and overload thermal realy.
(2)Forward/reverse lever and limited microswitch are connected.
(3)Pedal brake device is connected to limited microswitch.
(4)There is jogging switch push botton in top of headstock.

3.3 CAUTION

After wiring, check the spindle rotating direction. Turn on the power source switch and push the jogging switch button.

If it rotates counterclockwise, it is the correct wiring. If not, replace two of the three wires (R.S.T). then check the rotation again.

The overload thermal relay is connected to the magnetic contactor to protect from motor overload. If the spindle speed drops to zero during normal operation, but the pilot light is still on, it indicates that the overload thermal relay and restart the machine.

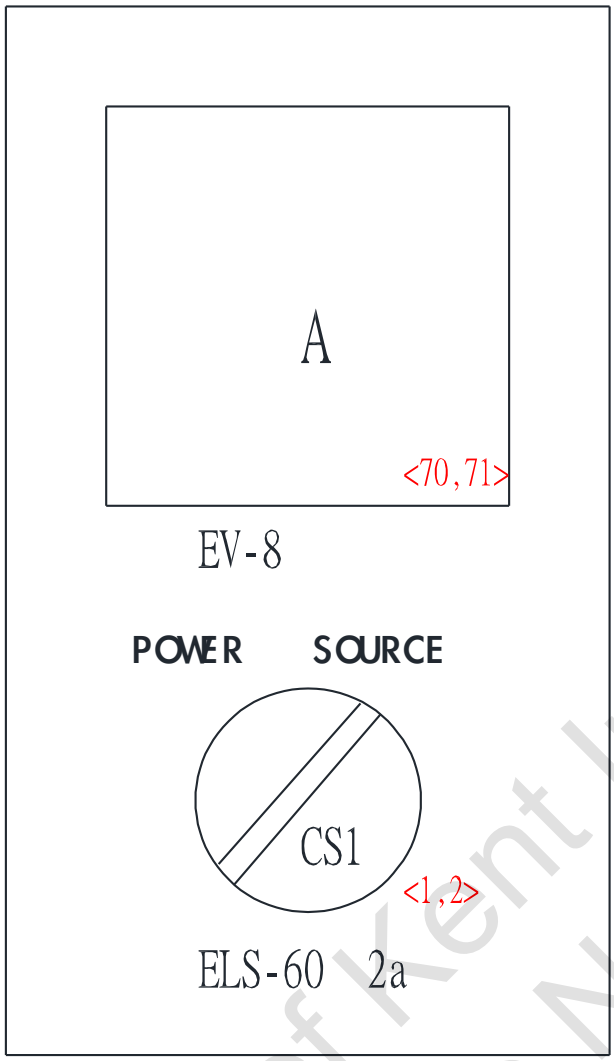

Label : 1, 2, 70, 71

Cable Size : 1.25mm* 4c

Wiring :

(1) Male plugs in control box

(2) Cable with 1.25-3Y plugs in electric cabinet

(3) Cable with female plugs in control box

(4) Length 3.3M

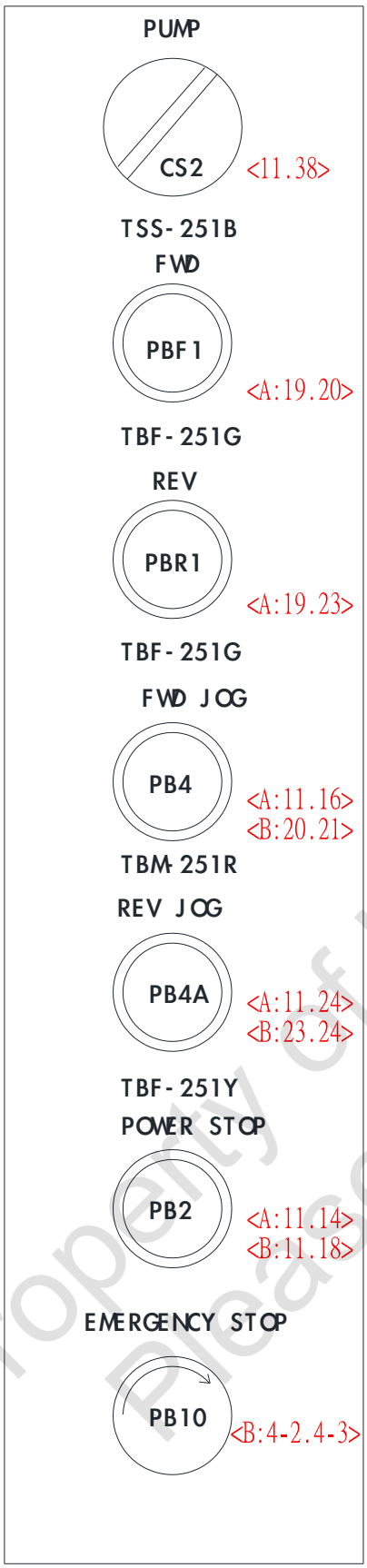

Label :4-2.4-3.11.14.16.18.19.20.23.24.38.

Cable Size : 0.75mm* 16c

Wring :

(1) Male plugs in control box

(2) Cable with 1.25-3Y plugs in electric cabinet

(3) Cable with female plugs in control box

(4) Length 3.7M

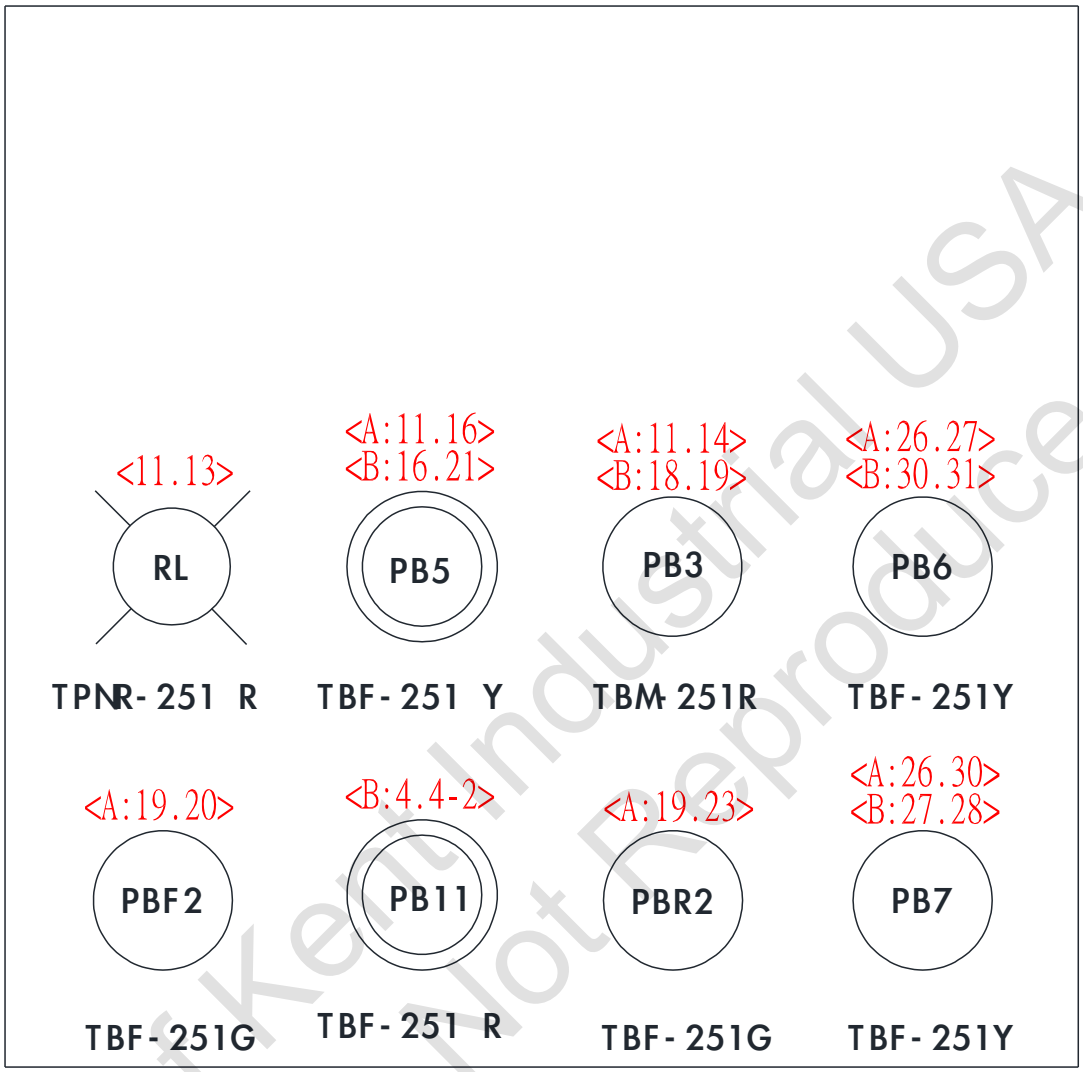

Label：4.4-2.11.13.14.16.18.19.20.
21.23.26.28.31.

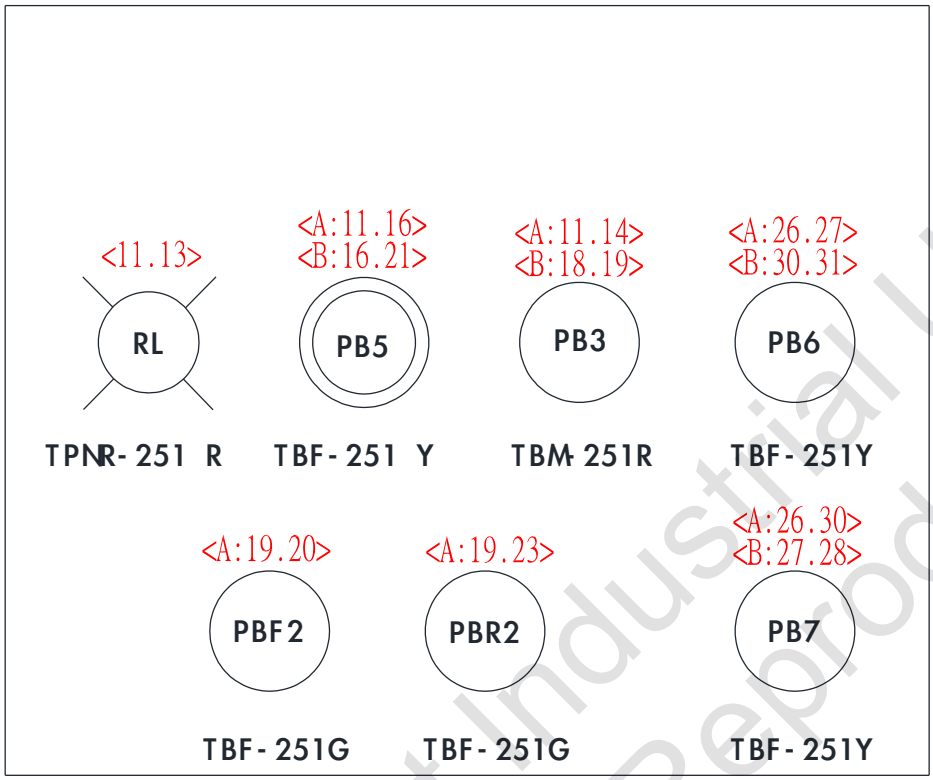

Label：11.13.14.16.18.19.20.21.23.26..28.31

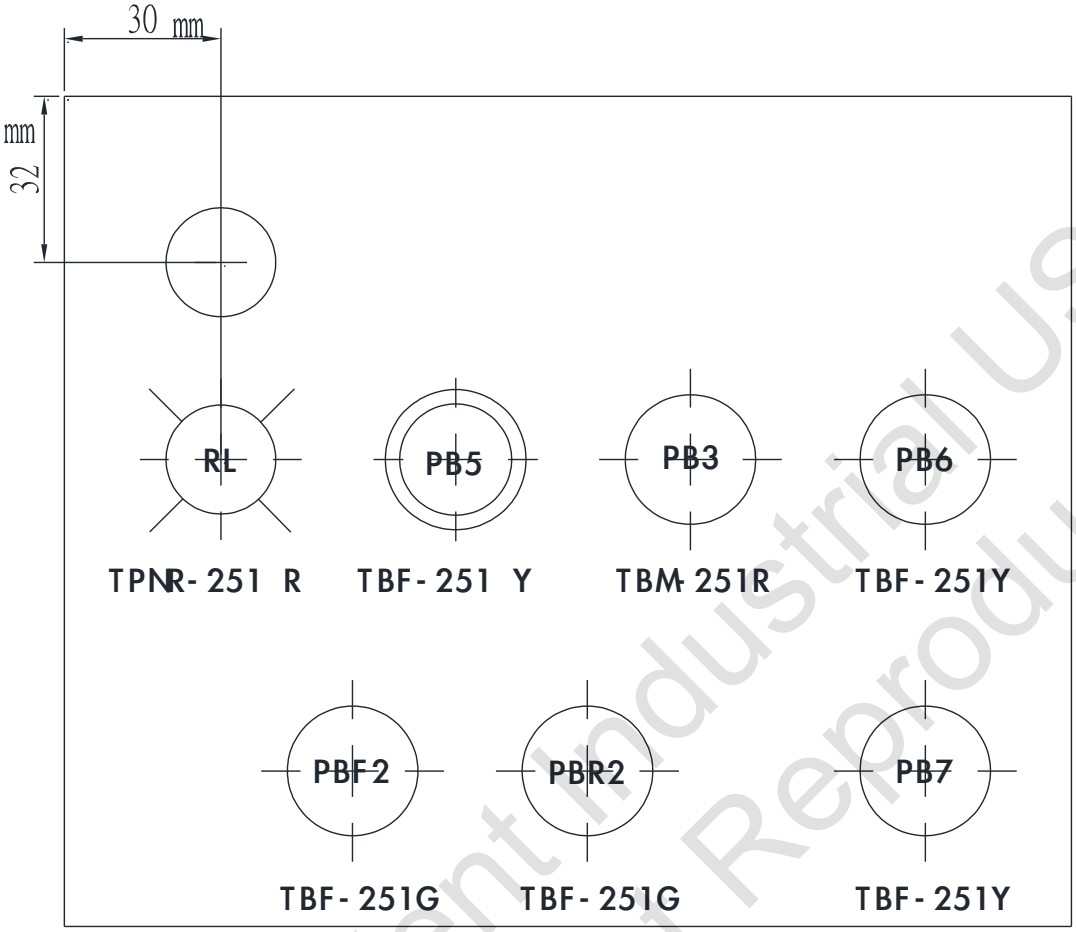

Label：11.13.14.16.18.19.20.21.23.26..28.31

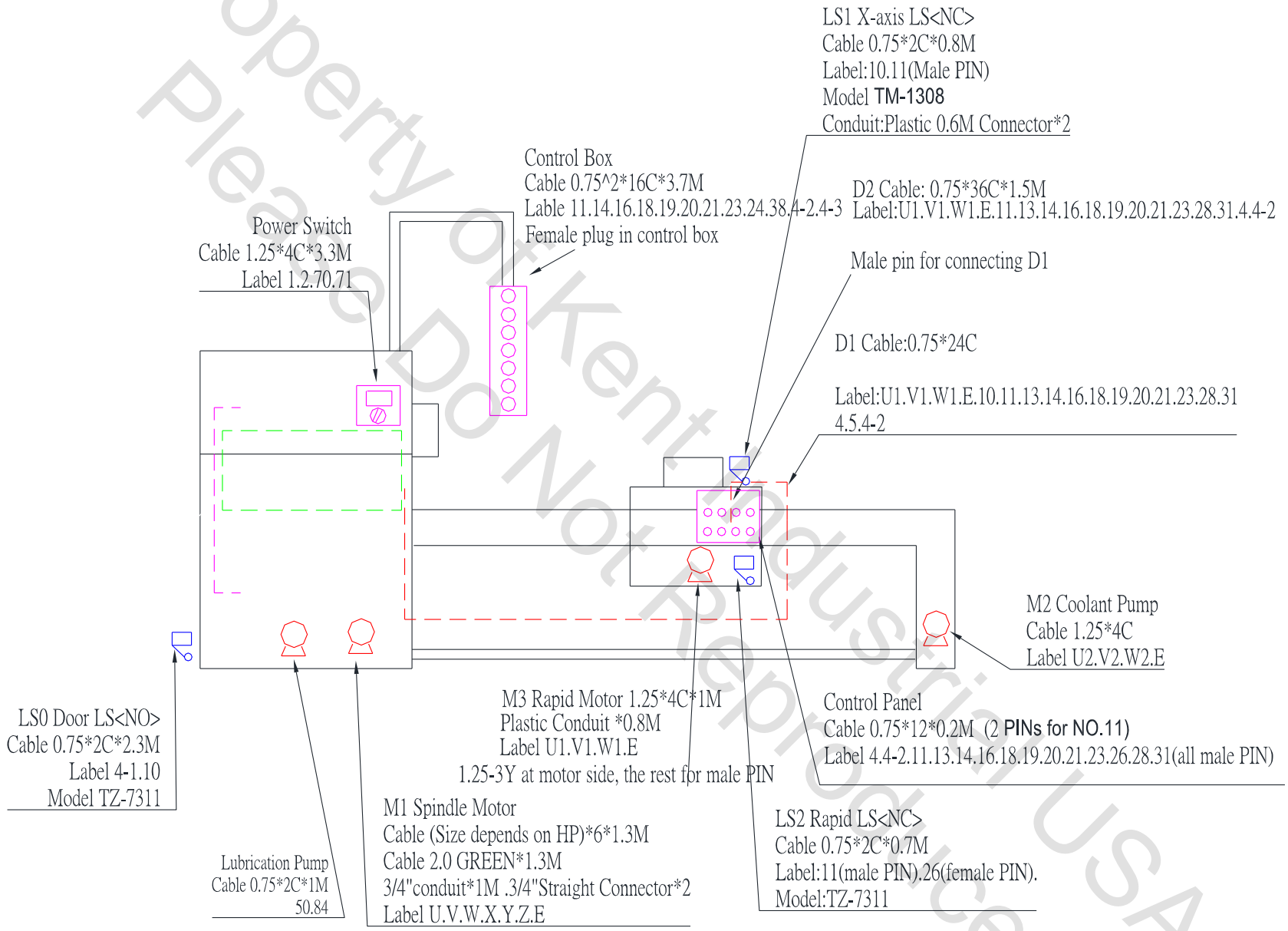

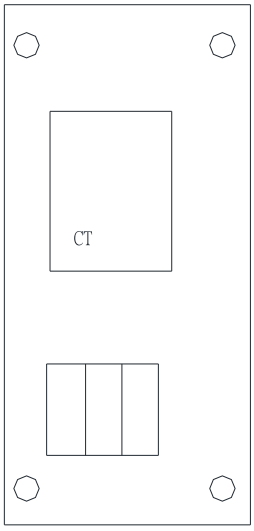

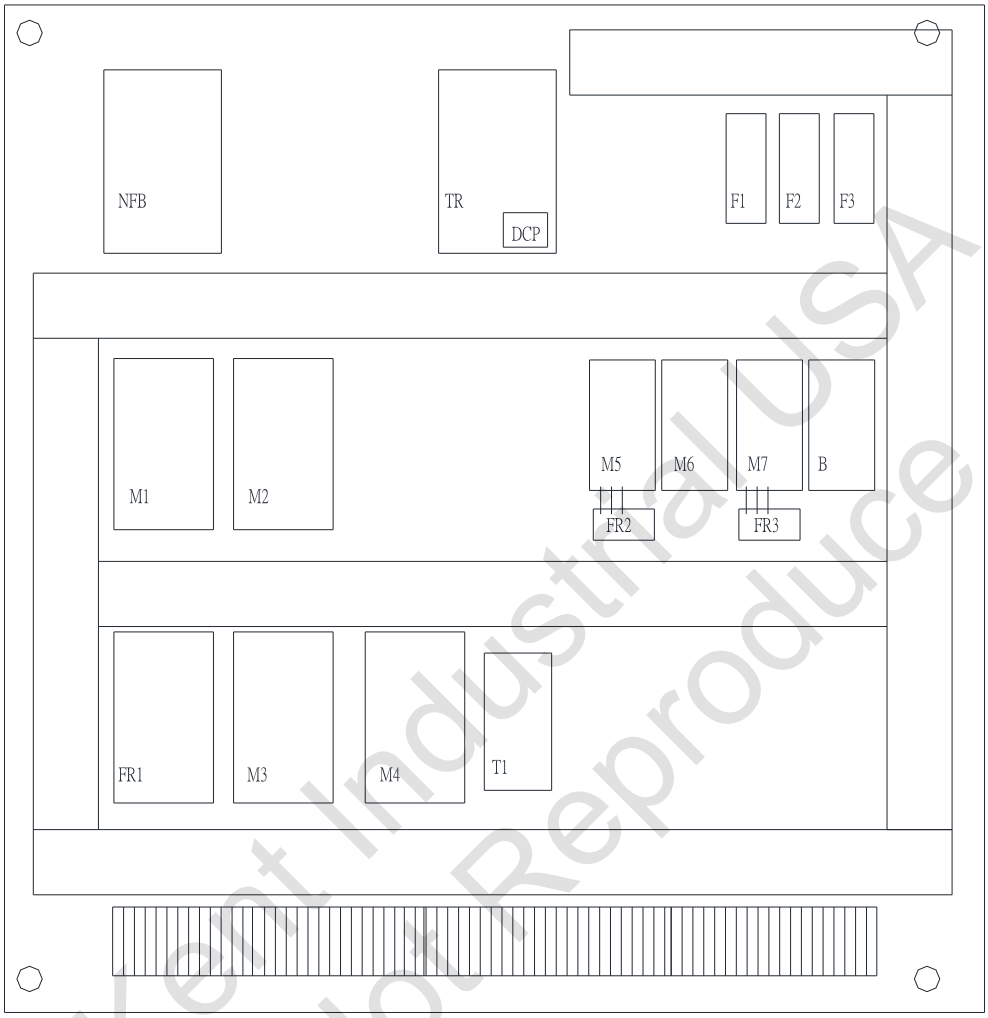

CHAPTER 4 PREPARATION FOR OPERATION

4.1 SPINDLE ROTATION, STOP AND RESTART

(1) Turn on power source switch ①

(2) Set lever ③ at neutral position (middle Position).

(3) Set the spindle speed lever ④ to the needed speed. Then set ⑤⑥ High/Low speed control lever to either high or low position speed chart shown in Table-1.

(4) Push Forward/Reverse control switch㉜ to get to forward or reverse revolution.

(5) To stop the spindle rotation by pushing brake: button㊲

(6) To restart the spindle rotation, use the same Forward/Reverse control switch as before you stop.

CAUTIONS!!

(1) Stop spindle rotation before changing spindle speed. Otherwise, the headstock gear will be damaged.

(2) If it is hard to set the lever on position when change the speed, push the jogging switch ㊱ then set the change gear lever again.

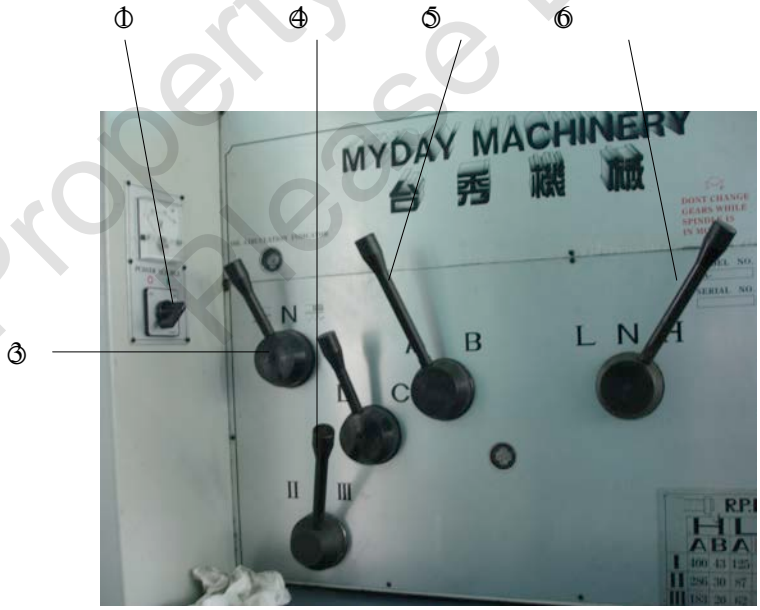

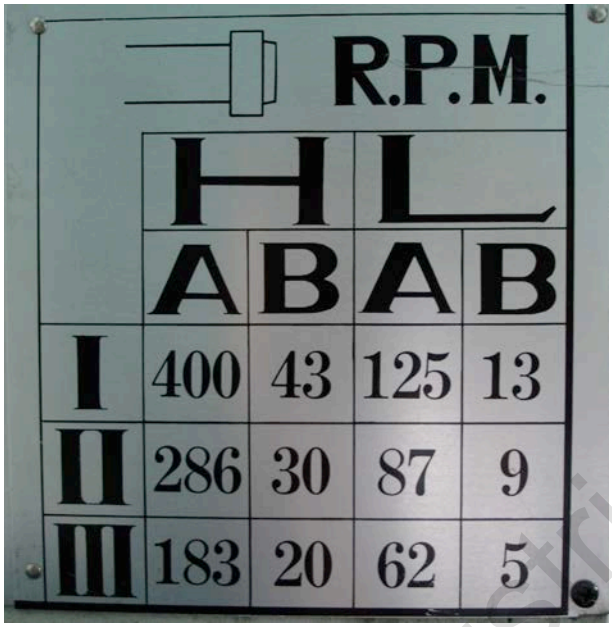

R.P.M.				
	H		L	
	A	B	A	B
I	400	43	125	13
II	286	30	87	9
III	183	20	62	5

Table-1

4.2 OPERATION OF JOGGING SWITCH PUSH BUTTON

There is a push button 36 in top of headstock (see Fig. 7). Push it slightly. The spindle will run positively and stop automatically. This is for changing speed easier and adjusting the center for raw material when a 4-jaw chuck is used.

4.3 CHANGE GEAR SYSTEM

The change gear system is located at the left side of the headstock. Please refer to thread cutting chart, table 2, be sure that the gears are aligned after you have changed them.
Caution: Don't attempt to change gears While spindle is rotating.

TABLE-2,THREAD CUT

W INCH THREAD

LEVERS		1	2	3	4	5	6	7	8	9	10	11	12
F	C	1	$1\frac{1}{8}$		$1\frac{1}{4}$	$1\frac{3}{8}$		$1\frac{1}{2}$				$1\frac{3}{4}$	
	D	2	$2\frac{1}{4}$	$2\frac{3}{8}$	$2\frac{1}{2}$	$2\frac{3}{4}$	$2\frac{7}{8}$	3	$3\frac{1}{8}$	$3\frac{1}{4}$	$3\frac{3}{8}$	$3\frac{1}{2}$	$3\frac{3}{4}$
E	C	4	$4\frac{1}{2}$	$4\frac{3}{4}$	5	$5\frac{1}{2}$	$5\frac{3}{4}$	6	$6\frac{1}{4}$	$6\frac{1}{2}$	$6\frac{3}{4}$	7	$7\frac{1}{2}$
	D	8	9	$9\frac{1}{2}$	10	11	$11\frac{1}{2}$	12	$12\frac{1}{2}$	13	$13\frac{1}{2}$	14	15

LEVERS		1
F	C	2
	D	4
E	C	8
	D	16

M METRIC THREAD

LEVERS		1	2	3	4	5	6	7	8	9	10	11	12
F	C	16	18	19	20	22	23	24	25	26	27	28	30
	D	8	9	9.5	10	11	11.5	12	12.5	13	13.5	14	15
E	C	4	4.5	4.75	5	5.5	5.75	6	6.25	6.5	6.75	7	7.5
	D	2	2.25		2.5	2.75		3		3.25		3.5	3.75

LEVERS		M 1
F	C	8
	D	4
E	C	2
	D	1

TABLE-

FEED SPEED

LEVERS		FEED SPEED (INCH)											
		1	2	3	4	5	6	7	8	9	10	11	12
F	C	0.039	0.044	0.047	0.050	0.054	0.057	0.060	0.065	0.067	0.069	0.072	0.076
	D	0.020	0.022	0.024	0.025	0.027	0.028	0.030	0.032	0.033	0.035	0.036	0.038
E	C	0.010	0.011	0.012	0.013	0.013	0.014	0.015	0.016	0.017	0.017	0.018	0.019
	D	0.005	0.005	0.006	0.006	0.007	0.007	0.007	0.008	0.008	0.009	0.009	0.010

LEVERS		FEED SPEED (METRIC)											
		1	2	3	4	5	6	7	8	9	10	11	12
F	C	1.00	1.12	1.20	1.26	1.38	1.44	1.52	1.64	1.70	1.76	1.84	1.92
	D	0.50	0.56	0.60	0.63	0.69	0.72	0.76	0.82	0.85	0.88	0.92	0.96
E	C	0.25	0.28	0.30	0.32	0.34	0.36	0.38	0.41	0.43	0.44	0.46	0.48
	D	0.13	0.13	0.15	0.16	0.17	0.17	0.19	0.20	0.20	0.22	0.22	0.24

TABLE-2-1

4.3.1 RAPID TRAVEL:

Please must confirm below two points before operating rapid travel.

POINTS:

1. SELECT X OR Z AXIS RAPID TRAVEL: Pull up the lever 14 to get longitudinal (Z) rapid travel, pull down lever to get cross (X) rapid travel.
2. SELECT DIRECTION: Select switch 34 or 35.
3. If you don't continuous to push 34 or 35 then, the rapid travel will be stopped.

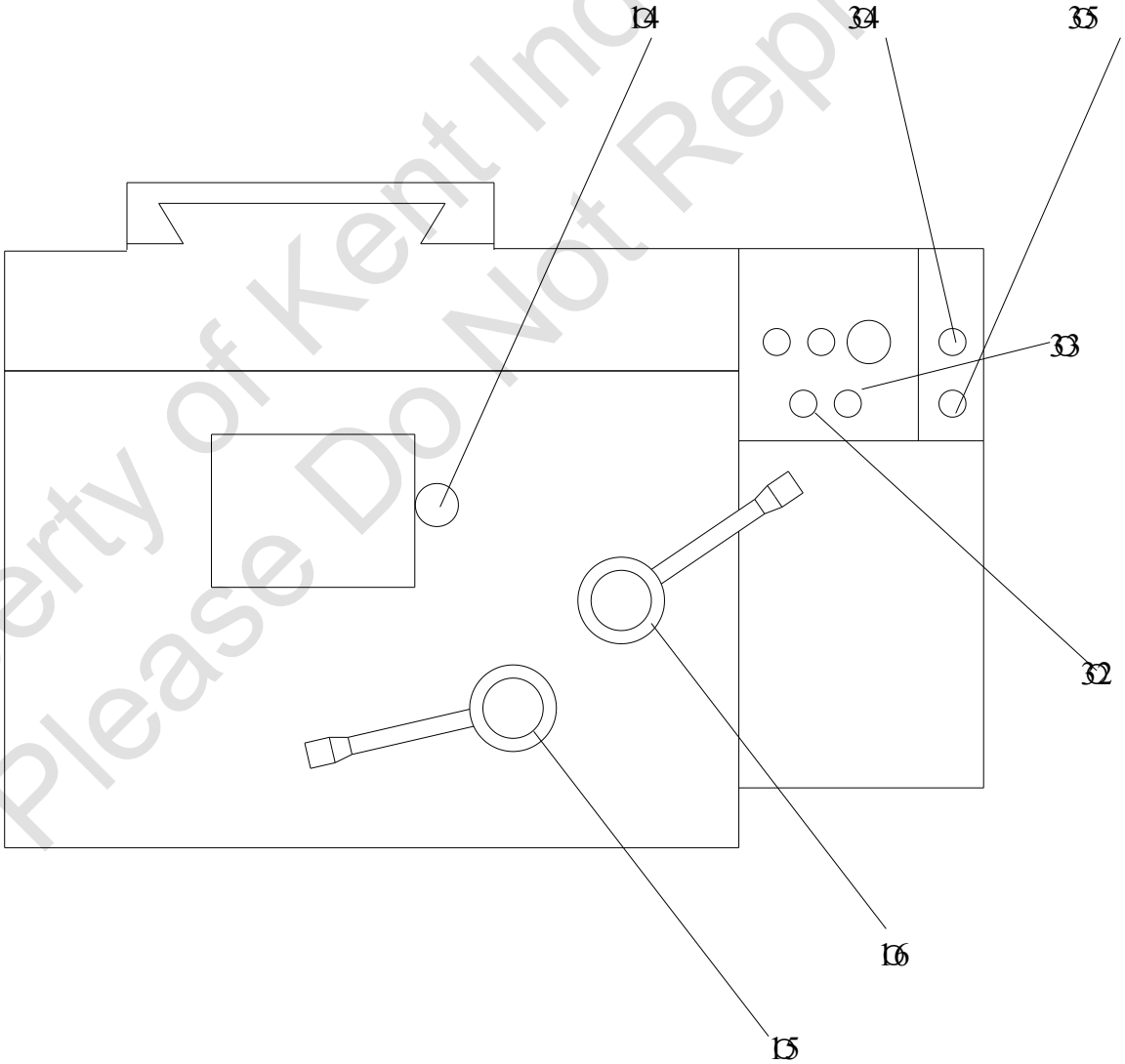

Threading Indicator：

The threading indicator is installed on the side of apron.

A. When the lathe with inch lead screw, the threading indicator is set 8 teeth gear, then it can suit various proper points to threading cutting. As chart –5–1

B. When the lathe with metric lead screw, the threading indicator is set 12 teeth gear, but it need more kinds of worm gear to suit various proper points to threading cutting

As table–3

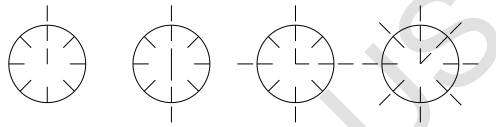

chart –5–1

Threading indication table：

PH	T	POINT	PH	T	POINT
2.5	10	2	3.25	13	1
5			6.5		
10			13		
20			26		
2.75	11	1	3.5	14	2
5.5			7		
11			14		
22			28		
2.0	12	4	2.25	12	4
3.0			4.5		
4.0			9.0		
6.0			18		
8.0					
12.0	12	2			
16.0					
32.0					

table–3

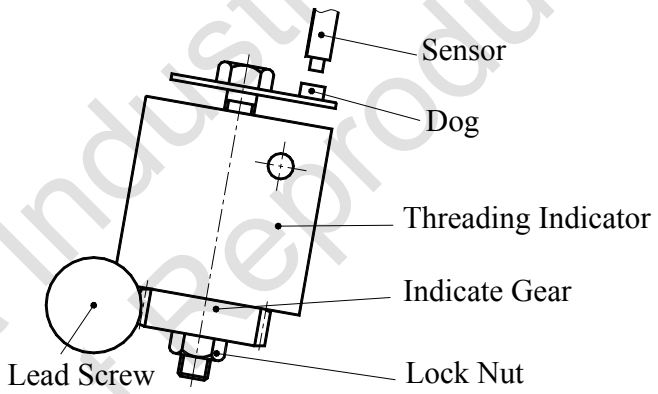

chart –3

Change Steps：

1. According Table 6-1 to select out the indicate gear.
2. Turn the hand wheel until sensor catch the dog, the air cylinder will close the half nut automatically.
3. Take apart the locking nut to change the indicate gear.

Change Steps of Cutting Metric / Inch Threading：

A. When the lead screw is metric：

1. Cut metric thread, must change indicate gear (The lever of half nut can open) cycle threading.
2. Cut inch thread, The lever of half nut must close, use positive and negative turning of main spindle to back and forth threading.

B. When the lead screw is inch：

1. Cut inch thread, must change indicate gear, (The lever of half nut can open) cycle threading.
2. Cut metric thread, The lever of half nut must close, use positive and negative turning of main spindle to back and forth threading.

4.4 MANUAL, FEED

Carriage moves longitudinally by turning Hand wheel 13 (Be sure to let lever 15 at up position and pull levers 16 up)
Cross feed operated by handle wheel 18

4.5 AUTOMATIC FEED

Automatic feed is operated as billows

(1) Choose feed direction by lever 3
(2) Set change gears and shift levers 8 & 9 & 10 to desired feed value.
(3) Pull lever 16 up.
(4) Feed selector 14 to select either longitudinal feed or cross feed.
(5) Push switch 32 to select direction of spindle rotation.
(6) Automatic feed starts when 15 lever is operated and stop when it is pulled up to neutral position.

4.6 SWIVEL SLIDE

Loosen four cap screws before swiveling it.

4.7 TAILSTOCK

Tailstock spindle moves out by turning hand wheel 25 either the arbor of drill Chuck or tailstock spindle center comes out by excess returning of tailstock spindle. Tailstock spindle. Tailstock spindle is clamped by pushing lever 23 counter direction. The tailstock clamped by 4 screws 24.

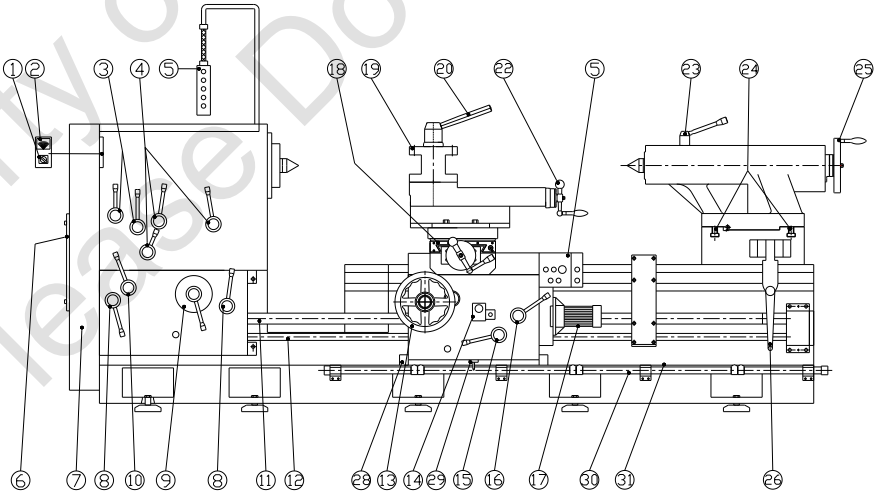

CHAPTER 5 THREADING

5.1 LEADSCREW OPERATION

Shift the lever ㉓ to the right or left, the leadscrew run forward or reverse rotation respectively.

5.2 THREAD SYSTEM

The thread cutting is operated as follow :
(1) The change gears are aligned according to PAGE 10.
(2) Lever Position: Please refer thread Cutting chart table 2.
(3) Shift lever ㉜ to select direction of spindle rotation.
(4) Push lever ⑯ down (half nut engaged) to start threading.

5.3 THREADING INDICATOR (table3 P.22)

The threading indicator installed on the apron side has eight graduations. For cutting inch thread, the thread cutting indicator is prepared for correct position of half nut engaging conveniently and quickly.
As to metric thread cutting, half nut should be engaged with lead screw completely (When lead screw is inch).Let tool post back up to starting position by reversing spindle rotation, then feed again.

5.4 Operation steps of Auto Rapid Threading Device (Opt.)

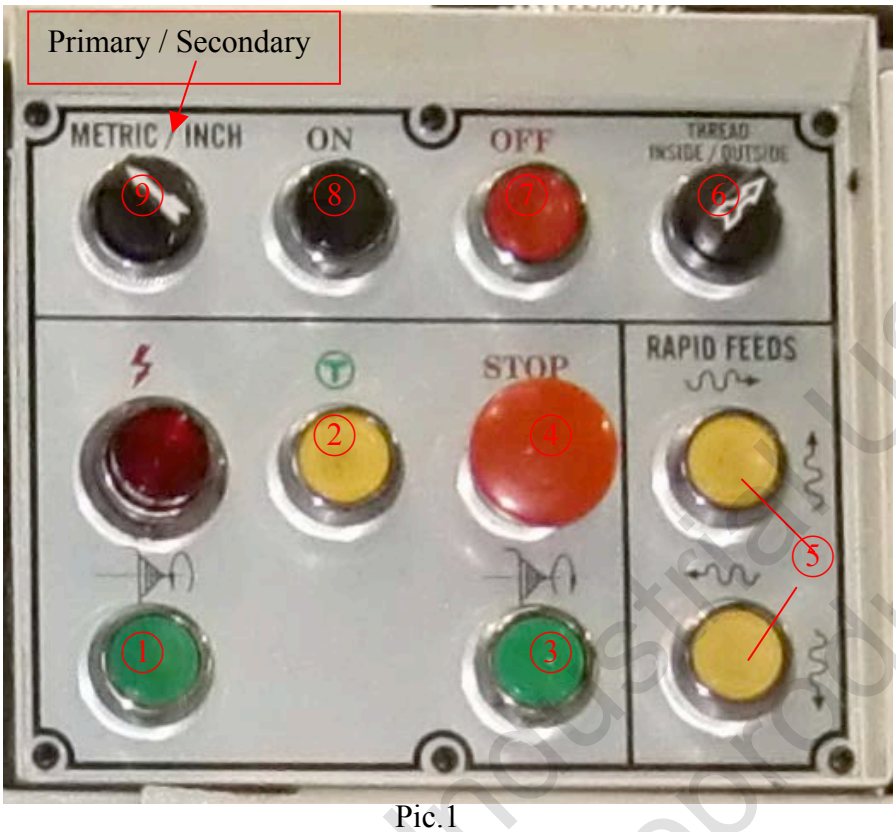

Pic.1

Item	Name
1	Spindle forward
2	Spindle jog
3	Spindle reverse
4	Spindle brake
5	4-way rapid traverse
6	ID/OD select
7	Auto threading stop
8	Auto threading start
9	Thread system select

Steps of auto threading

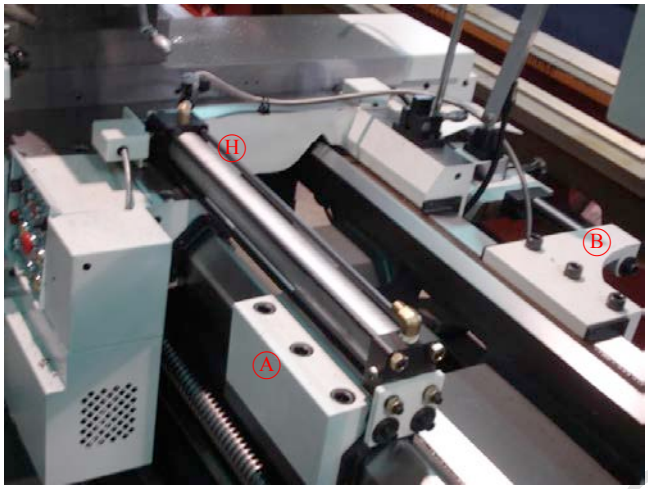

Pic.2

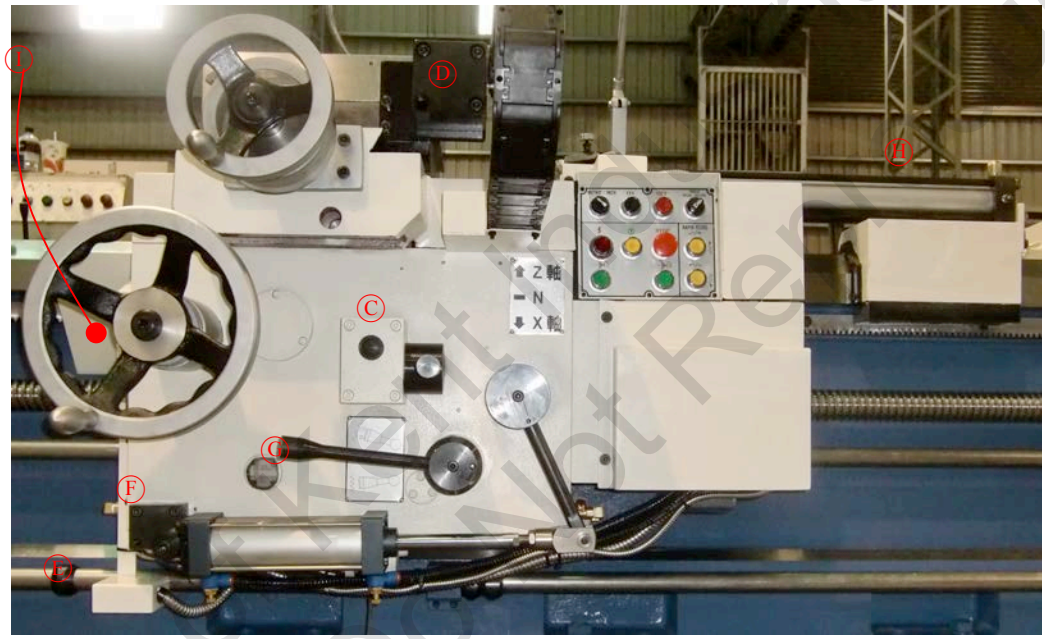

Pic.3

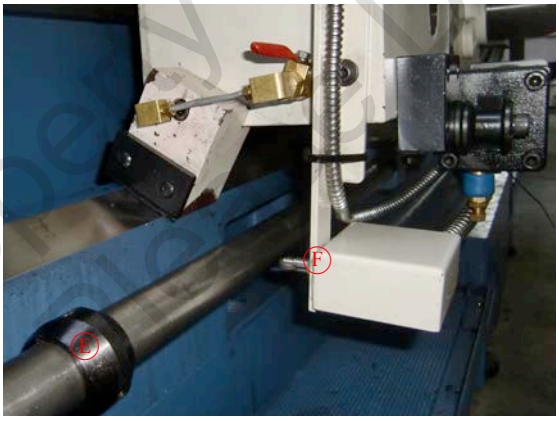

Pic.4

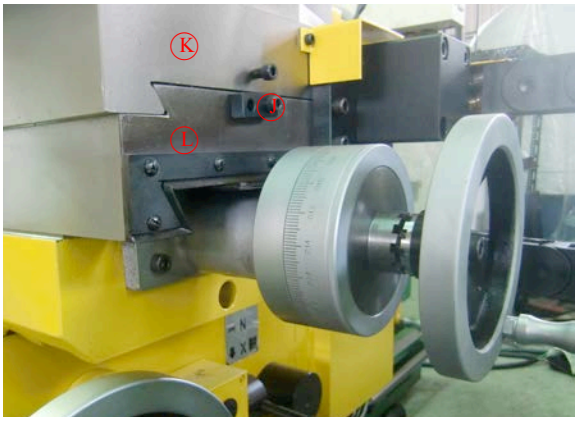

Pic.5

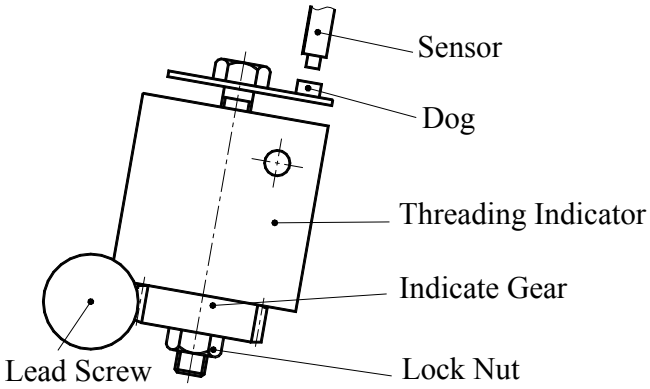

Diag.1

＊ Primary threading system:
(If the customer chooses inch / metric lead screw, the primary thread will be inch / metric thread; the other should be secondary thread.)

1. Move the carriage close to the beginning of the threading cycle. Lock the nuts of the hydraulic cylinder bracket Ⓐ (Move the carriage backward by Z-axis hand wheel to minimize the stroke of the piston rod of the hydraulic cylinder Ⓗ). Lock the taper attachment draw bar base Ⓑ (if the taper attachment is installed). Adjust the taper on the taper attachment for turning. Please be aware of the travel limitation.
2. Before starting auto threading, please turn lever Ⓒ to neutral position (shown in Pic.3); otherwise, the carriage behaves in feeding mode but not threading mode.
3. Fixed plate Ⓙ (shown in Pic.5) is used to fix the base of the toolpost Ⓚ on the slide-way of the carriage Ⓛ. It would be used to get better accuracy if the lathe is operated in feeding mode. Otherwise, in auto threading mode, please take off the screw to separate Ⓚ from Ⓛ.
4. Turn the switch ⑨ left to select the primary threading system.
5. Make sure carefully that the spindle has stopped. Then, select ID or OD threading by Switch ⑥, and then press Button ⑧ to locate toolpost in a feeding position. Set the tooling depth by X-axis hand-wheel. After setting the x-axis, press Button ⑦, and hydraulic device Ⓓ will pull the toolpost back to leave the threading position. (Be careful. If the spindle is rotating, the carriage will move on Z-axis when you press Button ⑧.)
6. Decide the end of the thread; you can locate the eccentric ring Ⓔ (shown in Pic.4) on the stop rod to set the end of the travel on Z-axis. (If the micro switch Ⓕ touches the eccentric ring, the threading travel ends.)
7. Make sure the carriage is in the beginning of the thread travel. Then, select the speed of the spindle and confirm the type of the thread by turning the levers on the headstock.
8. If you have already checked Item 1 to Item 7, press button ① to let the spindle rotate forward (so does the lead screw), and press button ⑧ to start the auto threading cycle.
9. Cycle-threading:
   A. The hydraulic device Ⓓ moves the toolpost to threading position, the pneumatic cylinder Ⓖ pulls the lever and it makes the half nuts closed; cycle starts.
   B. When the micro switch Ⓕ touches the eccentric ring Ⓔ, the threading travel ends. The hydraulic device Ⓓ lets the toolpost leave the threading position, the pneumatic cylinder Ⓖ turns back the lever, and then half nuts open. After that, the hydraulic cylinder Ⓗ will pull the whole carriage back to the beginning of the travel.
   C. The Thread cutting indicator Ⓘ indicates the thread pitch. The dog rotates along with the lead screw, and when the dog meets the sensor (shown in Diag.1), threading cycle (Step A to C) will go again. Before the next cycle starts, the operator could adjust the tooling depth by the X-axis hand wheel. (It means the pitch of the lead screw and the thread on the workpiece matches that the dog meets the sensor.)

10. Repeat the cycle several times to machine the thread. When the sufficient cycles have been done, press button ⑦ to stop the auto threading function.

＊ Secondary threading system:

1. Move the carriage close to the beginning of the threading cycle. *Unlock* the nuts of the hydraulic cylinder bracket Ⓐ (shown in Pic.2) but lock the taper attachment draw bar base Ⓑ (if the taper attachment is installed). Adjust the taper on the taper attachment for turning. Be aware of the travel limitation.
2. Before starting auto threading, please turn lever Ⓒ to neutral position (shown in Pic.3); otherwise, the carriage behaves in feeding mode but not threading mode.
3. Fixed plate Ⓙ (shown in Pic.5) is used to fix the base of the toolpost Ⓚ on the slide-way of the carriage Ⓛ. It would be used to get better accuracy if the lathe is operated in feeding mode. Otherwise, in auto threading mode, please take off the screw to separate Ⓚ from Ⓛ.
4. Turn the switch ⑨ right to select the secondary threading system.
5. Make sure carefully that the spindle has stopped. Then, select ID or OD threading by Switch ⑥, and press Button ⑧ to locate toolpost in a feeding position. Then set the tooling depth by X-axis hand wheel. After setting up the X-axis, press Button ⑦, and hydraulic device Ⓓ will pull the toolpost back to leave the threading position. (Be careful. If the spindle is rotating, the carriage will move on Z-axis when you press Button ⑧.)
6. Decide the end of the thread; you can locate the eccentric ring Ⓔ (shown in Pic.4) on the stop rod to set the end of the travel on Z-axis. (If the micro switch Ⓕ touches the eccentric ring, the threading travel ends.)
7. Make sure the carriage is in the beginning of the thread travel. Then, select the speed of the spindle and confirm the type of the thread by turning the levers on the headstock.
8. Cycle-threading (please check Item 1 to Item 7):
   A. Press button ⑧ to start the secondary threading system. Half nuts will be closed at the beginning.
   B. Press button ① to let the spindle rotate forward (so does the lead screw), and the carriage moves forward.
   C. The hydraulic device Ⓓ moves the toolpost to threading position.
   D. When the micro switch Ⓕ touches the eccentric ring Ⓔ, the threading travel ends. The spindle stops, and the lead screw does, too. Then the hydraulic device Ⓓ lets the toolpost leave the threading position. (Please notice that half nuts are still closed, and the hydraulic cylinder Ⓗ won't work at this system.)
   E. Press button ③ to rotate the spindle and lead screw reversely. When the carriage go back to the beginning, press button ④ to stop spindle rotating and stop the carriage moving. Before the next cycle starts, the operator could adjust the tooling depth by the X-axis hand wheel.
9. Repeat the step A to E several times to get the thread.

＊ DOG Adjustment of Threading Indicator:

When we test running in our company, we set spindle speed from 45rpm to 65 rpm, and range of thread pitch about 5 TPI. When spindle drives fast, half nut engagement doesn't speed up as lead screw's speed. .Half nut will fail to match on lead screw teeth, making false on thread pitch or violent dash condition of air cylinder. Then, spindle should stop moving.
Pushing on switch Ⓠ, rotating big hand wheel of Apron to make DOG and SENSOR match; air cylinder makes open-close nut match.
Then loose the indicator, and draw DOG anti-clock about half range. Following these, when the range of speed is over larger, it needs to adjust the DOG, and the auto-threading will drive smoothly.

CHAPTER 6 MAINTENANCE

6.1 LUBRICATIONS

6.1.1 Lubrication in headstock & norton feed gear box & apron box.

Oil bathed lubrication for both gear boxes. Please be sure the oil no lower than min. level of oil window.

6.1.2 Lubrication in change gears

(Transmission gears) open the Headstock Rear Cover, lubricate with oil for daily maintenance.

6.1.3 Lubrication in carriage and apron

Carriage slides and cross screw to be oiled by auto lubricator.

6.1.4 Lubrication in compound rest, lead screw and lead screw bracket

Hand oiling is required from time to time.

6.1.5 Coolant for cutting

The coolant pump control switch is located top of Norton feed gear box. The pump works while turn on

6.1.6 Lubricant Table

NO.	SPECIFICATION	ISO SPECIFICATION	VISCOMETER CST@40℃	CHANGE PERIODS
1	GEAR LUBRICATING OIL: Headstock, gear box, apron, and other gear change mechanism	VG-32	32	FIRST: ONCE/3 MONTHS AFTERWARD: ONCE/6MONTHS
2	SLIDEWAY LUBRICATING OIL	VG-68	68	REFILL BY LOW LIMITATION
3	HYDRAULIC FLUID	VG-46	46	FIRST: ONCE/3 MONTHS AFTERWARD: ONCE/6MONTHS
4	Air fit combination unit of F.R.L	VG-32	32	ONCE / 6 MONTHS

6.2 Lubrication System

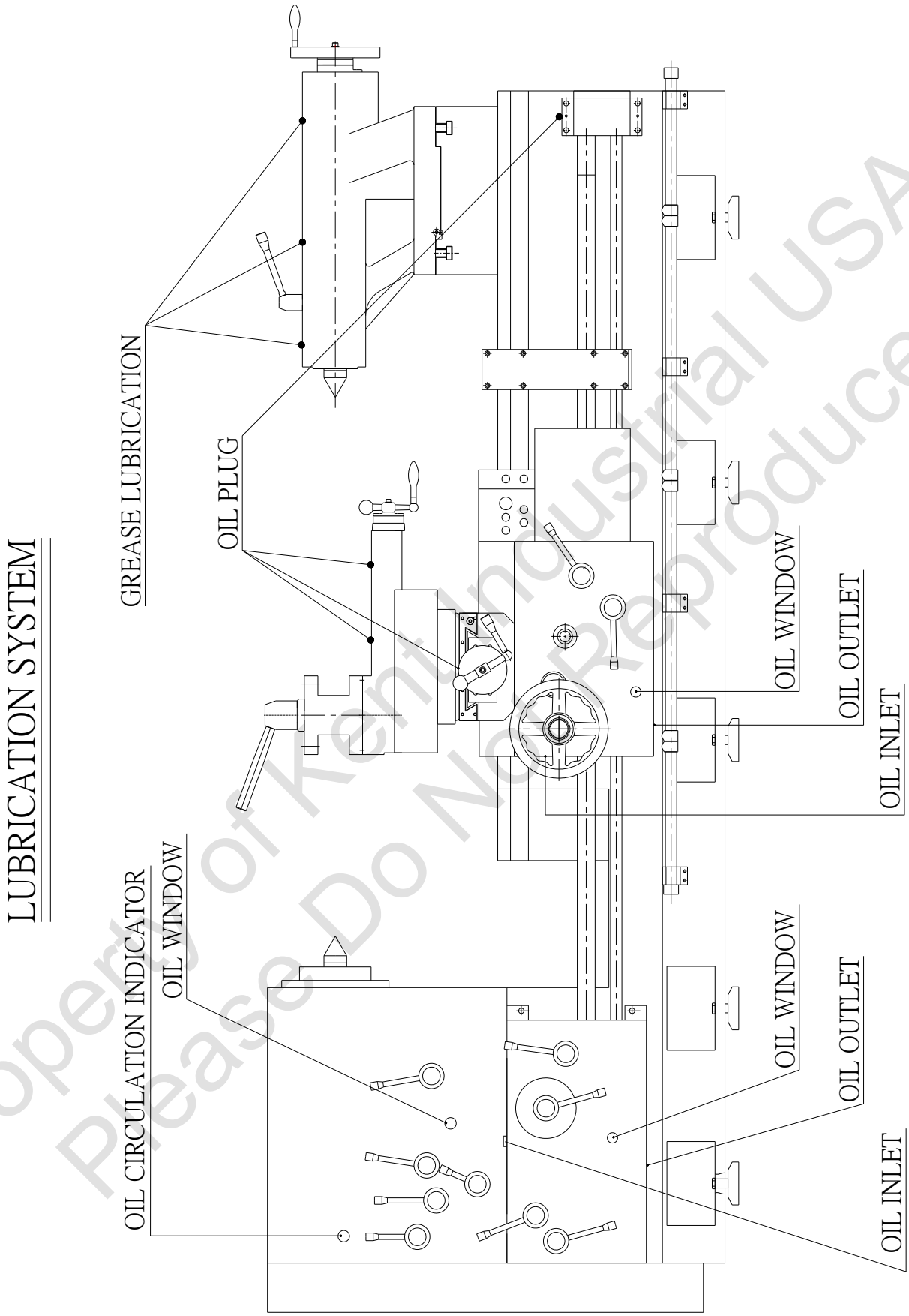

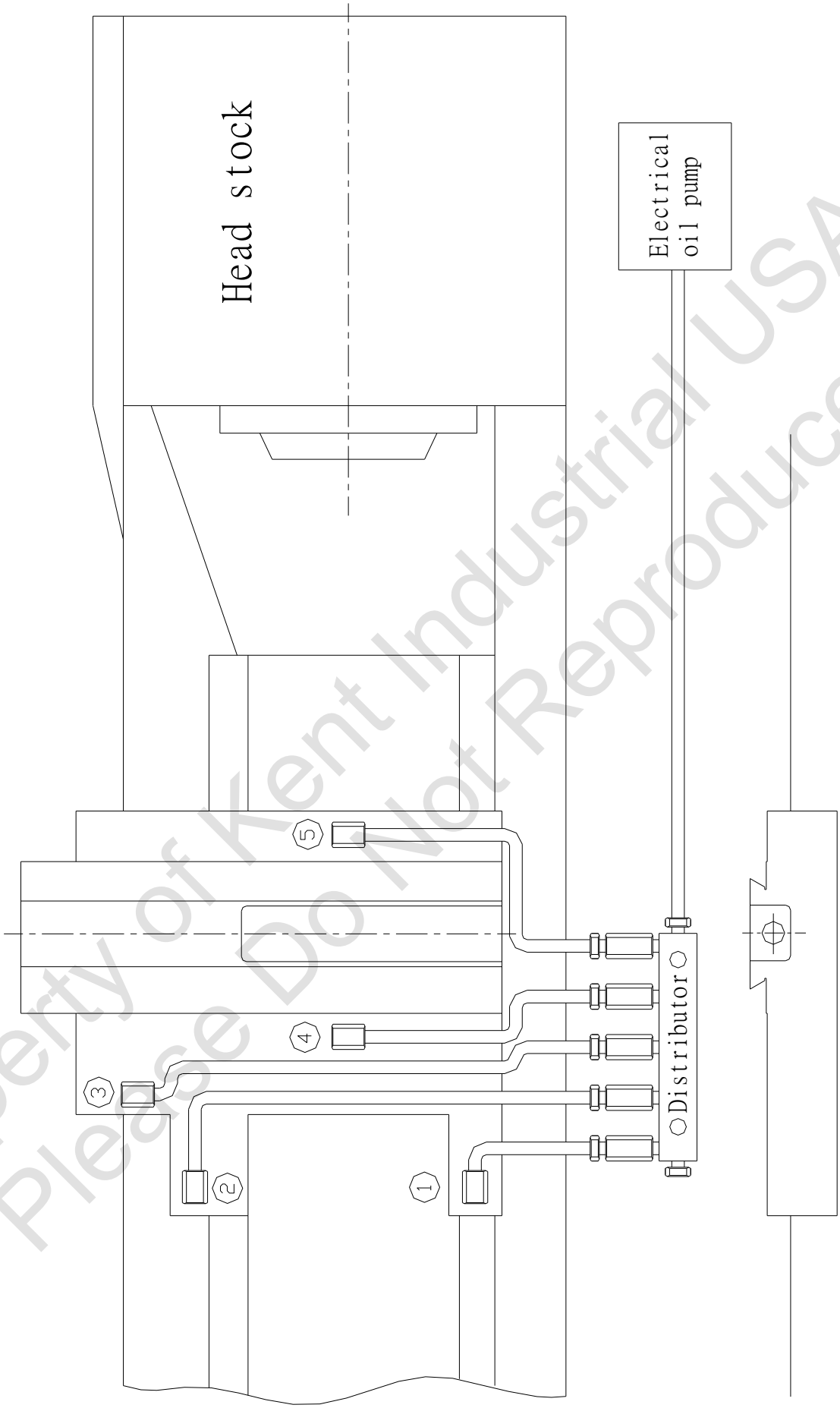

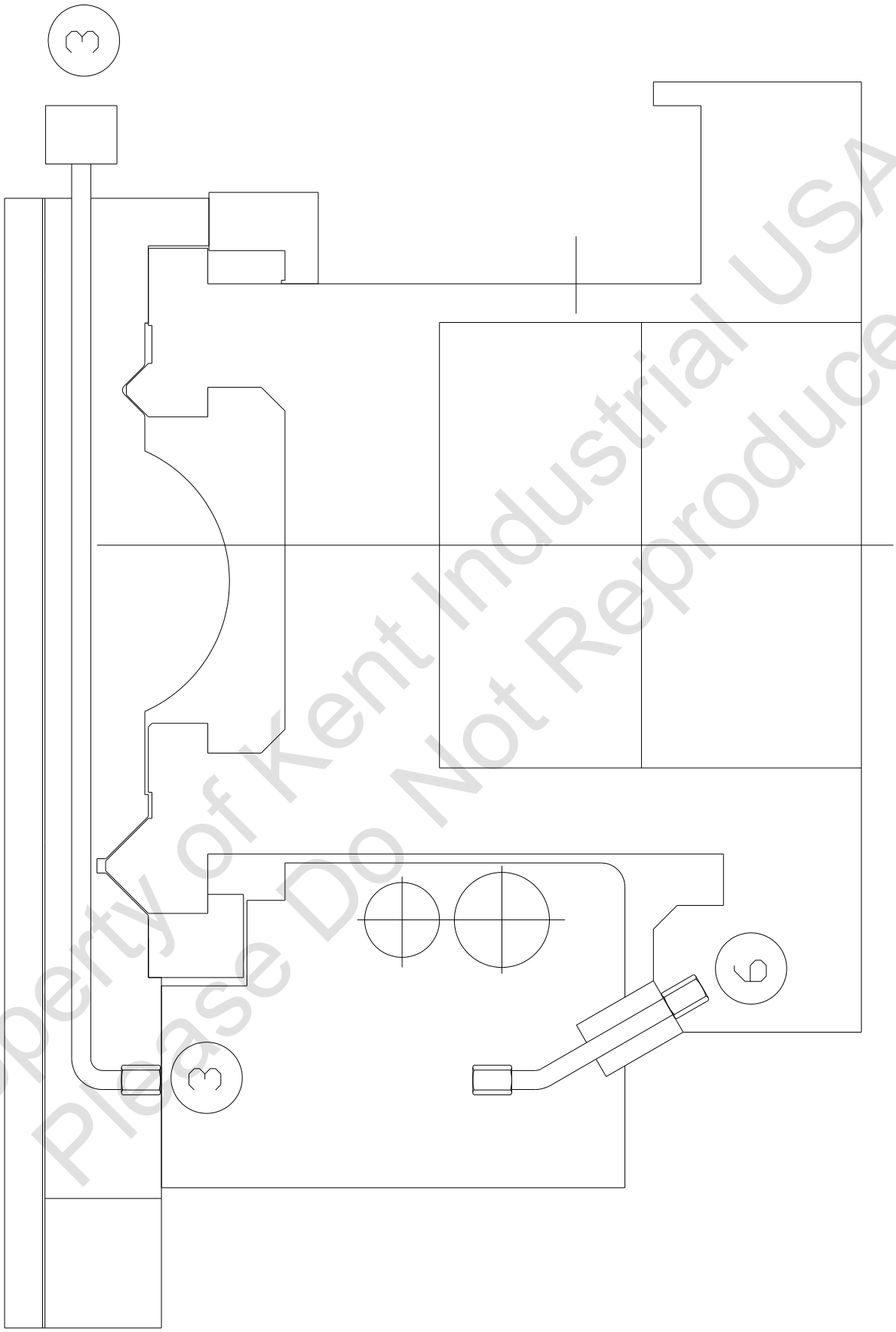

Part List

BED

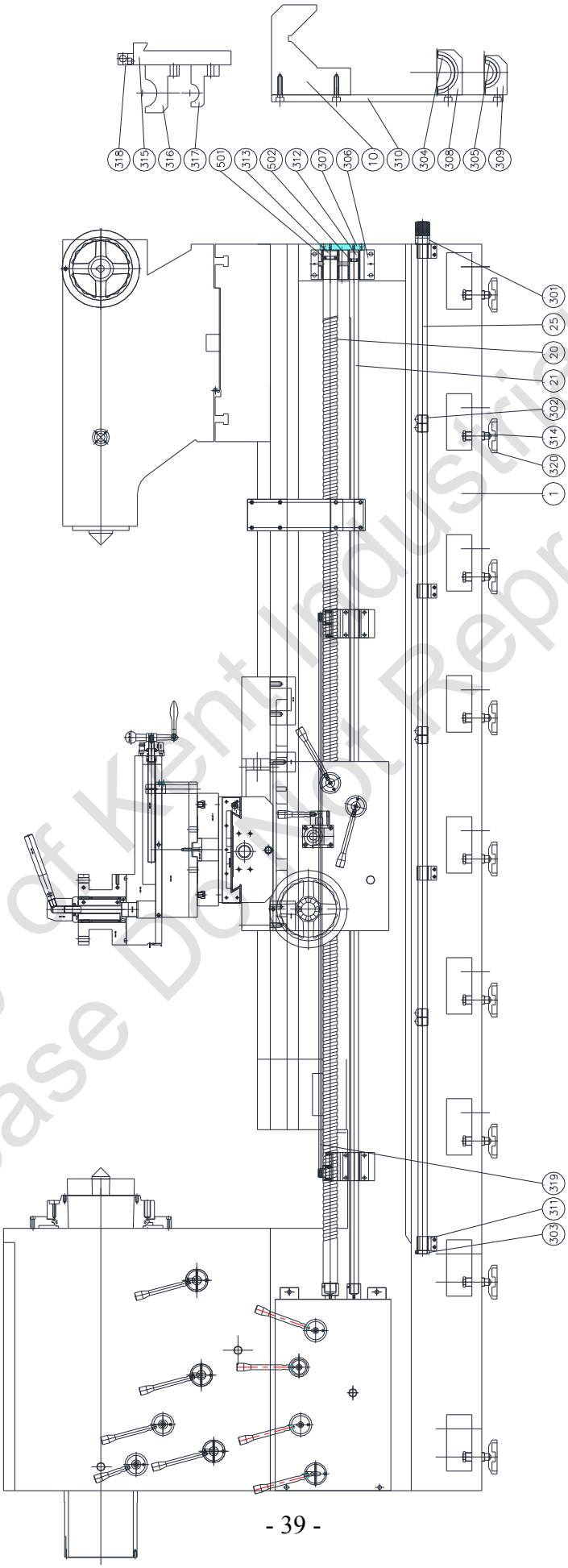

BED

ITEM	PART NO	DESCRIPTION	Q TY
1	46B-001	BED	1
10	46B-010	GRIP BLOCK	1
20	46B-020	LEAD SCREW	1
21	46B-021	FEED LEVER	1
35	46B-025	STOP LEVER	1
301	26B-011	SLEEVE	1
302	26B-012	ECCENIRIC	1
303	26B-072	SET RING	1
304	38B-003	BRASS SLEEVE	1
305	38B-004	BRASS SLEEVE	1
306	38B-005	BRACKET	1
307	38B-006-01	BRACKET CUP	1
308	38B-007	LEAD SCREW LEVER	1
309	38B-008	FEED LEVER BRACKET	1
310	38B-009	FIX PLATE	1
311	38B-026	LEVER BRACKET	1
312	38B-051	FEED SLEEVE BLOCK	1
313	38B-052	LEAD SCREW BLOCK	1
314	38B-054	SCREW	1
315	38B-061	LEADSCREW SHIFT	1
316	38B-062-1	BRACKET	1
317	38B-062-2	BRACKET	1
318	38B-063	LEVER BOSS	1
319	38B-064	LEVER	1
320	38B-082	LEVER PAD	1
501		BEARING 51106	1
502		BEARING 51103	1

HEADSTOCK

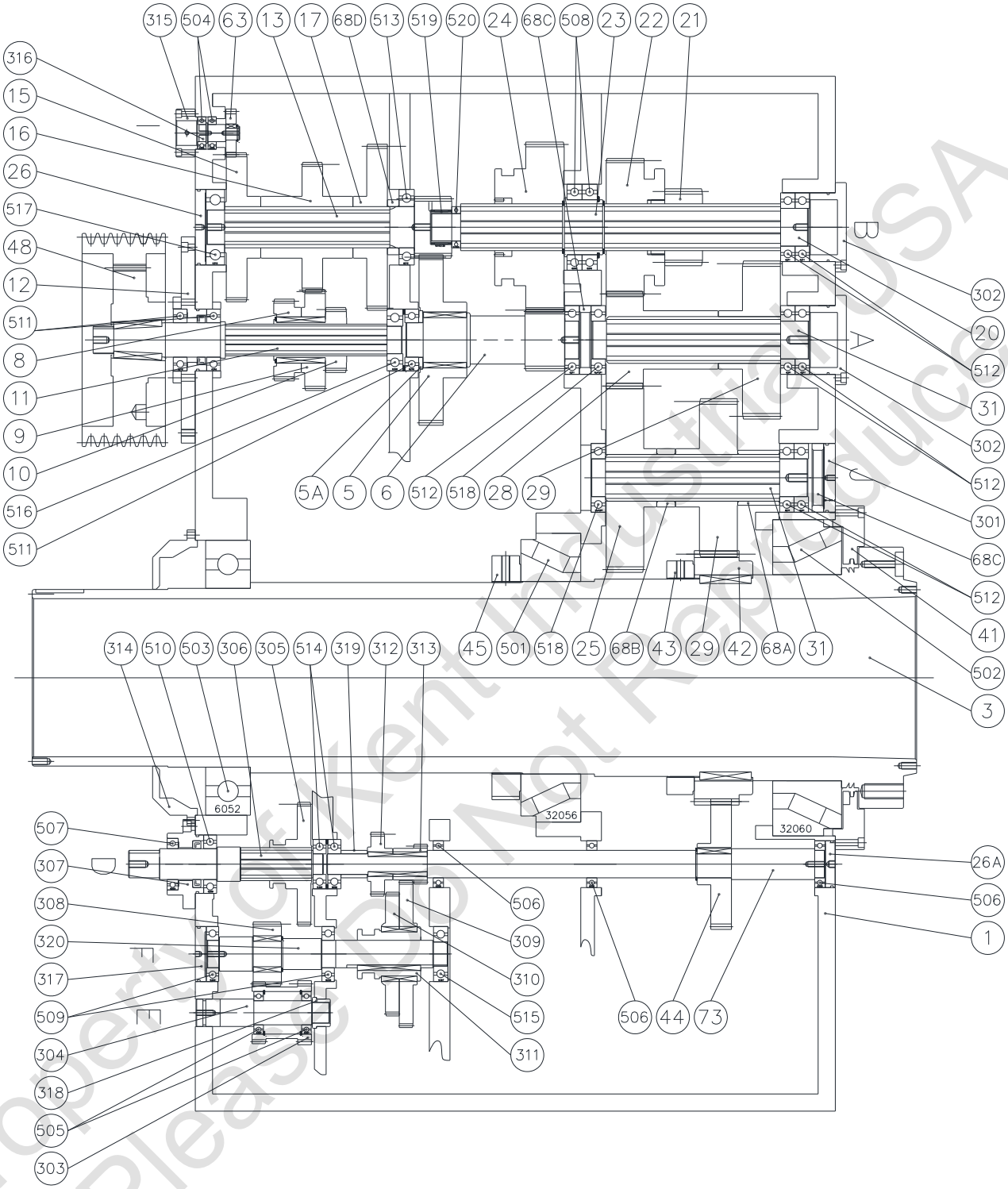

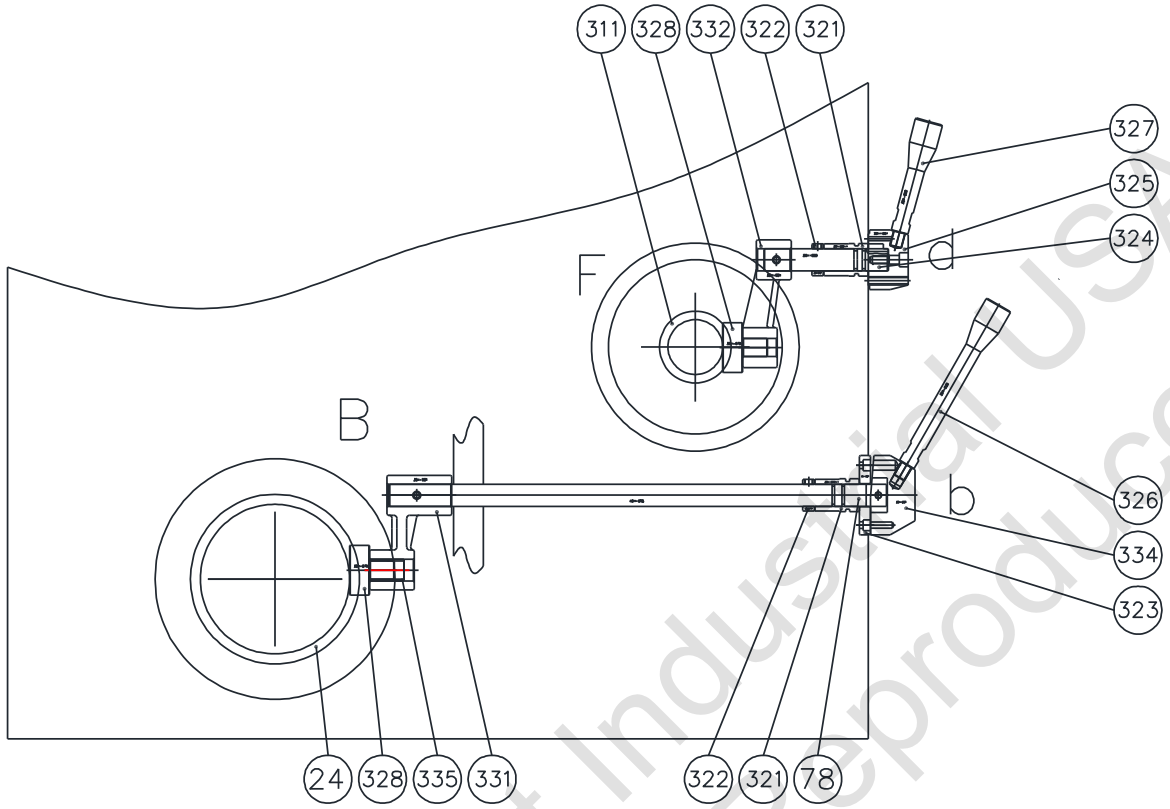

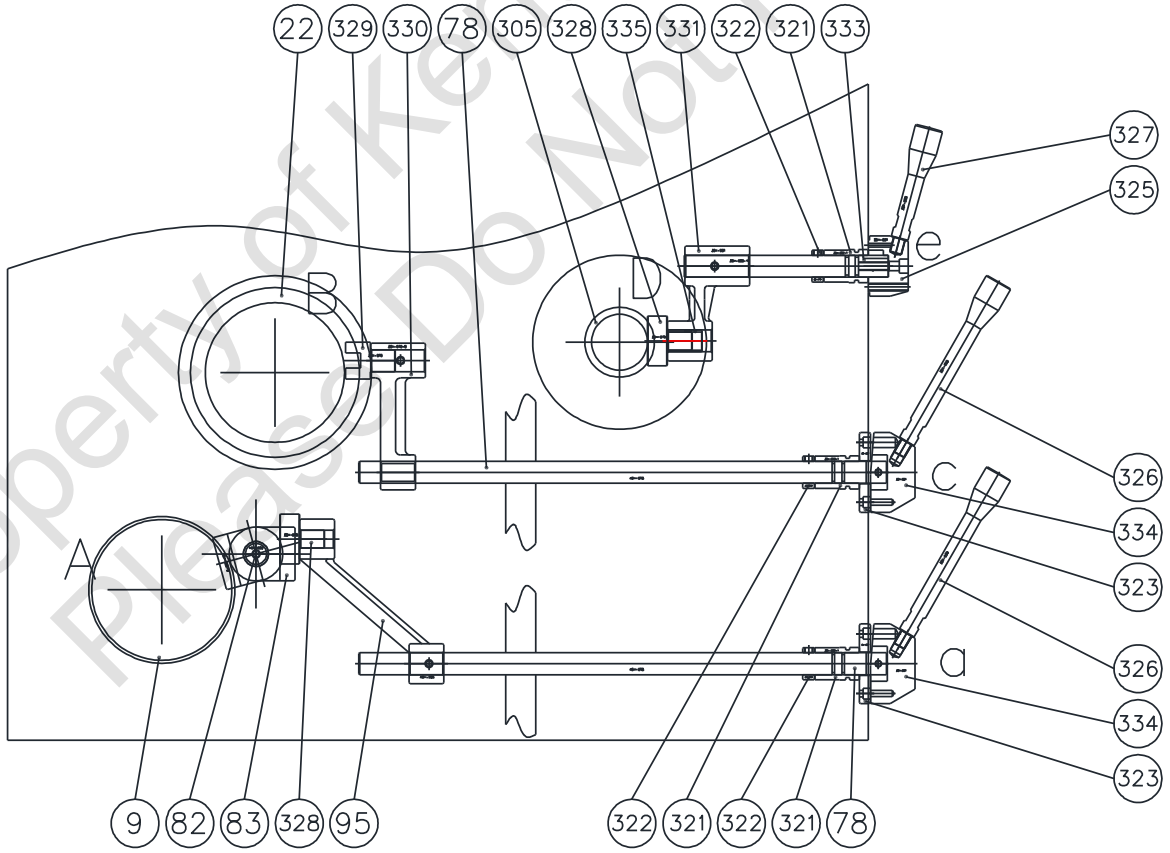

HEADSTOCK

ITEM	PART NO	DESCRIPTION	Q TY
1	46H-001-9	HEADSTOCK	1
3	46H-003-9	MAIN SPINDLE	1
5	46H-005	GEAR	1
5A	46H-005-1	RING	1
6	46H-006	OUTPUT SHAFT	1
8	46H-008	SPUR GEAR	1
9	46H-009	SPUR GEAR	1
10	46H-010	SIX-FLUTED GEAR	1
11	46H-011	SIX-FLUTED SHAFT	1
12	46H-012	INPUT SHAFT CUP	1
13	46H-013	SHIFT GEAR	1
15	46H-015	SHIFT GEAR	1
16	46H-016	SHIFT GEAR	1
17	46H-017	SHIFT GEAR	1
20	46H-020	SIX-FLUTED SHAFT	1
21	46H-021	GEAR	1
22	46H-022	GEAR	1
23	46H-023	SHAFT SLEEVE	1
24	46H-024	SHIFT GEAR	1
25	46H-025	GEAR	1
26	46H-026	SHAFT CUP	1
26A	46H-026-1	SHAFT CUP	1
28	46H-028	SHIFT GEAR	1
29	46H-029	GEAR	1
31	46H-031	SIX-FLUTED SHAFT	1
41	46H-041-9	FRONT SHAFT CUP	1
42	46H-042-9	GEAR	1
43	46H-043-9	NUT	1
44	46H-044-9	LAZY PINION	1
45	46H-045-9	NUT	1
48	46H-048	PULLEY	1
63	46H-063	GEAR	1
68A	46H-068-1	RING	1
68B	46H-068-2	RING	1
68C	46H-068-3	RING	1
68D	46H-068-4	RING	1
73	46H-073	TRANSMISSION SHAFT	1
78	46H-078	SPEED CHANGE LEVER	1
82	46H-082	SET POSITION SHAFT	1
83	46H-083-9	SPEED CHANGE FORK	1
95	46H-95	SHIFT ROCKARM SPEED CHANGE	1

301	38H-019-1	OUTPUT SHAFT CUP	1
302	38H-026	SHAFT CUP	1
303	38H-034	GEAR	1
304	38H-035	CENTER SHAFT	1
305	38H-036	OUTPUT GEAR	1
306	38H037	OUTPUT SHAFT	1
307	38H-039	OUTPUR SHAFT CUP	1
308	38H-044-A	SHAFT GEAR	1
309	38H-044-B	GEAR	1
310	38H-044-C	GEAR	1
311	38H-044-D	GEAR SLEEVE	1
312	38H-044-E	GEAR	1
313	38H-044-F	GEAR	1
314	38H-046-9	REAR SHAFT CUP	1
315	38H-061	SHAFT CUP	1
316	38H-062	SHAFT	1
317	38H-066-9	SHAFT PLUG	1
318	38H-069	SHAFT SLEEVE	1
319	38H-070	SPACER	1
320	38H-074	F-SHAFT	1
321	26H-052-1	SHAFT SLEEVE	1
322	26H-072	SPACER	1
323	26H-087	SET SPEED DIAL	1
324	26H-088	SPEED CHANGE SHAFT	1
325	26H-091	BOSS	1
326	38A-039	GEAR LEVER	1
327	38A-058	CHANGE LEVER	1
328	38H-075	FORK	1
329	38H-076	FORK	1
330	38H-079-B	SHIFT ROCKARM	1
331	38H-081	SHIFT ROCKARM	1
332	38H-084	SHIFT ROCKARM	1
333	38H-089-14	SET POSITION SHAFT	1
334	38H-091	BOSS	1
335	38H-096	CHANGE SPEED BRACKET	1
501		BEARING 32056	1
502		BEARING 32060	1
503		BEARING 6052	1
504		BEARING 6005	1
505		BEARING 6007	1
506		BEARING 6008	1
507		BEARING 6009	1
508		BEARING 6016	1
509		BEARING 6208	1

510		BEARING 6209	1
511		BEARING 6210	1
512		BEARING 6211	1
513		BEARING 6212	1
514		BEARING 6306	1
515		BEARING 6307	1
516		BEARING 6308	1
517		BEARING 6310	1
518		BEARING NUP211	1
519		BEARING NK 40/30	1
520		BEARING 51108	1

GEAR BOX

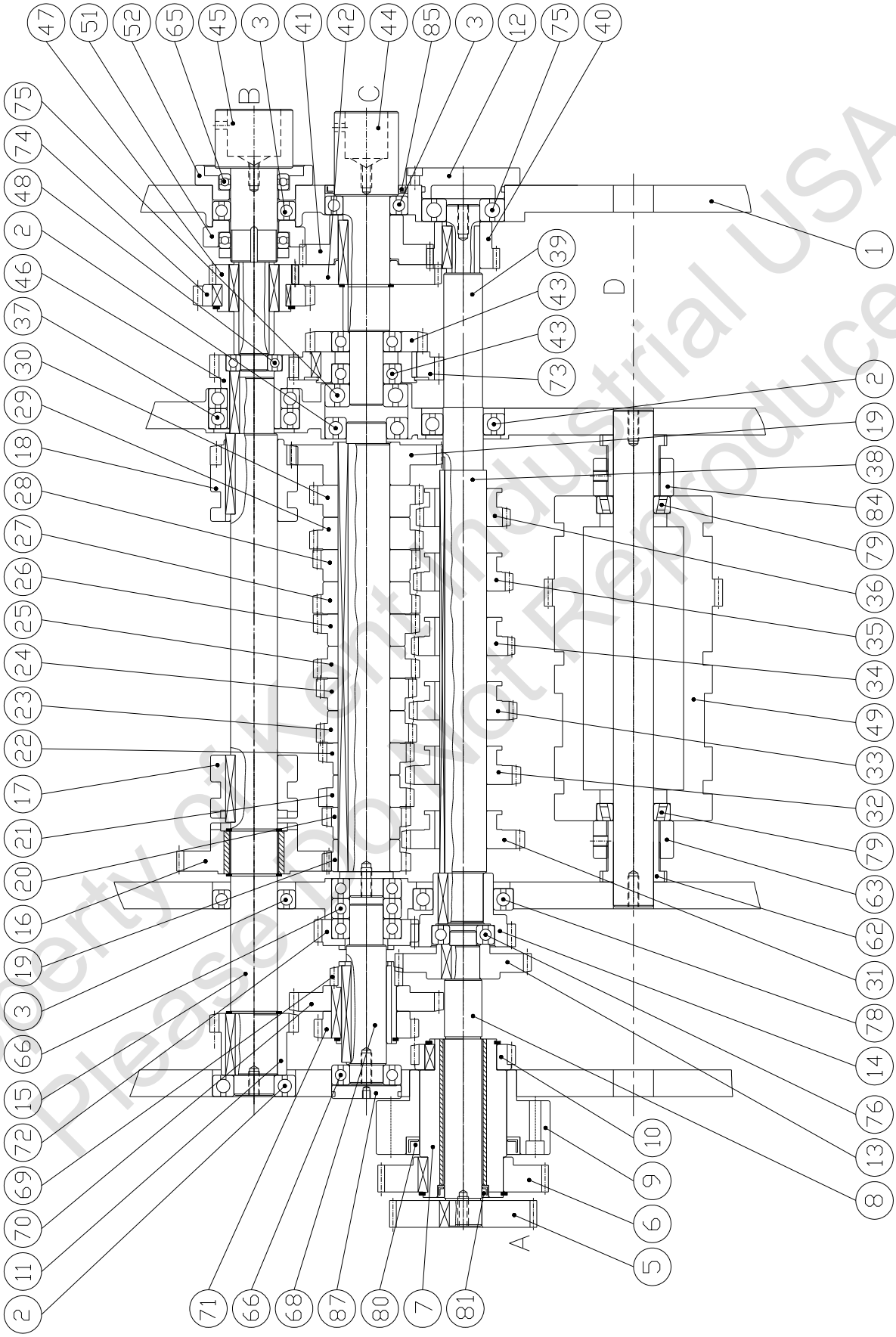

GEAR BOX

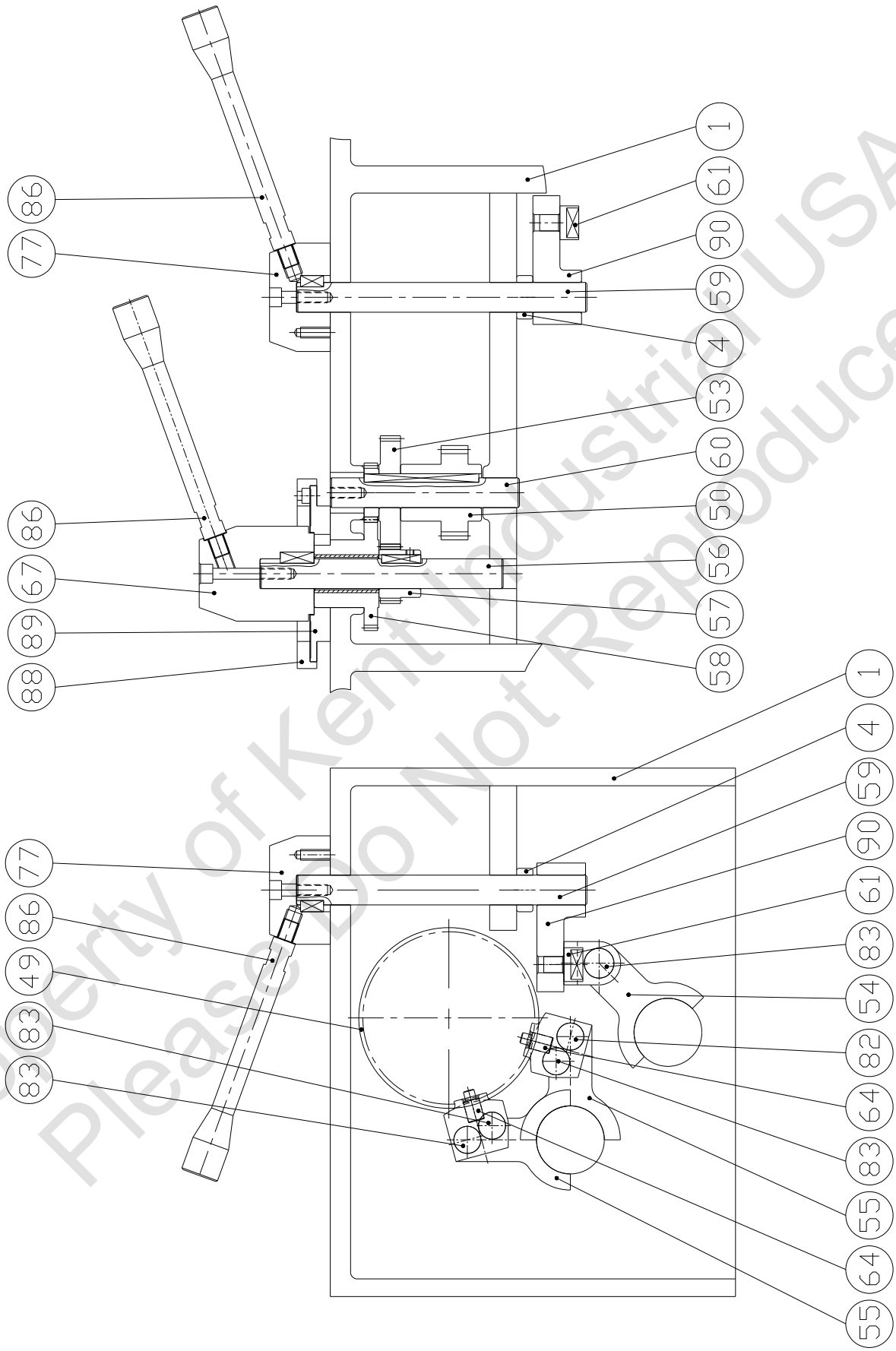

GEAR BOX

ITEM	PART NO	DESCRIPTION	Q TY
1	38G-001	GEAR BOX	1
2	6206#	BEARING	3
3	6007#	BEARING	3
4	38G-004	SHAFT COVER	1
5	38G-005	GEAR	1
6	38G-006	GEAR	1
7	38G-007	BUSH	1
8	38G-008	INPUT SHAFT	1
9	38G-009	INPUT SHAFT COVER	1
10	38G-010	GEAR	1
11	38G-011	CLUTCH GEAR	1
12	26H-036	CLUTCH GEAR	1
13	38G-013	GEAR	1
14	38G-014	GEAR	1
15	38G-015	B SHAFT	1
16	38G-016	CLUTCH GEAR	1
17	38G-017	CLUTCH GEAR	1
18	38G-018	GEAR CHANGE	1
19	38G-019	GEAR	1
20	38G-020	GEAR	1
21	38G-021	GEAR	1
22	38G-022	GEAR	1
23	38G-023	GEAR	1
24	38G-024	GEAR	1
25	38G-025	GEAR	1
26	38G-026	GEAR	1
27	38G-027	GEAR	1
28	38G-028	GEAR	1
29	38G-029	GEAR	1
30	38G-030	GEAR	1
31	38G-031	GEAR	1
32	38G-032	GEAR	1
33	38G-033	GEAR	1
34	38G-034	GEAR	1
35	38G-035	GEAR	1
36	38G-036	GEAR	1
37	6008#	BEARING	2
38	38G-038	GEAR SHAFT	1
39	38G-039	SPEED CHANGE SHAFT	1
40	38G-040	GEAR	1

41	38G-041	GEAR	1
42	38G-042	GEAR	1
43	38G-043	GEAR	1
44	38G-044	FEED SHAFT	1
45	38G-045	LEAD SHAFT	1
46	38G-046	GEAR	1
47	38G-047	GEAR	1
48	6004#	BEARING	1
49	38G-049	CAM	1
50	38G-050	SPIRAL GEAR	1
51	38G-051	GEAR	1
52	38G-052	SHAFT COVER	1
53	38G-053	GEAR	1
54	38G-054	MORING FORK	5
55	38G-055	SPEED CHANGE FORK	6
56	38G-060E	E SHAFT	1
57	38G-057	GEAR	1
58	38G-058	GEAR	1
59	38G-060B	B SHAFT	1
60	38G-060D	D SHAFT	1
61	38G-061	FORK	3
62	38G-062	SET SCREW	2
63	38G-063	SET NET	1
64	38G-064	MOVING TURNING POST	6
65	51107#	BEARING	2
66	6205#	BEARING	6
67	38G-067	LEVER BOSS	1
68	38G-068	SHAFT	1
69	38G-069	CLUTCH GEAR	1
70	38G-070	GEAR	1
71	38G-071	GEAR	1
72	38G-072	GEAR	1
73	38G-073	GEAR	1
74	38G-074	GEAR	1
75	6305#	BEARING	2
76	6204#	BEARING	1
77	38G-077	LEVER BOSS	1
78	6009#	BEARING	1
79	32006#	BEARING	2
80	658513	OIL SEAL	1
81	283809	OIL SEAL	1
82	38G-082	SPEED CHANGE SHAFT	2
83	38G-083	SPEED CHANGE SHAFT	2
84	38G-084	CAM SHAFT	1

85	486208	OIL SEAL TC486208	1
86	38A-039	GEAR LEVER	1
87	38G-087	GEAR	1
88	26H-084	SPEED LIST	1
89	26H-083	SPEED DIAL	1
90	38T-027	ROCKING ARM	1

APRON-LEFT HANDWHEEL

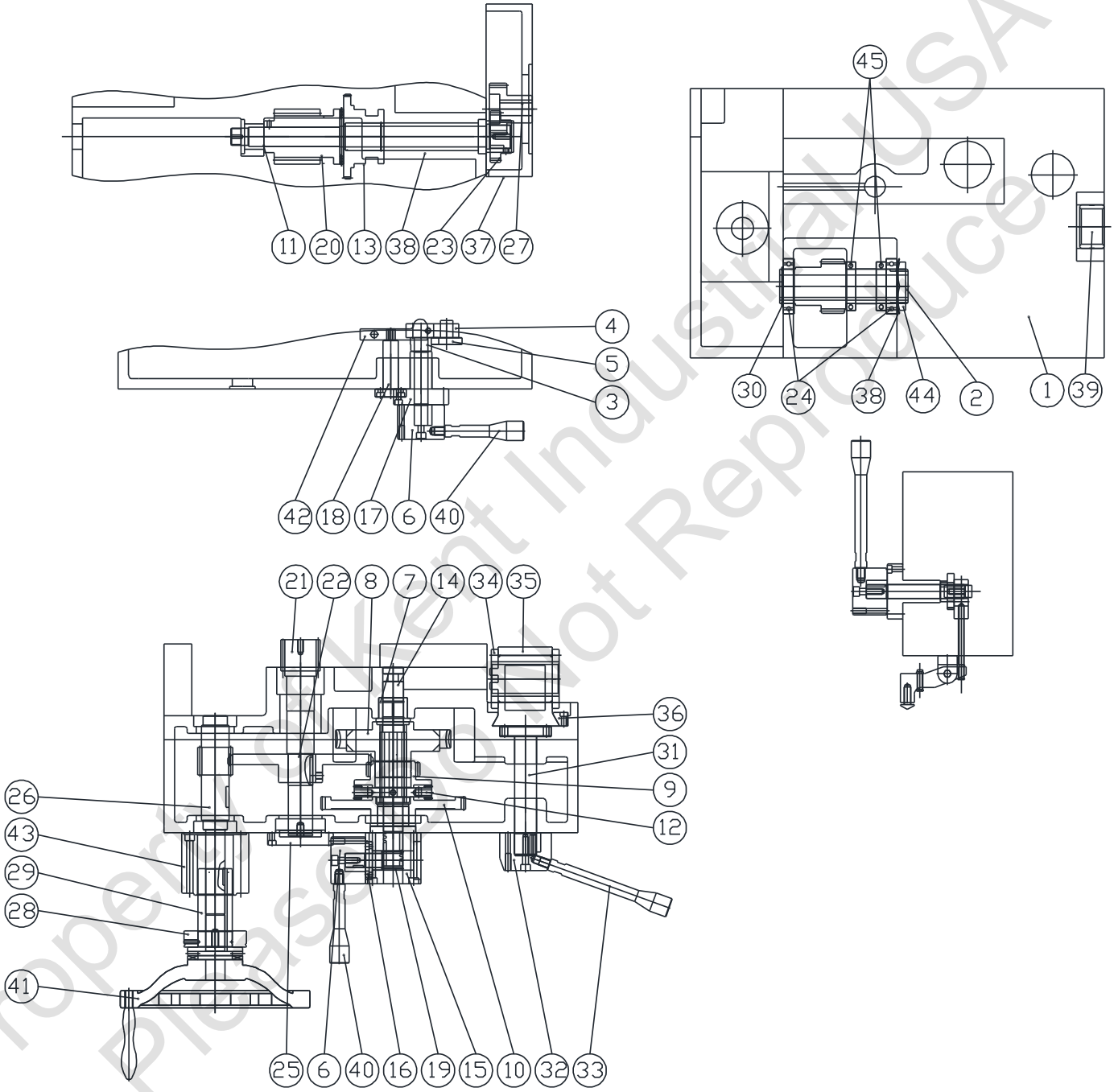

APRON-LEFT HANDWHEEL

ITEM	PART NO	DESCRIPTION	Q TY
1	38A-001L	APRON BODY-L	1
2	38A-003	DRIVE SHAFT GEAR	1
3	38A-004	CHANGE DIAL	1
4	38A-005	CHANGE ROCKING ARM	1
5	38A-005-1	SET BLOCK	1
6	38A-006	BOSS	1
7	38A-007	BRASS SLEERE	1
8	38A-008	WORM	1
9	38A-009	GEAR	1
10	38A-010	GEAR	1
11	38A-011L	SHAFT-L	1
12	38A-012	CLUTCH GEAR	1
13	38A-013	CLUTCH GEAR	1
14	38A-014	SPLINE SHAFT	1
15	38A-015R	CHANGE FRAME-R	1
16	38A-016	SET FRAME	1
17	38A-017	BRACKET	1
18	38A-017-1	CHANGE LEVER	1
19	38A-018	CHANGE GEAR SHAFT	1
20	38A-019	WORM GEAR	1
21	38A-020	RACK SHAFT	1
22	38A-021	GEAR	1
23	38A-027	SPAR GEAR	1
24	38A-030	CHANGE LEVER	1
25	38A-031	SHAFT CAP	1
26	38A-032L	GEAR SHAFT-L	1
27	38A-033	SPUR GEAR	1
28	38A-034M	DIAL	1
29	38A-035L	CLUTCH-LEFT-L	1
30	38A-036	CLUTCH	1
31	38A-037L	OPEN-CLOSE LEVER-L	1
32	38A-038	OPEN-CLOSE BOSS	1
33	38A-039	OPEN-CLOSE LEVER	1
34	38A-040	OPEN-CLOSE NUT	1
35	38A-041L	HALF NUT FRAME-L	1
36	38A-043	SET GIB	1
37	38A-048L	MOTOR COVER FRAME-L	1
38	38A-051L	CAP-L	1
39	38A-053	SLEEVE	1
40	38A-058	CHANGE LEVER	1
41	38A-059	HANDWHEEL	1
42	38A-062	SET BLOCK	1
43	38A-066L	HANDWHEEL SHAFT CAP-L	1

APRON-RIGHT HANDWHEEL

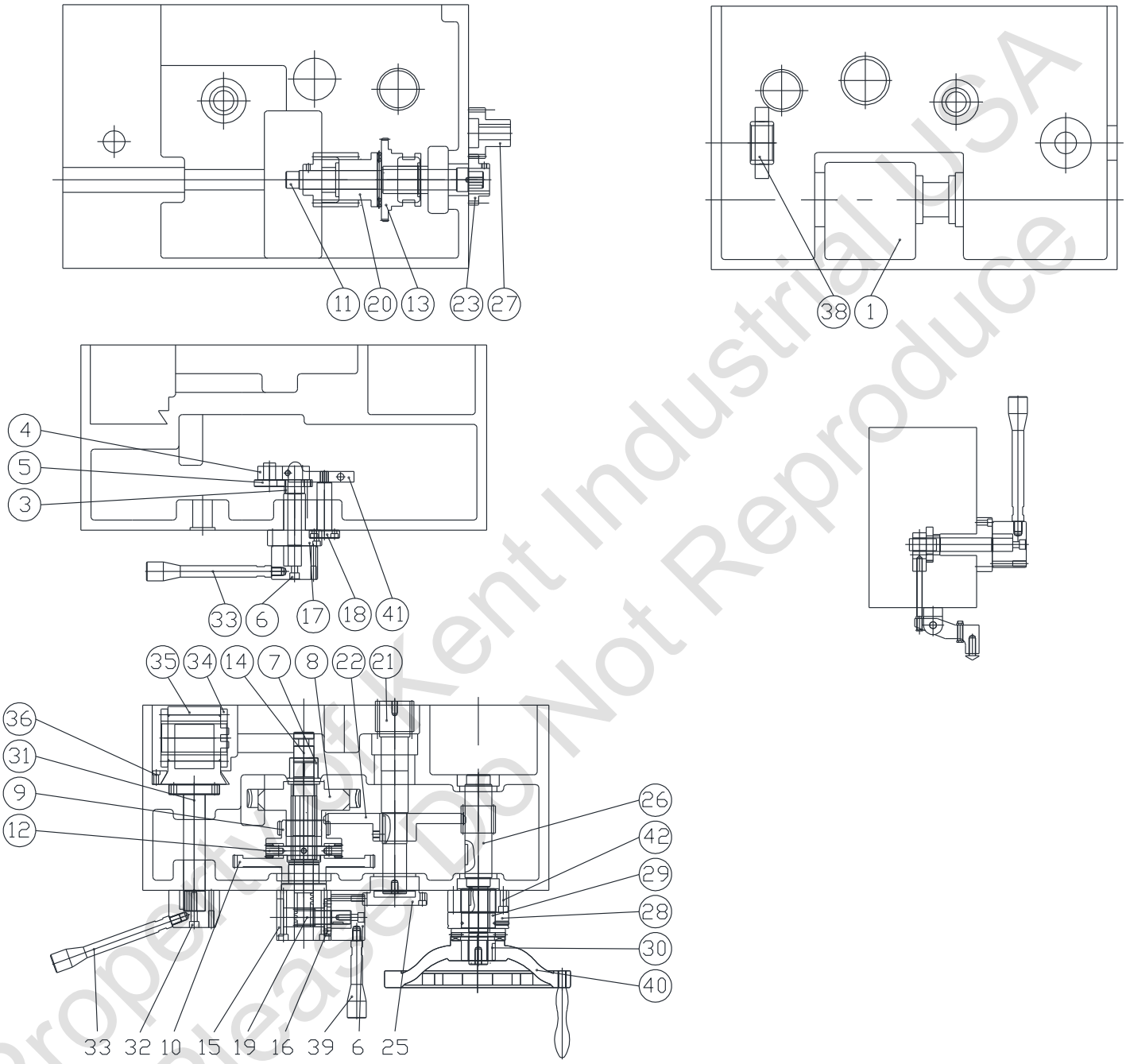

APRON- RIGHT HANDWHEEL

ITEM	PART NO	DESCRIPTION	Q TY
1	38A-001R	APRON BODY-R	1
2	38A-003	DRIVE SHAFT GEAR	1
3	38A-004	CHANGE DIAL	1
4	38A-005	CHANGE ROCKING ARM	1
5	38A-005-1	SET BLOCK	1
6	38A-006	BOSS	1
7	38A-007	BRASS SLEERE	1
8	38A-008	WORM	1
9	38A-009	GEAR	1
10	38A-010	GEAR	1
11	38A-011R	SHAFT-R	1
12	38A-012	CLUTCH GEAR	1
13	38A-013	CLUTCH GEAR	1
14	38A-014	SPLINE SHAFT	
15	38A-015R	CHANGE FRAME-R	1
16	38A-016	SET FRAME	1
17	38A-017	BRACKET	1
18	38A-017-1	CHANGE LEVER	1
19	38A-018	CHANGE GEAR SHAFT	1
20	38A-019	WORM GEAR	1
21	38A-020	RACK SHAFT	1
22	38A-021	GEAR	1
23	38A-027	SPAR GEAR	1
24	38A-030	CHANGE LEVER	1
25	38A-031	SHAFT CAP	1
26	38A-032R	GEAR SHAFT-R	1
27	38A-033	SPUR GEAR	1
28	38A-034M	DIAL	1
29	38A-035R	CLUTCH-RIGHT-R	1
30	38A-036	CLUTCH	1
31	38A-037R	OPEN-CLOSE LEVER-R	1
32	38A-038	OPEN-CLOSE BOSS	1
33	38A-039	OPEN-CLOSE LEVER	1
34	38A-040	OPEN-CLOSE NUT	1
35	38A-041R	HALF NUT FRAME-R	1
36	38A-043	SET GIB	1
37	38A-051R	CAP-R	1
38	38A-053	SLEEVE	1
39	38A-058	CHANGE LEVER	1
40	38A-059	HANDWHEEL	1
41	38A-062	SET BLOCK	1
42	38A-066R	HANDWHEEL SHAFT CAP-R	1

THERADING INDICATOR OF HANDWHELL APRON

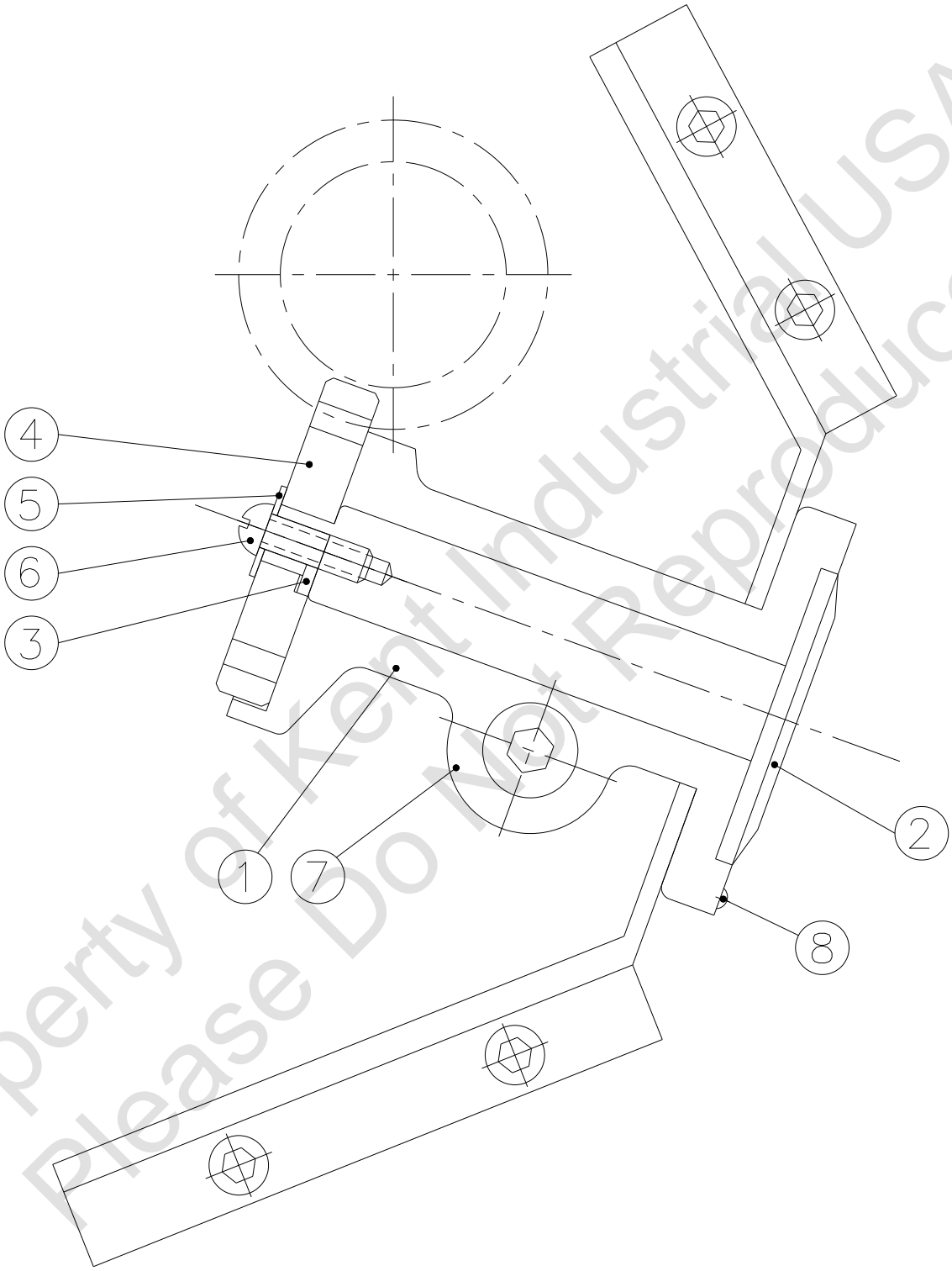

THERADING INDICATOR OF HANDWHELL APRON

ITEM	PART NO	DESCRIPTION	Q TY
1	38A-071	GUARO	1
2	38A-072	PAIL	1
3	38A-073	PIN	1
4	38A-074	GEAR	1
5	38A-075	WASHER	1
6	38A-076	SCREW	1
7	38A-077	LOCKIN PIN	1
8	38A-078	SCREW	1

TAILSTOCK

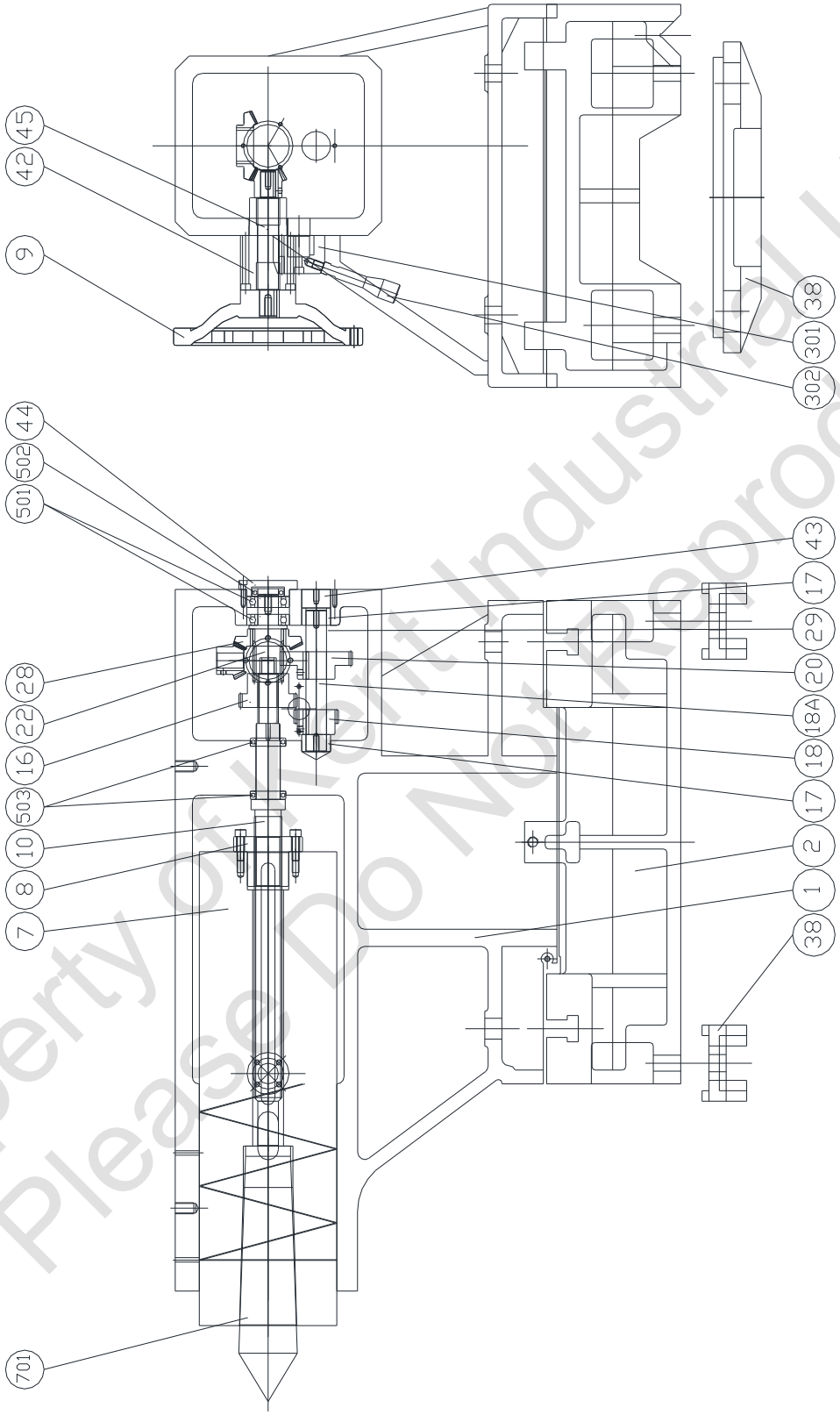

TAILSTOCK

ITEM	PART NO	DESCRIPTION	Q TY
1	46T-001	TAILSTOCK BODY	1
2	46T-002-200	BOTTOM	1
7	46T-007	MAIN SHAFT	1
8	46T-008	TAILSTOCK NUT	1
9	46T-009	HANDWHEEL	1
10	46T-010	TAILSTCOK LEADSCREW	1
16	46T-016	CLUTCH	1
17	46T-017	BRASS SLEEVE	2
18	46T-018	TRANSMISSION GEAR	1
18A	46T-018-1	TRANSMISSION SHAFT	1
20	46T-020	GEAR	1
22	46T-022	HAND WHEEL SHAFT	1
28	46T-028	SPIRAL BEVEL GEAR	1
38	46T-038	FIX PLATE	2
42	46T-042	BRACKET	1
43	46T-043	SAHFT PLUG	1
44	46T-044	SHAFT CUP	1
45	46T-045	TURNING SHAFT	1
301	38A-038	GEAR LEVER BOSS	1
302	38A-039-1	GEAR LEVER	1
501		BEARING 6206#	2
502		BEARING 51106#	1
503		BEARING 51107#	2
701		LIVE CENTER MT#7	1

TAILSTOCK (ROTARY QUILL) (Option)

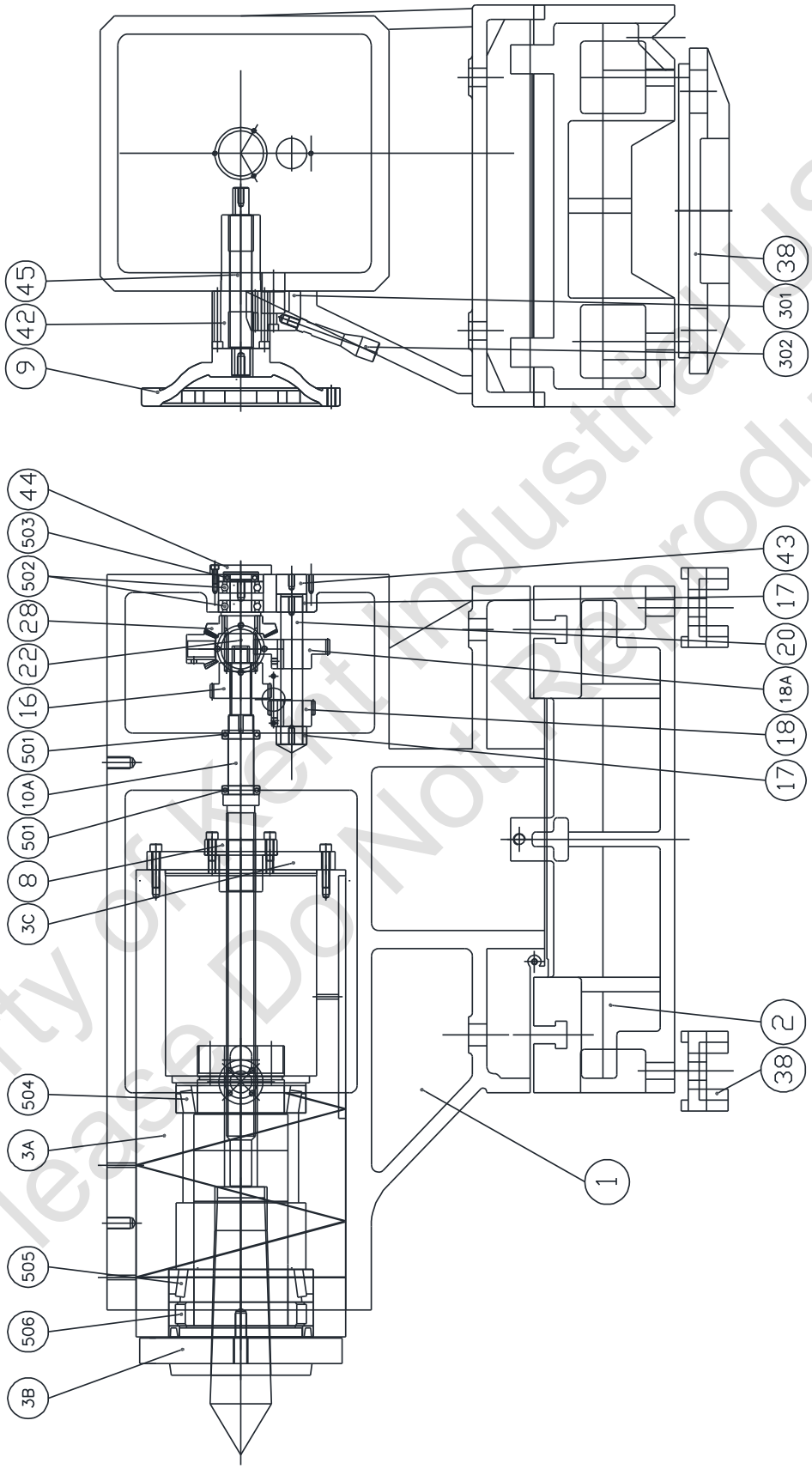

TAILSTOCK (ROTARY QUILL) (Option)

ITEM	PART NO	DESCRIPTION	Q TY
1	46T-001	TAILSTOCK BODY	1
2	46T-002-200	BOTTOM	1
3A	46T-003-1	QUILL	1
3B	46T-003-2	ROTARY SPINDLE	1
3C	46T-003-3	BRACKET	1
8	46T-008	TAILSTOCK NUT	1
9	46T-009	HANDWHEEL	1
10A	46T-010-1	TAILSTCOK LEADSCREW	1
16	46T-016	CLUTCH	1
17	46T-017	BRASS SLEEVE	2
18	46T-018	TRANSMISSION GEAR	1
18A	46T-018-1	TRANSMISSION SHAFT	1
20	46T-020	GEAR	1
22	46T-022	HAND WHEEL SHAFT	1
28	46T-028	SPIRAL BEVEL GEAR	1
38	46T-038	FIX PLATE	2
42	46T-042	BRACKET	1
43	46T-043	SAHFT PLUG	1
44	46T-044	SHAFT CUP	1
45	46T-045	TURNING SHAFT	1
301	38A-038	GEAR LEVER BOSS	1
302	38A-039-1	GEAR LEVER	1
501		BEARING 51107#	2
502		BEARING 6206#	2
503		BEARING 51106#	1
504		BEARING 32024#	1
505		BEARING 32026#	1
506		BEARING NU1026#	1

STEADY REST (option)

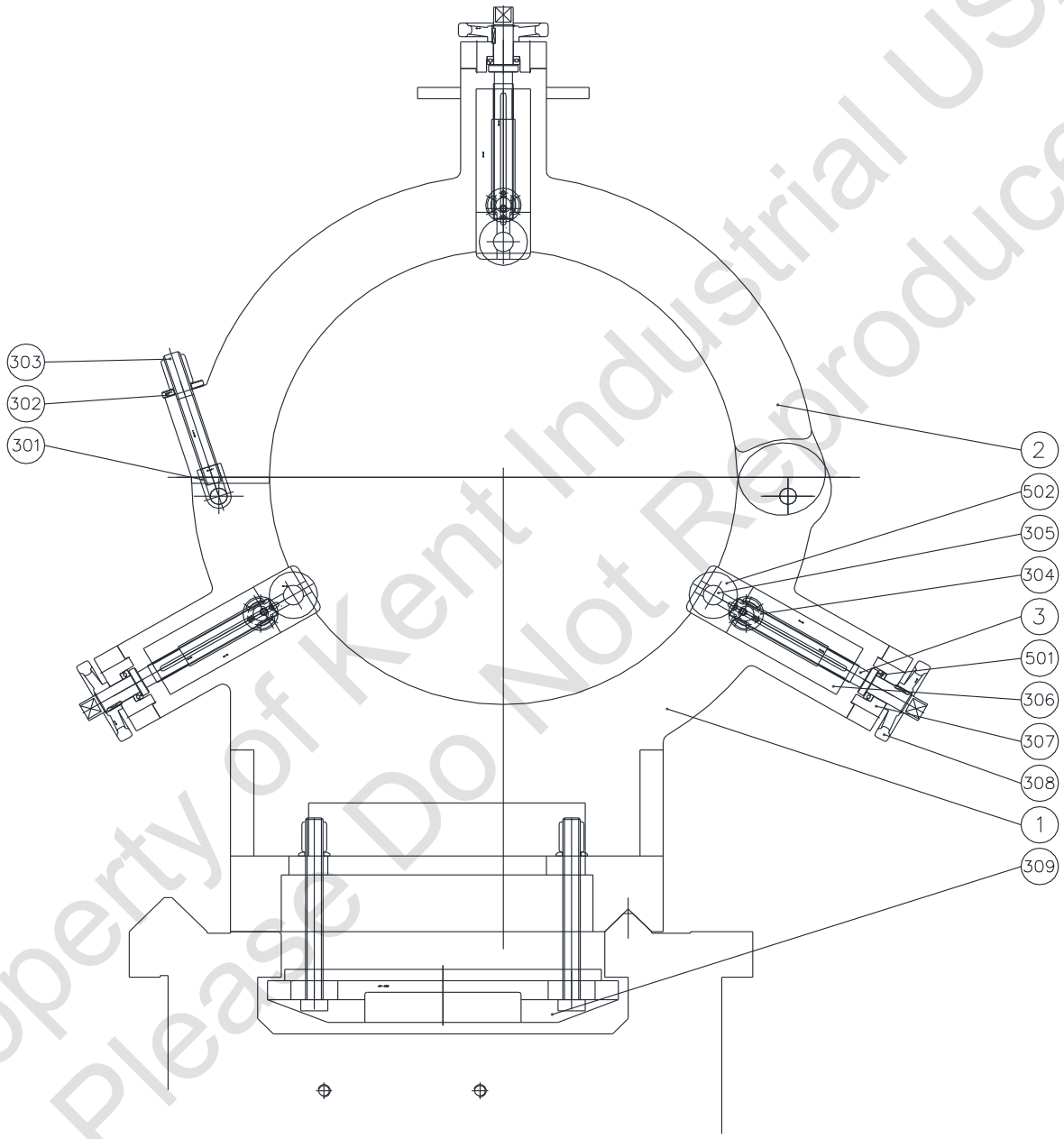

STEADY REST (option)

ITEM	PART NO	DESCRIPTION	Q TY
1	38C-001	BODY	1
2	38C-002	LEAD SCREW	1
3	38C-003	HAND WHEEL	3
4	38C-004	BRACKET	3
5	38C-005	SHAFT POST	3
6	38C-006	SHAFT	3
7	38C-007	SHAFT	3
8	38C-008	WASHER	1
9	38C-009	UP COVER	1
10	38C-010	PIN	2
11	38C-011	SCREW	1
12	38C-012	WASHER	1
13	38C-013	NUT	2
14	38C-014	HOLDING DOWN	1
15	38C-015	SCREW	2
16	38C-016	SCREW	1
17	38C-017	SCREW	2
18	38C-018	WASHER	2

COMPOUND SLIDE

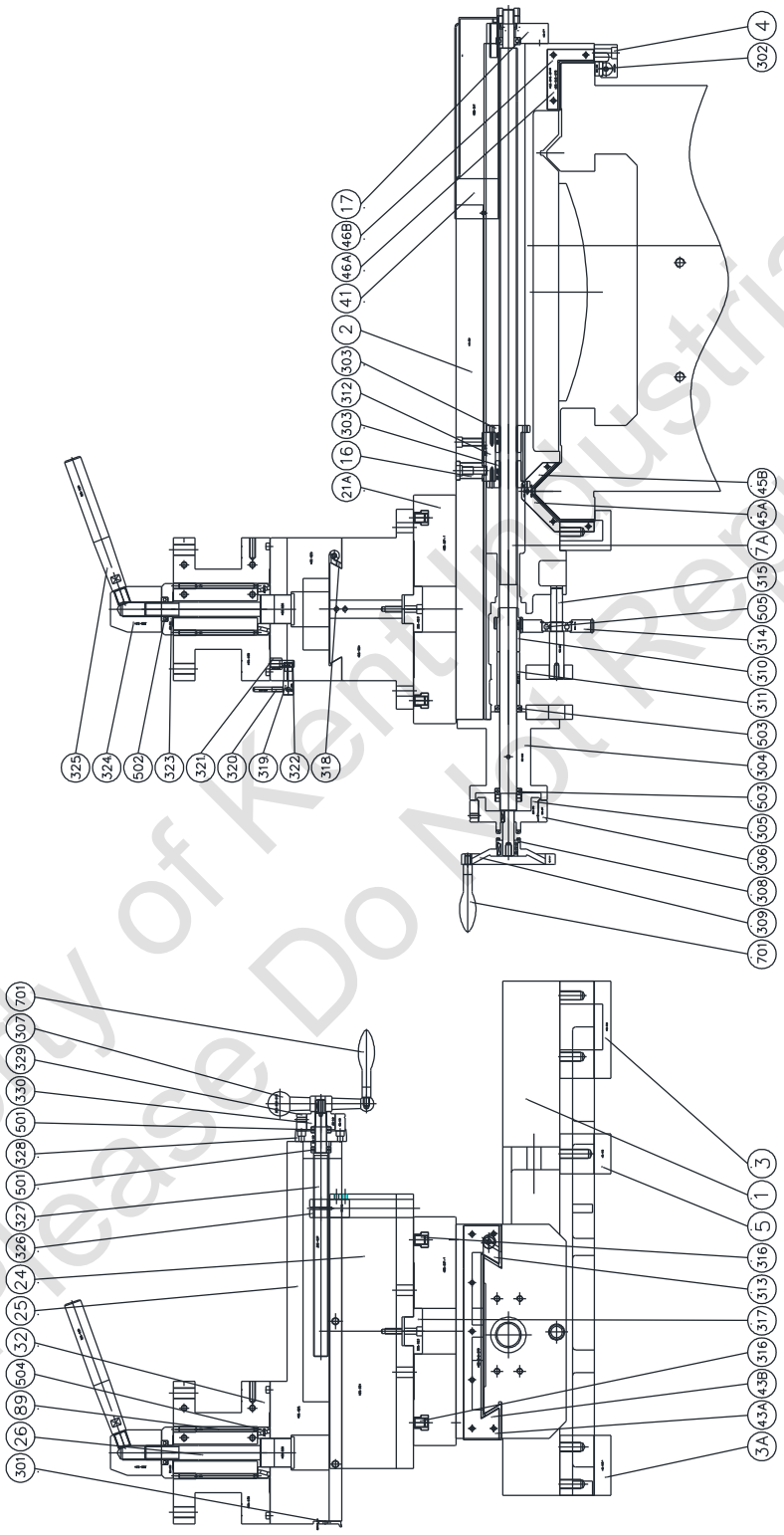

COMPOUND SLIDE

ITEM	PART NO	DESCRIPTION	Q TY
1	46S-001	CARRIAGE	1
2	46S-002	SLIDE	1
3	46S-003	SLIDER (RIGHT)	1
3A	46S-003-1	SLIDER (LEFT)	1
4	46S-004	REAR LOCK PLATE	1
5	46S-005	SET HANDLE	1
7A	46S-007-1	LEADSCREW	1
16	46S-016	NUT SET SHIFT	1
17	46S-017	REAR COVER	1
21A	46S-021-1	ROLL PLATE	1
24	46S-024	TURRET BOTTOM	1
25	46S-025	TURRET COVER	1
26	46S-026	TURRET LOCK LEVER	1
32	46S-032	4-WAY TOOL POST	1
41	46S-041	X	
43A	46S-043-01A	WIPER	1
43B	46S-043-018	WIPER COVER	1
45A	46S-045-01AL	WIPER	1
45B	46S-045-01B	WIPER COVER	1
46A	46S-046-01AR	WIPER	1
46B	46S-046-01B	WIPER COVER	1
89	46S-089	ROUND BAR	1
301	26-NCS041	WIPER	1
302	38S-006	TAPER GIB	1
303	38S-008	NUT	1
304	38S-009	BRACKET	1
305	38S-010	DIAL SLEEVE	1
306	38S-011	DIAL	1
307	38S-012-01A	HANDLE	1
308	38S-012-02A	HANDWHEEL	1
309	38S-012-028	TOOTH FLANK	1
310	38S-013-1	SLIDE GEAR	1
311	38S-014-1	SLIDE HABD WHEEL SHAFT	1
312	38S-015	NUT BRACKET	1
313	38S-018	TAPER GIB	1
314	38S-019	GEAR	1
315	38S-020	GEAR SHAFT	1
316	38S-022	SLIDE NUT	1
317	38S-023	SET SHAFT	1
318	38S-027	TAPER GIB	1

320	38S-028	GEAR SHAFT	1
321	38S-030	SHAFT SLEEVE	1
322	38S-031	SET POSITION SHAFT	1
323	38S-033	SPACER	1
324	38S-034	BOSS	1
325	38S-035	HANDLE	1
326	38S-036	BRASS SLEEVE	1
327	38S-037	SCREW	1
328	38S-038	BRACKET	1
329	38S-039	DIAL	1
330	38S-040	SHAFT SLEEVE	1
501		BEARING 51104	1
502		BEARING 51105	1
503		BEARING 51106	1
504		BEARING 30210	1
505		BEARING 6304	1

COMPOUND SLIDE WITH TAPER ATTACHMENT (option)

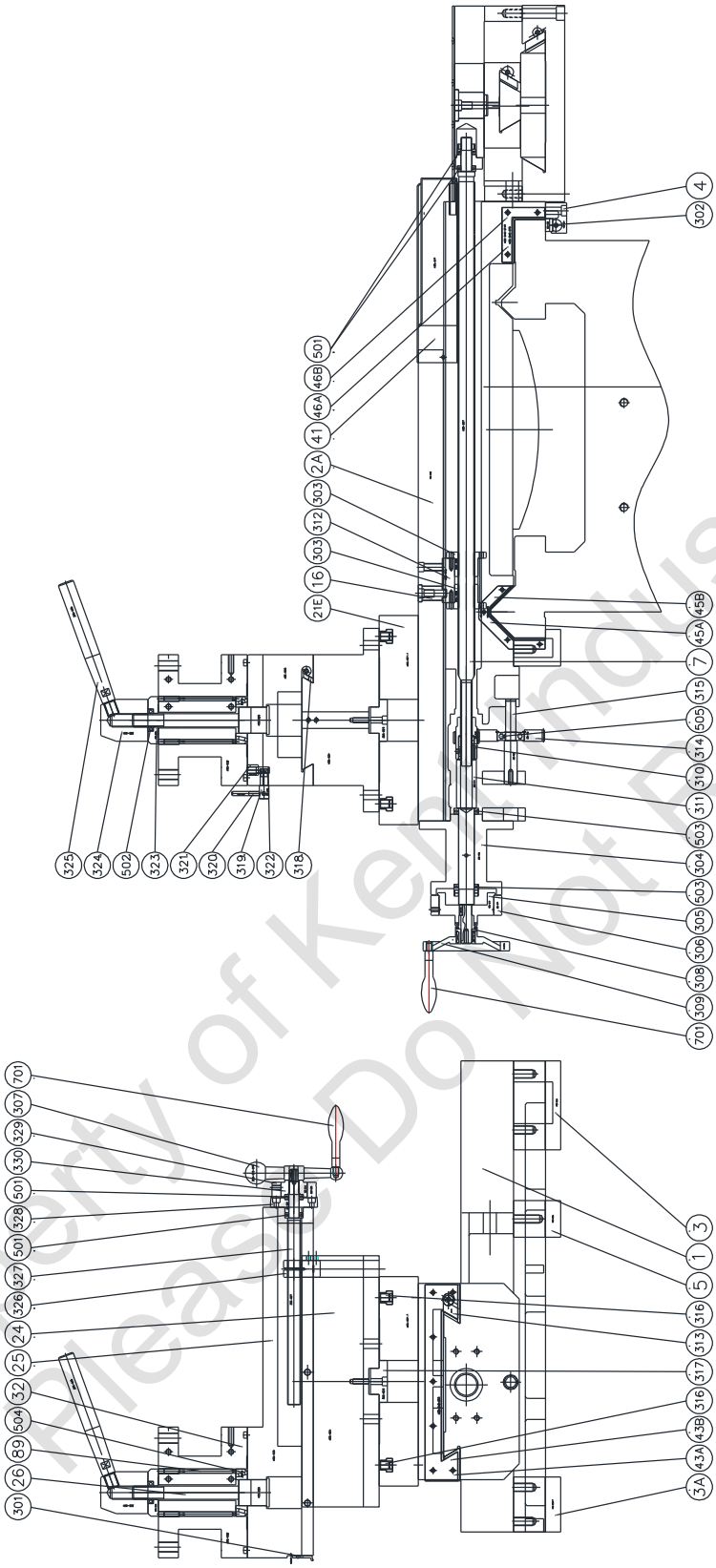

COMPOUND SLIDE WITH TAPER ATTACHMENT (option)

ITEM	PART NO	DESCRIPTION	Q TY
1	46S-001	CARRIAGE	1
2A	46S-002-1	SLIDE	1
3	46S-003	SLIDER (RIGHT)	1
3A	46S-003-1	SLIDER (LEFT)	1
4	46S-004	REAR LOCK PLATE	1
5	46S-005	SET HANDLE	1
7	46S-007	LEADSCREW	1
16	46S-016	NUT SET SHIFT	1
21E	46S-021-5	ROLL PLATE	1
24	46S-024	TURRET BOTTOM	1
25	46S-025	TURRET COVER	1
26	46S-026	TURRET LOCE LEVER	1
32	46S-032	4-WAY TOOL POST	1
41	46S-041	X	
43A	46S-043-01A	WIPER	1
43B	46S-043-018	WIPER COVER	1
45A	46S-045-01AL	WIPER	1
45B	46S-045-01B	WIPER COVER	1
46A	46S-046-01AR	WIPER	1
46B	46S-046-01B	WIPER COVER	1
89	46S-089	ROUND BAR	1
301	26-NCS041	WIPER	1
302	38S-006	TAPER GIB	1
303	38S-008	NUT	1
304	38S-009	BRACKET	1
305	38S-010	DIAL SLEEVE	1
306	38S-011	DIAL	1
307	38S-012-01A	HANDLE	1
308	38S-012-02A	HANDWHEEL	1
309	38S-012-028	TOOTH FLANK	1
310	38S-013	SLIDE GEAR	1
311	38S-014	SLIDE HABD WHEEL SHAFT	1
312	38S-015	NUT BRACKET	1
313	38S-018	TAPER GIB	1
314	38S-019	GEAR	1
315	38S-020	GEAR SHAFT	1
316	38S-022	SLIDE NUT	1
317	38S-023	SET SHAFT	1
318	38S-027	TAPER GIB	1
320	38S-028	GEAR SHAFT	1

321	38S-030	SLEEVE	1
322	38S-031	SET SHAFT	1
323	38S-033	SPACER	1
324	38S-034	BOSS	1
325	38S-035	HANDLE	1
326	38S-036	BRASS SLEEVE	1
327	38S-037	SCREW	1
328	38S-038	BRACKET	1
329	38S-039	DIAL	1
330	38S-040	SHAFT SLEEVE	1
501		BEARING 51104	1
502		BEARING 51105	1
503		BEARING 51106	1
504		BEARING 30210	1
505		BEARING 6304	1

TAPER ATTACHMENT (option)

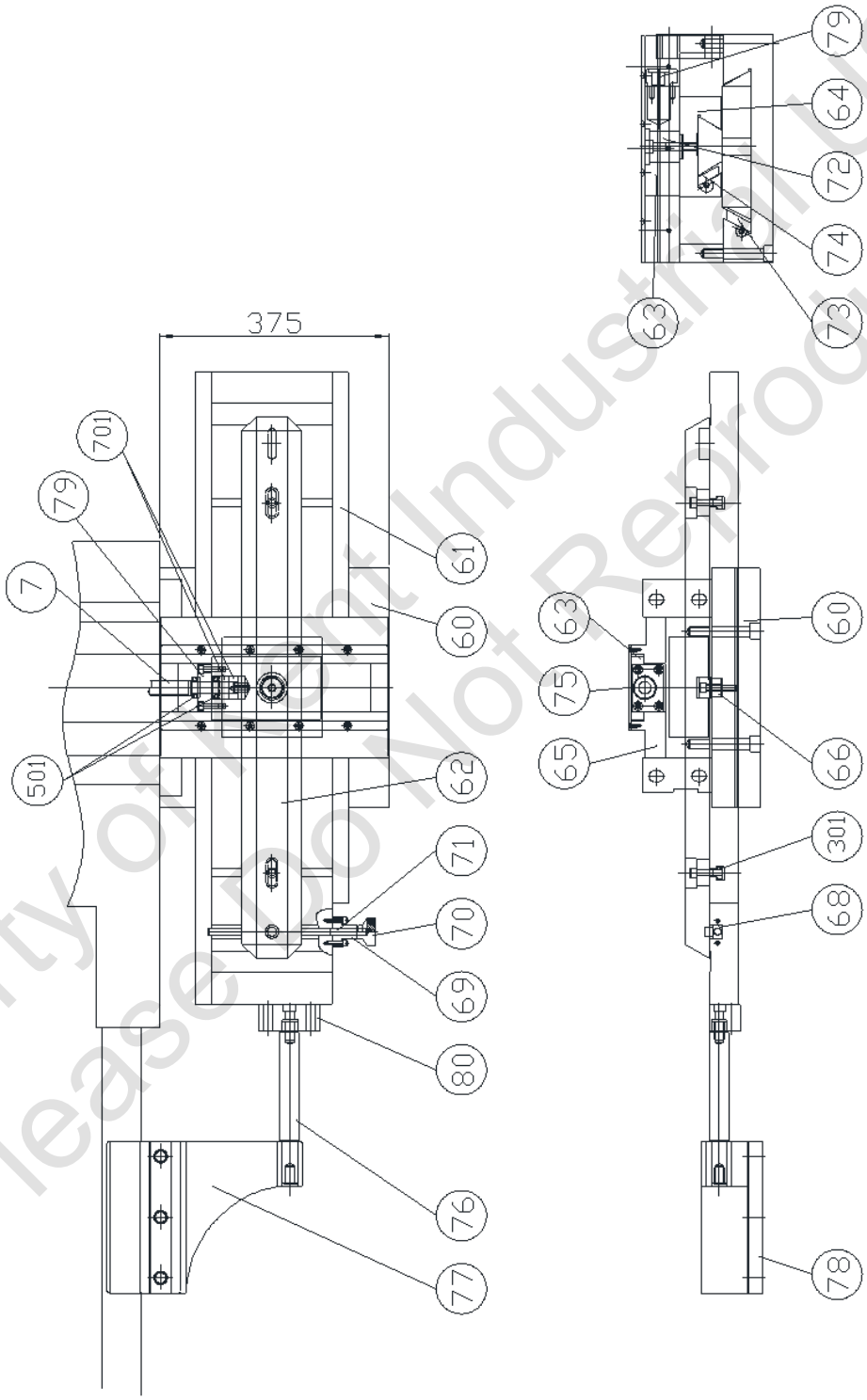

TAPER ATTACHMENT (option)

ITEM	PART NO	DESCRIPTION	Q TY
60	38S-060	MAIN BODY	1
61	38S-061	MAIN SLIDE	1
62	38S-062	ADJUSTING SLIDE	1
63	38S-063	UPPER SLIDE BLOCK	1
64	38S-064	LOWER SLIDE	1
65	38S-065	UPPER SLIDE	1
66	38S-066	UPPER SUPPORTING	1
67	38S-067	LOCKING PLATE	1
68	38S-068	ADJUSTING NUT	1
69	38S-069	ADJUSTING FIX BASE	1
70	38S-070	ADJUSTING RING	1
71	38S-071	RACK	1
72	38S-072	LOWER SUPPORTING	1
73	38S-073	SLANTING TIP	1
74	38S-074	SLANTING TIP	1
75	38S-075	COVER	1
76	38S-076	DRAW BAR	1
77	38S-077	DRAW BAR BASE	1
78	38S-078	CUSHION	1
79	38S-079	FIX BLOCK	1
80	38S-080	FIX BLOCK	1
81	26NCS-044	T-NUT	1

HYDRAULIC COPY DEVICE (Option)

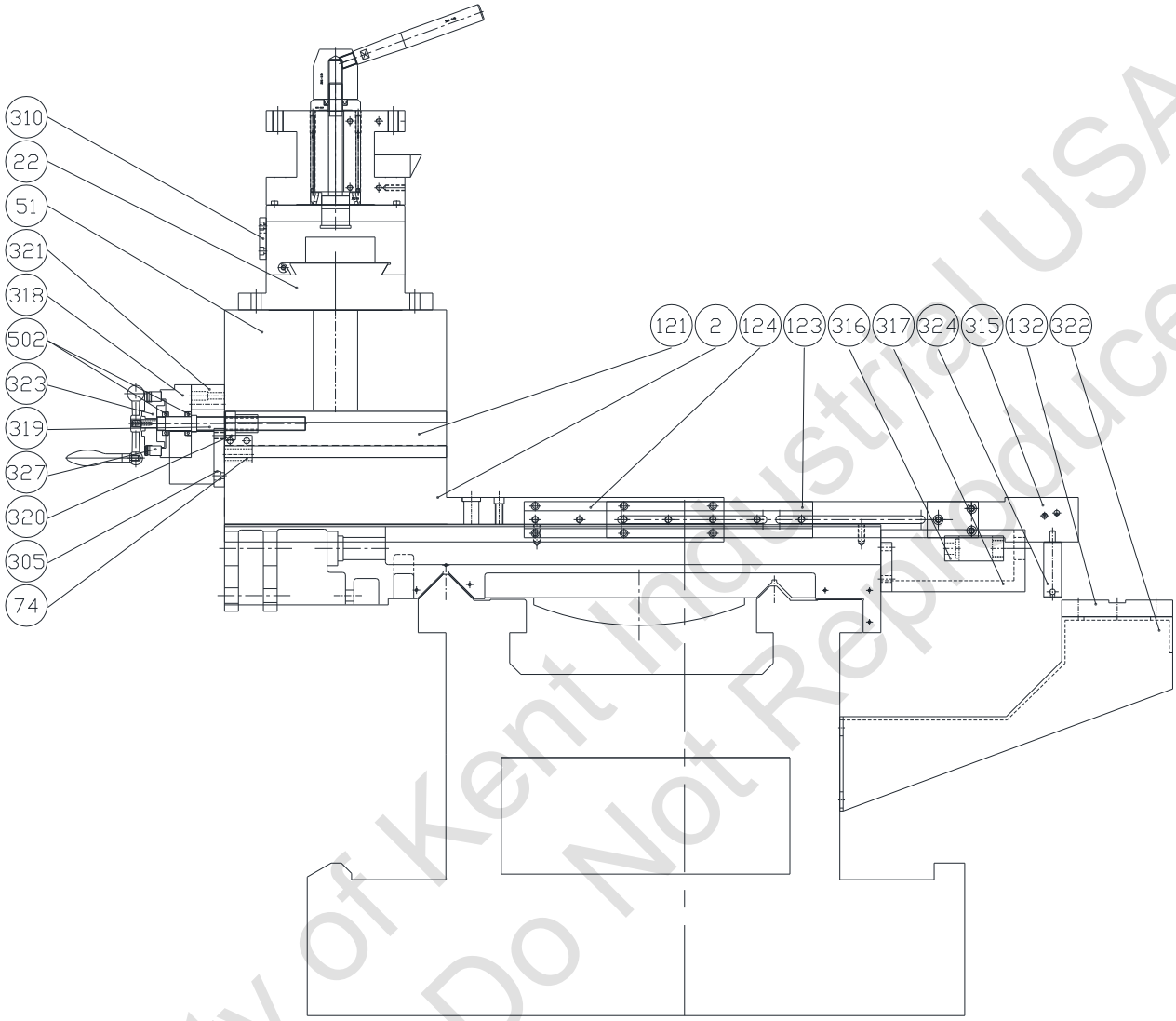

HYDRAULIC COPY DEVICE (Option)

ITEM	PART NO	DESCRIPTION	Q TY
2	ADS-002-003	Cross slide	1
22	ADS-022-002	Compound base	1
51	ADS-051-005	Roll plate	1
74	ADS-074-001	Fixed base	1
121	ADS-121-001	Copy adjust slide	1
123	ADS-123-001	Flexible plate	1
124	ADS-124-001	Flexible pallet	1
132	ADS-132-001	Copy fixed plate	1
305	ACS-081-001	Lead screw	1
310	ACS-096-001	Cylinder bracket	1
315	ACS-122-001	Fixed base	1
316	ACS-125-001	Extension arm	1
317	ACS-126-001	Adapter boss	1
318	ACS-127-001	Cylinder bracket	1
319	ACS-128-001	Bracket	1
320	ACS-129-001	Screw	1
321	ACS-130-001	Brass nut	1
322	ACS-131-001	Spacer	1
323	ACS-133-001	Dial sleeve	1
324	ACS-135-001	Touch bar	1
327	AAS-016-N01	Dial	1
502		Bearing 51105	1

6-WAY RAPID TRAVERSE (Option)

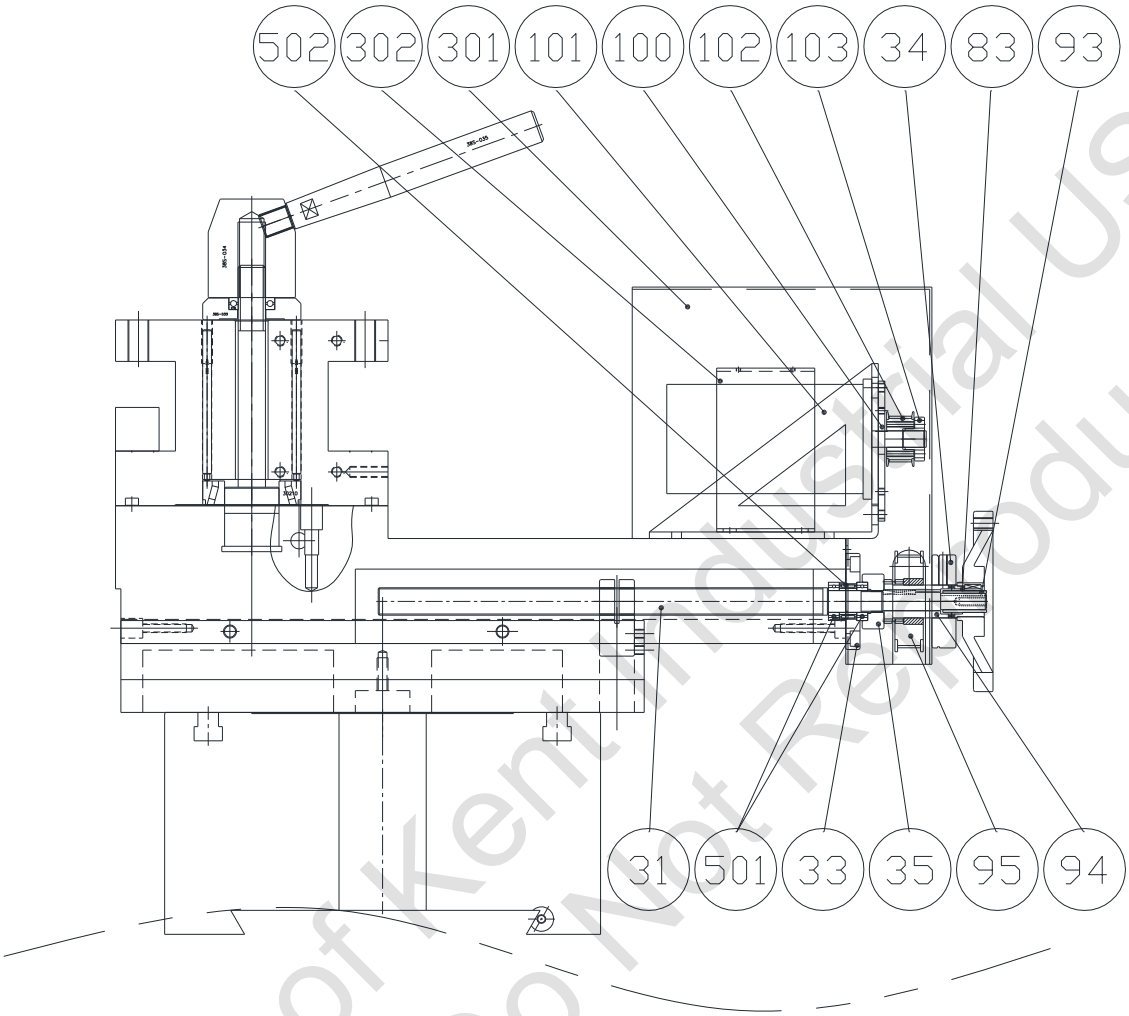

6-WAY RAPID TRAVERSE (Option)

ITEM	PART NO	DESCRIPTION	Q TY
31	ACS-031-N02	Lead screw	1
33	ACS-033-002	Bracket	1
34	ACS-034-N02	Dial	1
35	ACS-035-002	Sleeve	1
83	ACS-083-002	Clutch	1
93	ACS-093-001	Ring	1
94	ACS-094-001	Clutch	1
95	ACS-095-001	Pulley	1
100	ACS-100-001	Fixed plate	1
101	ACS-101-001	Motor Bracket	1
102	ACS-102-001	Timing pulley	1
103	ACS-103-001	Tapered lock bush	1
301	ACE-070-001	Motor cover	1
302	ACE-071-001	Cable bracket	1
501		Bearing 51104	1
502		Bearing (TAF243216 LRT202416)	1

FOLLOW REST (Option)

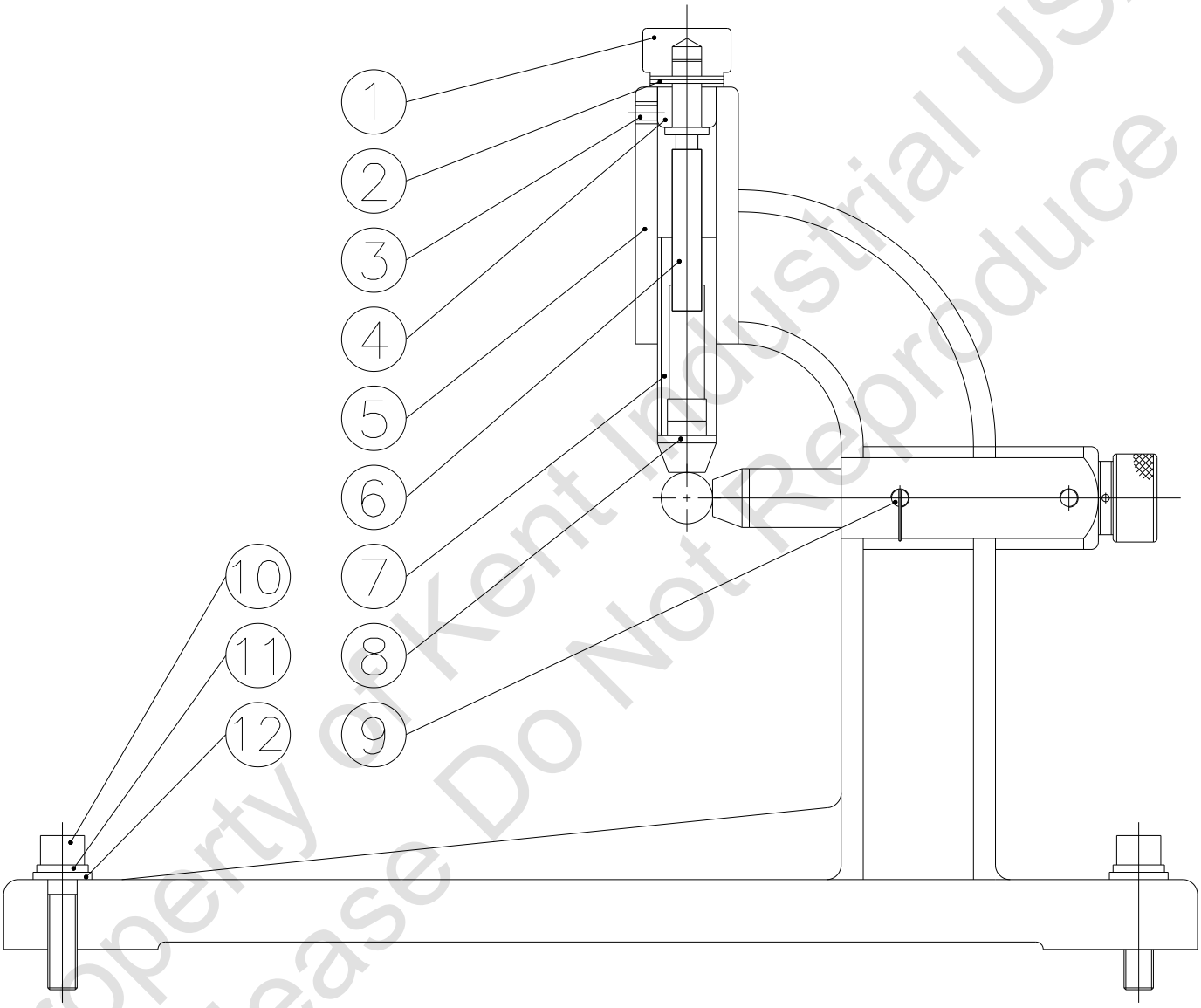

FOLLOW REST (Option)

ITEM	PART NO	DESCRIPTION	Q TY
1	38S-081	HANDLE	2
2	38S-082	PIN	2
3	38S-083	SET SCREW	2
4	38S-084	WASHER	2
5	38S-085	CSATION	1
6	38S-086	LEAD SCREW	2
7	38S-087	SHAFT	2
8	38S-088	BUSH	2
9	38S-089	SET SCREW	2
10	38S-090	SCREW	2
11	38S-091	WASHER	2
12	38S-092	WASHER	2

HYDRAULIC REAR SUPPORTING STAND (Option)

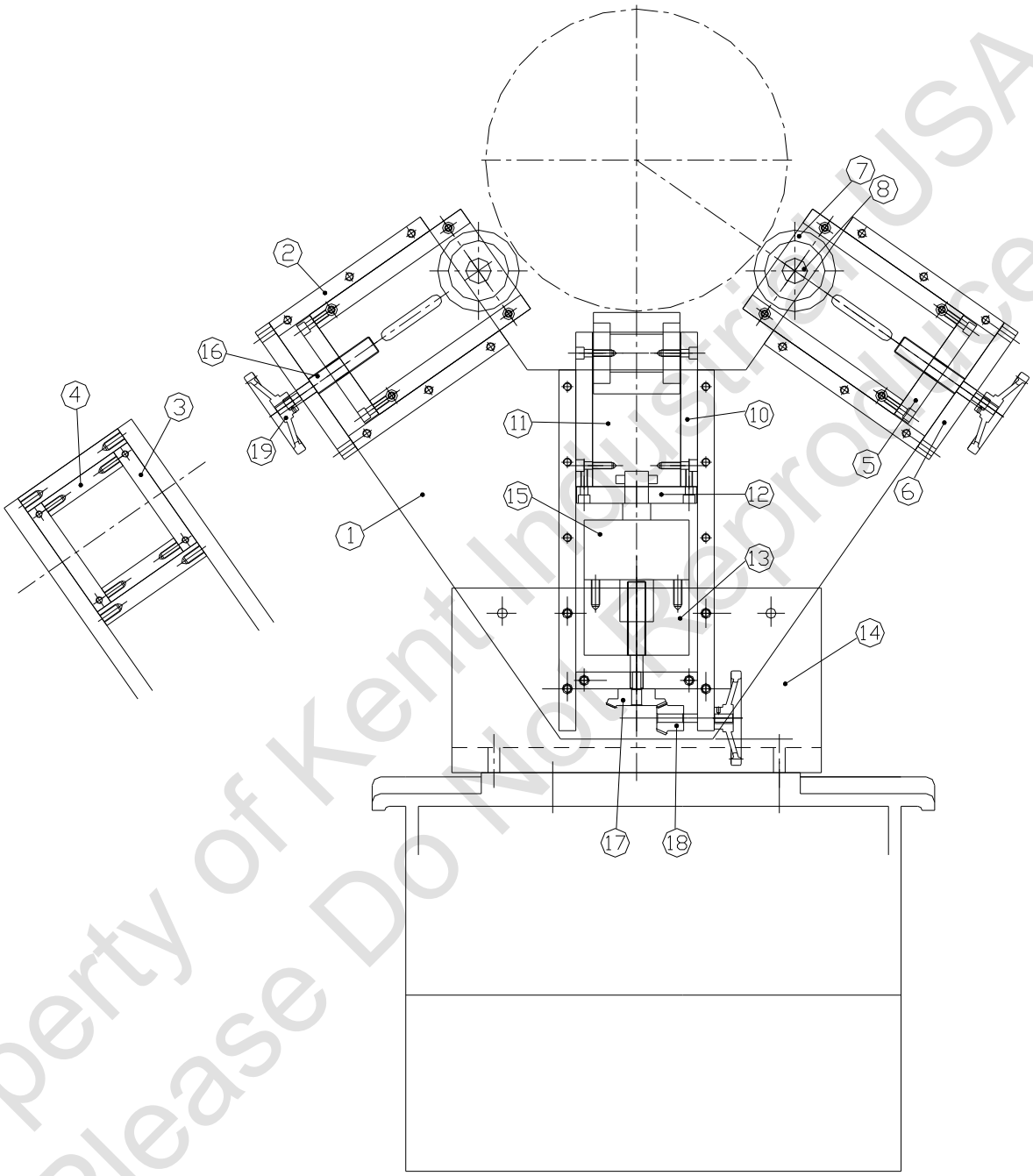

HYDRAULIC REAR SUPPORTING STAND (Option)

ITEM	PART NO	DESCRIPTION	Q TY
1	38CF-001	Lathe bed	2
2	38CF-002	Fixed place	8
3	38CF-003	Fixed place	4
4	38CF-004	Slide	4
5	38CF-005	Nut place	2
6	38CF-006	Suppport place	2
7	38CF-007	Rolling cam	3
8	38CF-008	Spindle	3
9	38CF-009	Suppport place	1
10	38CF-010	Fixed place	2
11	38CF-011	Slide	2
12	38CF-012	Suppport place	1
13	38CF-013	Nut place	1
14	38CF-014	Foundation	2
15	38CF-015	Hydraulic cylinder	1
16	38CF-016	Lead screw	3
17	38CF-017	Umbrella geae	1
18	38CF-018	Umbrella geae	1
19	38CF-019	Hand wheel	1