OPERATION MANUAL

PRECISION SURFACE GRINDER

MODEL : SGS-2040AH
SGS-2040AHD
SGS-2060AH
SGS-2060AHD
SGS-S2460AH
SGS-S2460AHD

0104V04

CONTENTS

*THIS MACHINE HAS BEEN FULLY TESTED, ADJUSTED AND INSPECTED FOR CORRECT ALIGNMENT AND OPERATION PRIOR TO SHIPMENT. IN TRANSIT OR INSTALLATION, PLEASE ENSURE THAT THE MACHINE IS NOT BUMPED WHEN BEING ROLLED OR SET DOWN TO AVOID ANY FAILURE.

A). Transition

By Fork Lifter

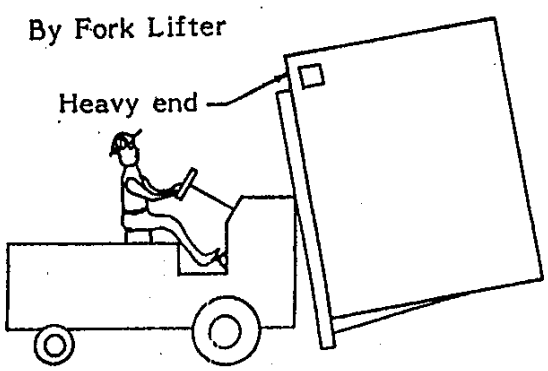

By Hoist or Chain Block

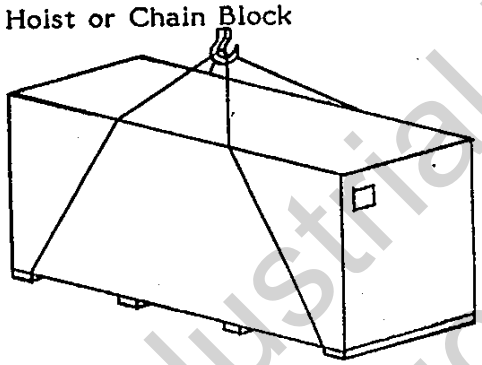

Net Weight : 2040AH,AHD 5000kgs 11000lbs
2060 AH,AHD 5850 kgs 12870 lbs

B). Unpacking

1). When unpacking the crate, starts from the upper cover, then follow the sequence of front, rear, left and right.

2). Do not use hammer to break down the crate, please use nail extruder in stead of.

3). To avoid damaging the machine or paint, please pay more attention when take away the wooden cover.

4). Loosen the fixing screws before lifting machine, see figure a and b.

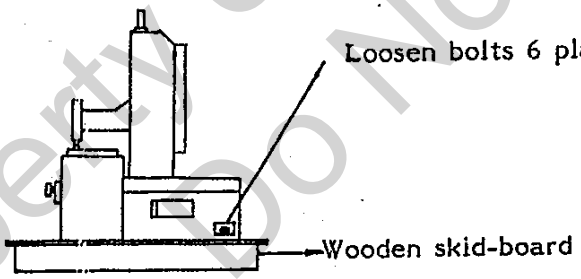

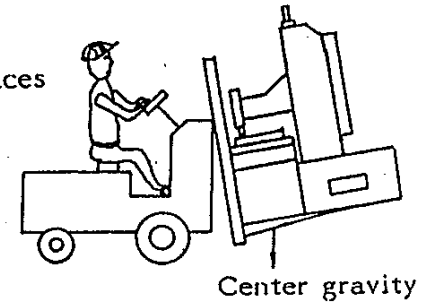

5). Center gravity of machine

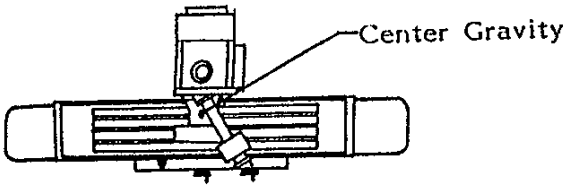

* CAUTION: Do not use Hoist to lift up these column movement type of machine, use Fork Lifter all the time.

). Packing diagram

PACKING DIAGRAM

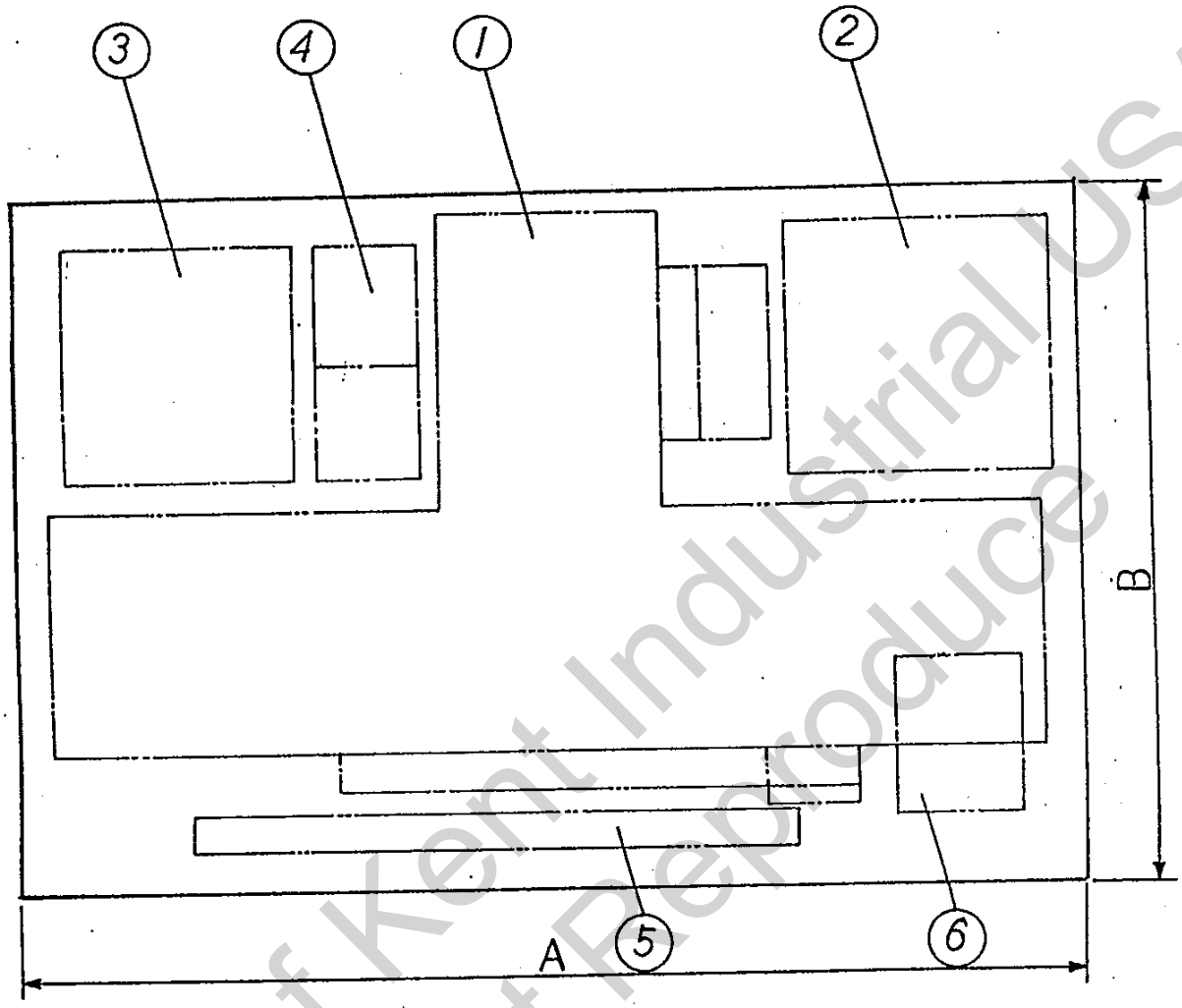

M/C Type	2040AH(D)	2060AH(D)
A	138"	181.5"
B	92"	92"

1. Machine Base
2. Hydraulic Tank
3. Coolant Tank
4. Standard Accessories
5. Dust Shield
6. Optional Accessories and Wheel

C). Choice of site

The output of the machine and the degree of accuracy of the components produced depend to a very special degree on the correct choice of site for the erection of the machine.

The grinding machine should be handled just as carefully as a jig-borer. After all, extreme precision is demanded of both types of machine.

Grinding machines are often found between milling, shaping, drilling and even slotting machines, without any thought of the consequences of such planning. In such cases , it is impossible to achieve good surface finishes, as the vibrations from the milling machines or the jerks from the reversal of the shaper stroke etc. are transmitted to the grinding machine. Chatter marks can be found on the ground surface, which are due to these extraneous influences.

Unsolid floor is unsuitable for taking the machine as it results in distortion of the machine bed.

(1). 2040 AH(AHD) Floor plan

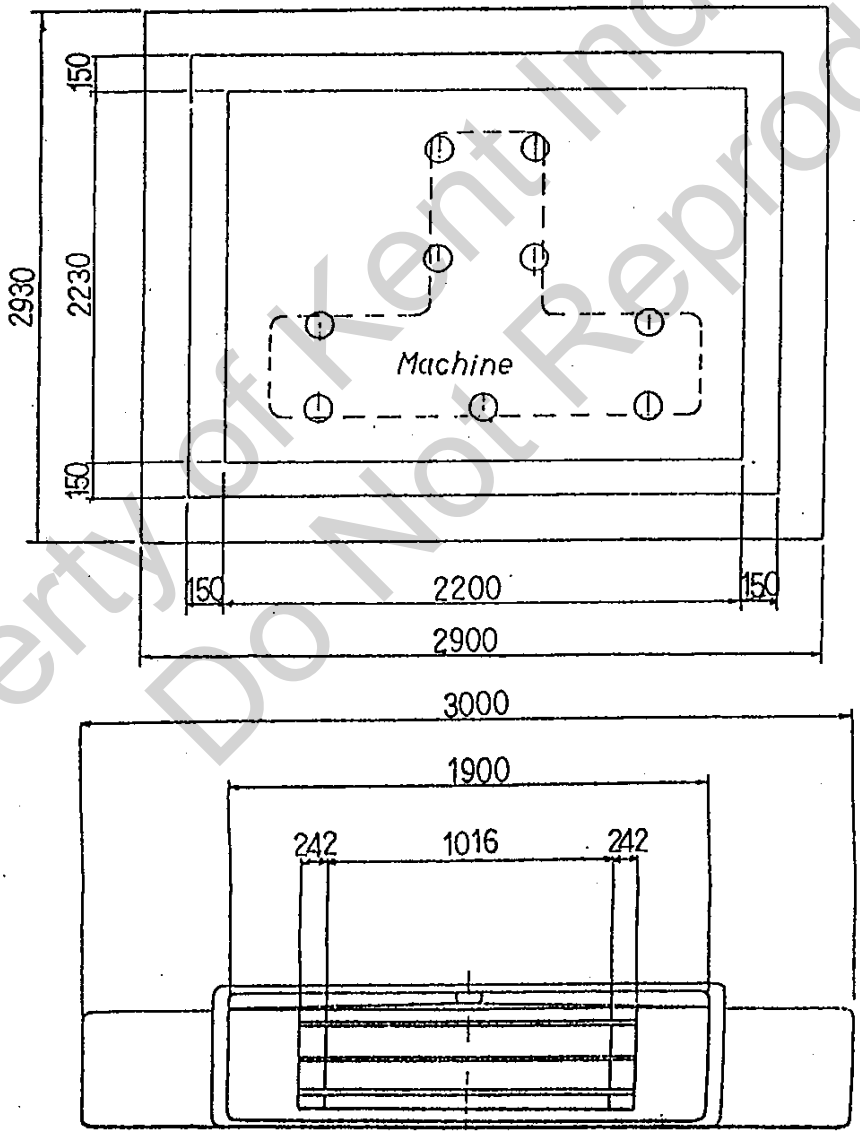

Working Table

(2). 2060 AH(AHD) Floor plan

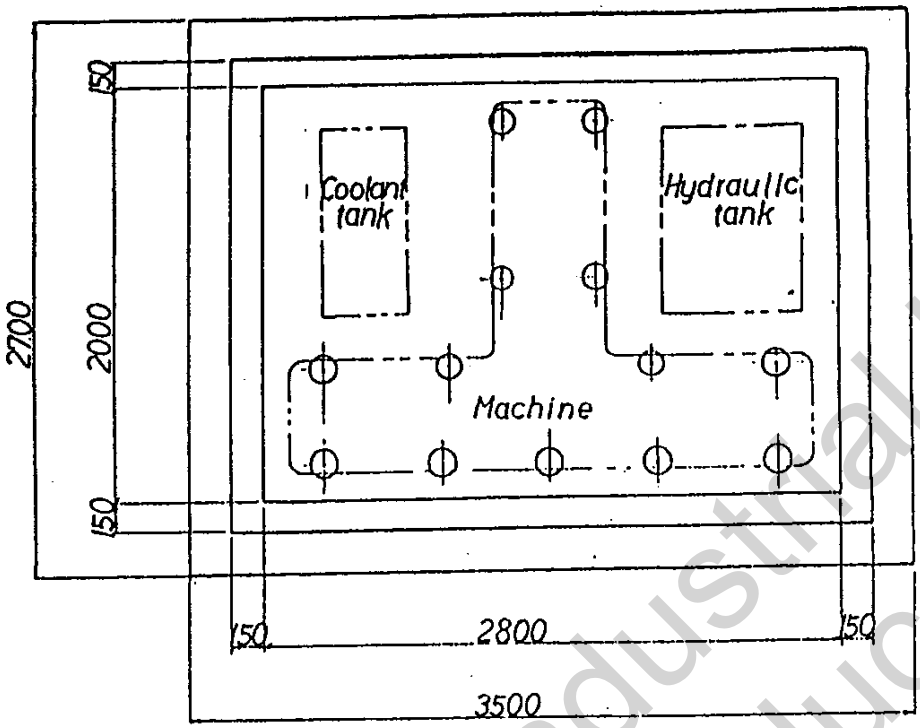

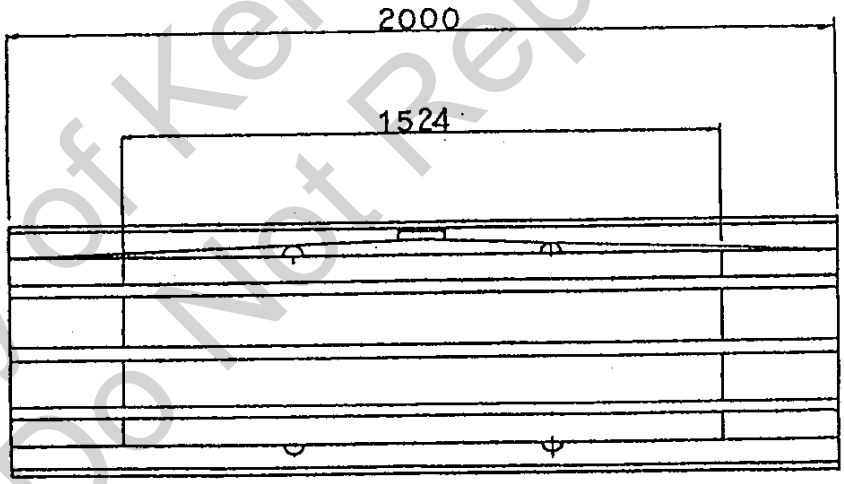

Working Table

(1).2040 Series Foundation Diagram

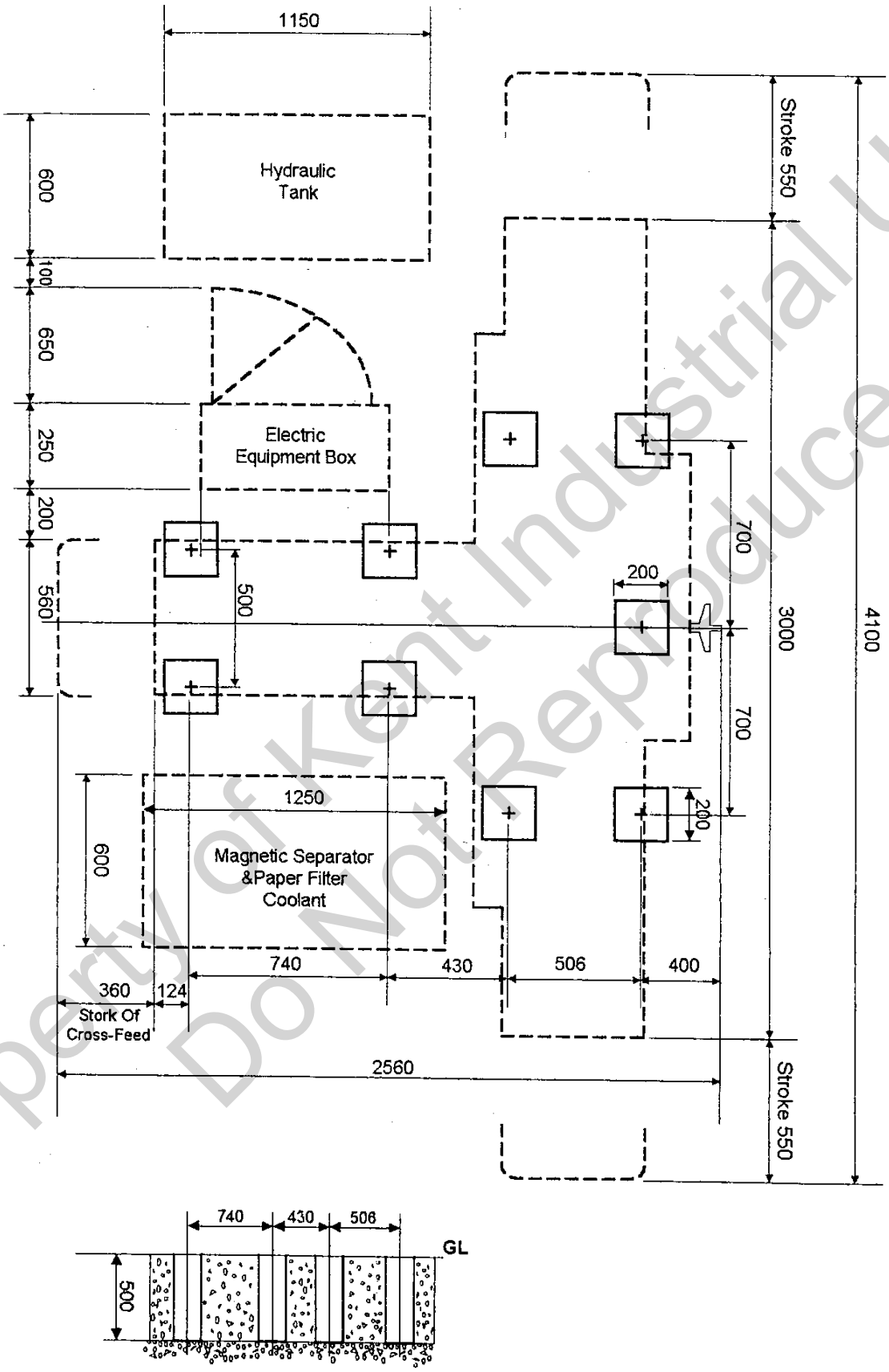

(2).2060 Series Foundation Diagram

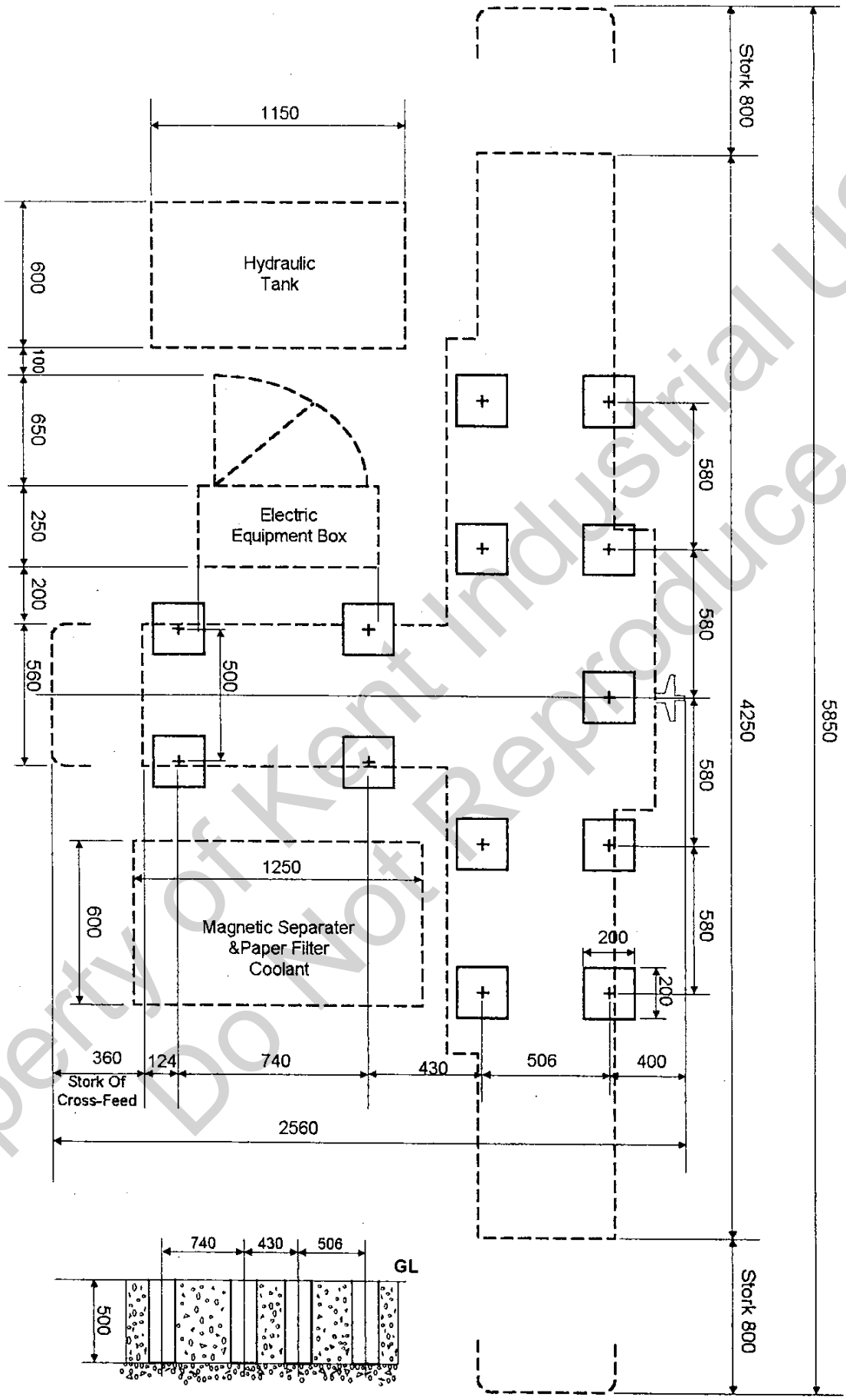

D). Installation

(1). Power consumption

2040AH.2040AHD. Total:12.5KW

2060AH,2060AHD Total:1 .5KW

(2). Foundation

a. Use the anchor bolts

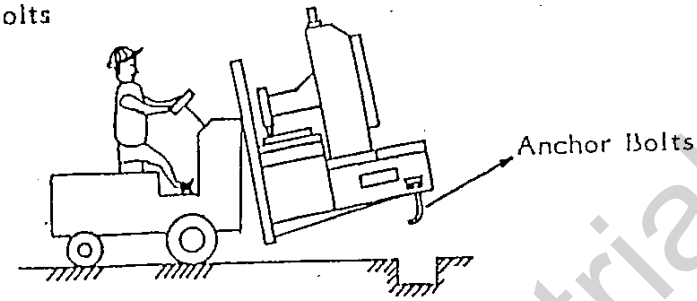

* Lock the anchor bolts on the machine by nut, and let the thread portion at least 35mm for adjust.
* Lay down the machine slowly to aim anchor bolts at foundation holes.
* Levelling the machine by taper block.
* Fill up the holes with concrete.

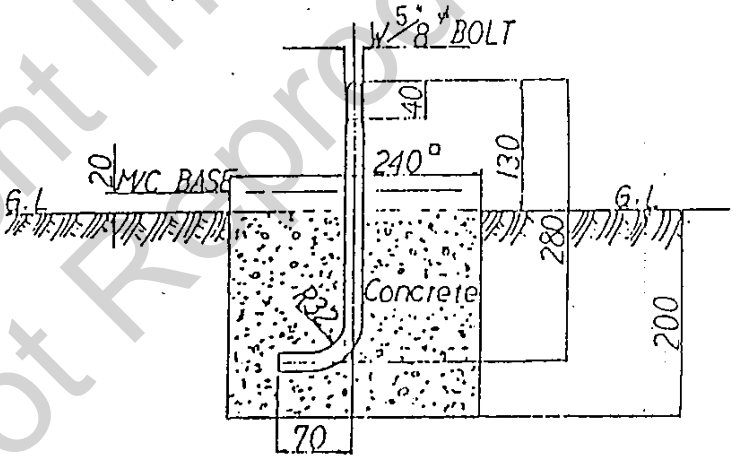

b. Use the levelling pads and screws

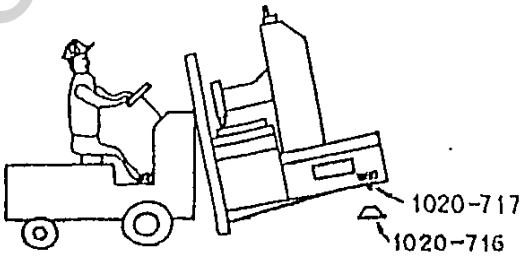

* Screw the levelling screws(1020-717) on the machine base with 2 nuts. For easy levelling and more steady of the machine , make screws as deep as possible.
* Lay down the machine slowly, to let the round head of levelling screws fall into the center hole of levelling pad (1020-716).
* Levelling the machine.

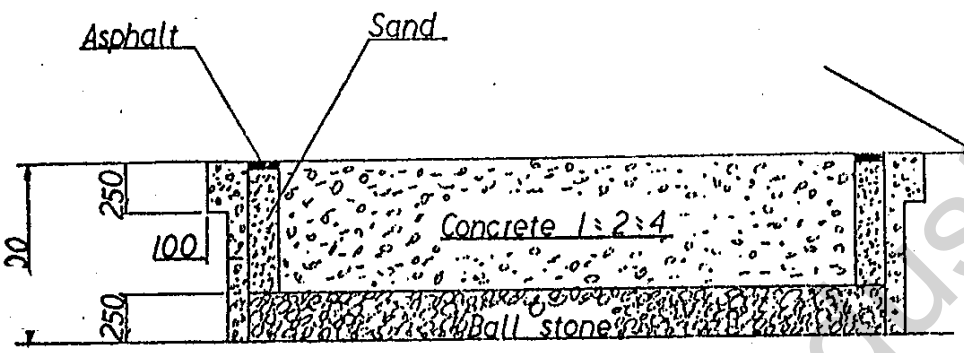

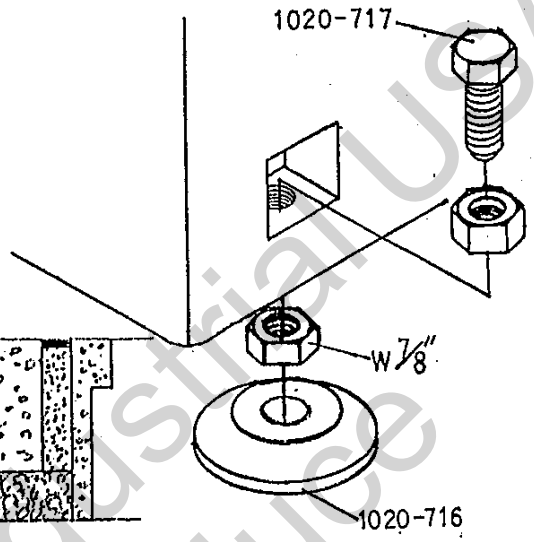

(3). Levelling the machine

As following procedures:

1. Use longitudinal handwheel to let table at the middle position.
2. Levelling the machine by a Spirit Level in longitudinal and latitudinal position.

In this case, we suggest:

a. Screwing up the levelling bolts #1,3,4,7,8, and adjust machine's levelling by use bolts #2,5,6,9, only. (Fig. A).

b. After levelled, then drive table to the left end and adjust levelling bolts #1,7,8, (Fig. B).

c. Drive table to the right end and adjust levelling bolts #3,4, (Fig. C,D)

d. Drive table back to the middle position and re-check.

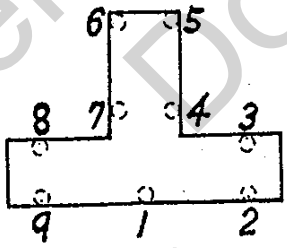

Fig. A

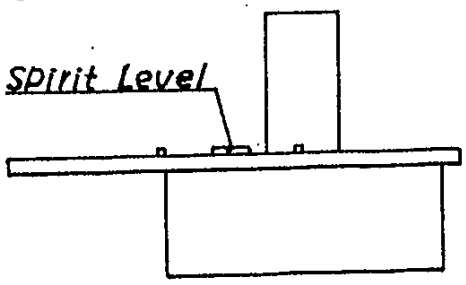

Fig. B

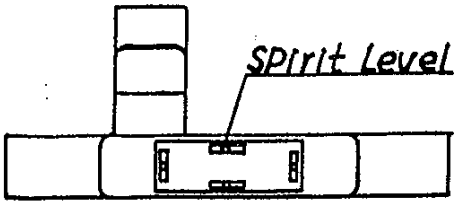

Fig. C

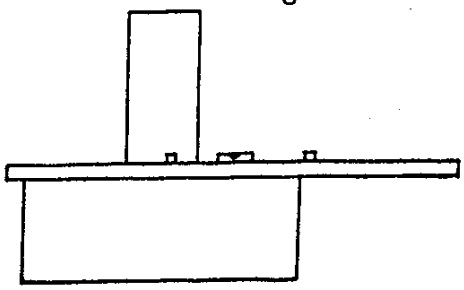

Fig. D

(4). Contour and Nomenclature

a. 2040, 2060 AH

2040,2060AH CONTOUR AND NOMENCLATURE

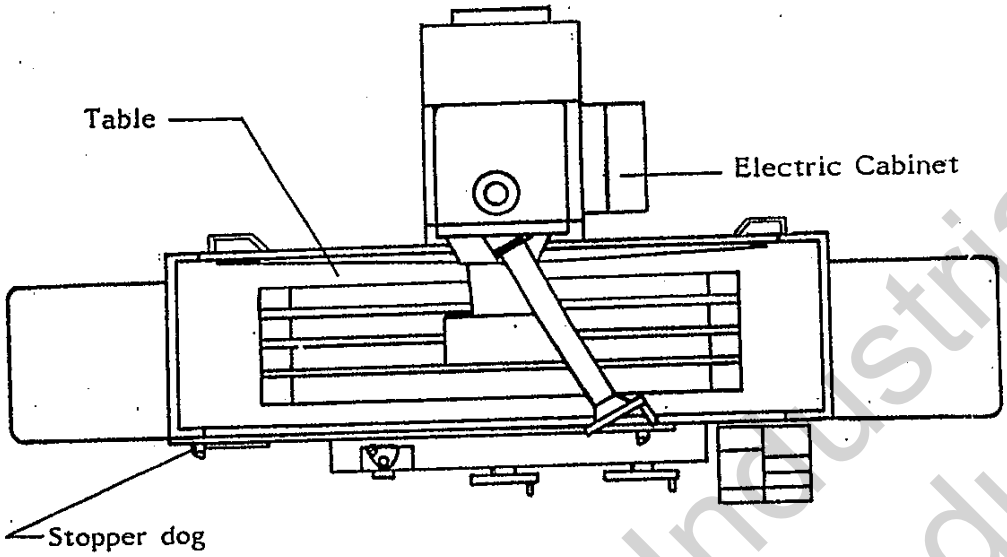

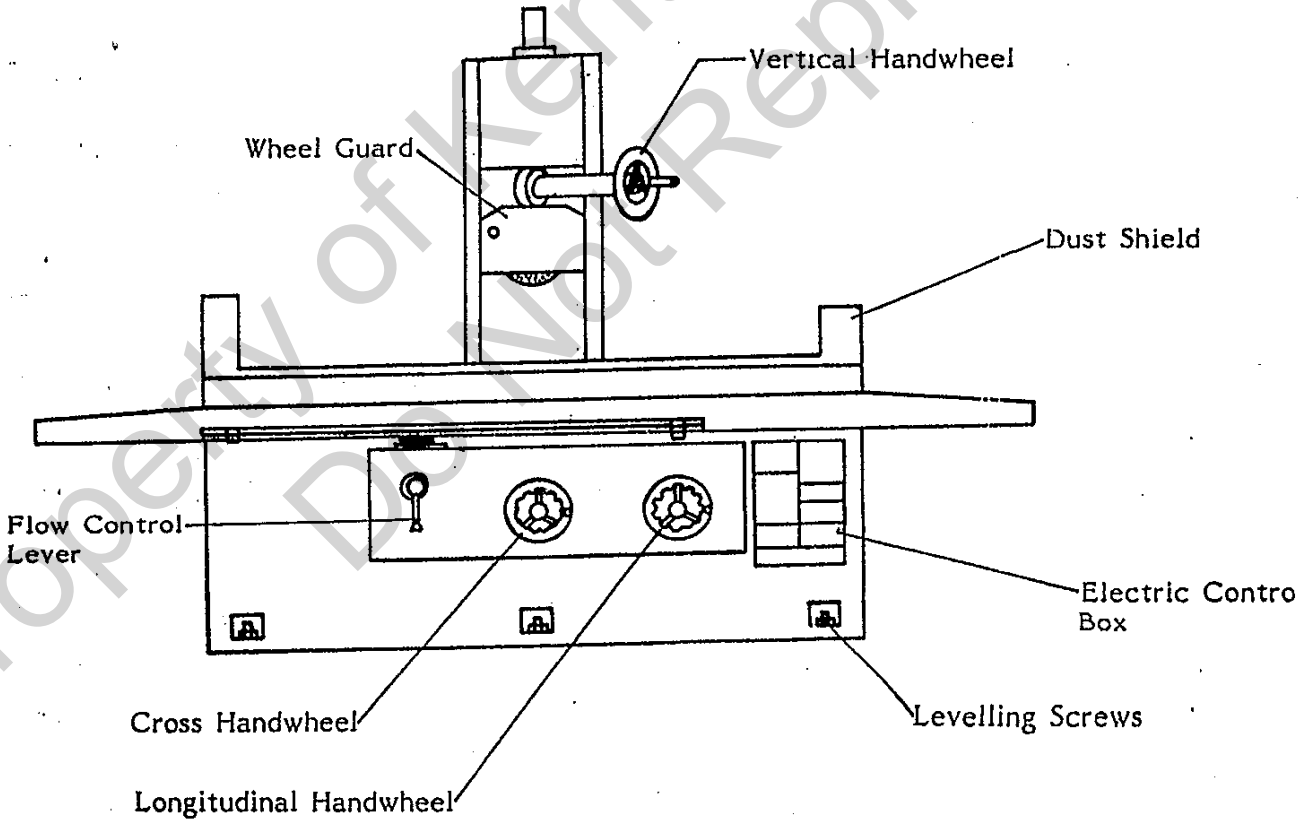

b. 2040,2060 AHD

2040,2060AHD CONTOUR AND NOMENCLATURE

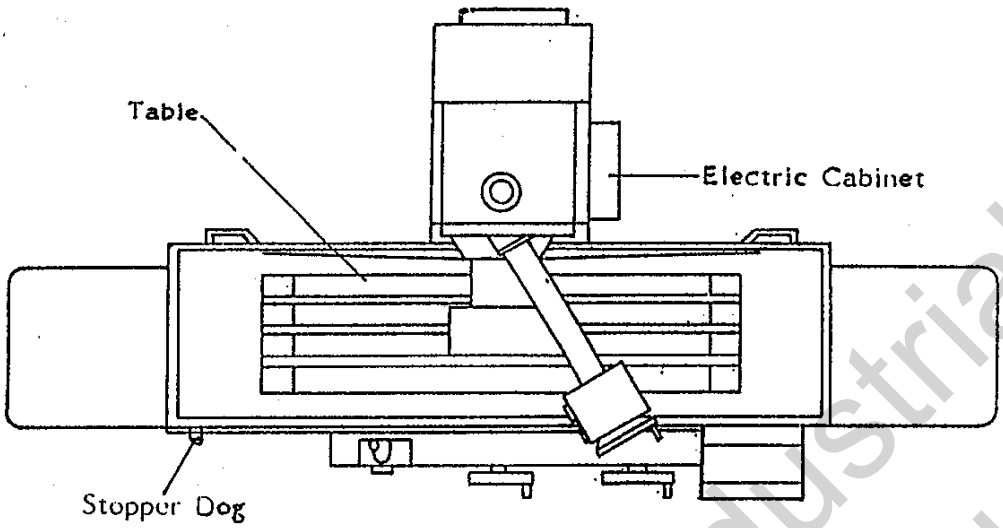

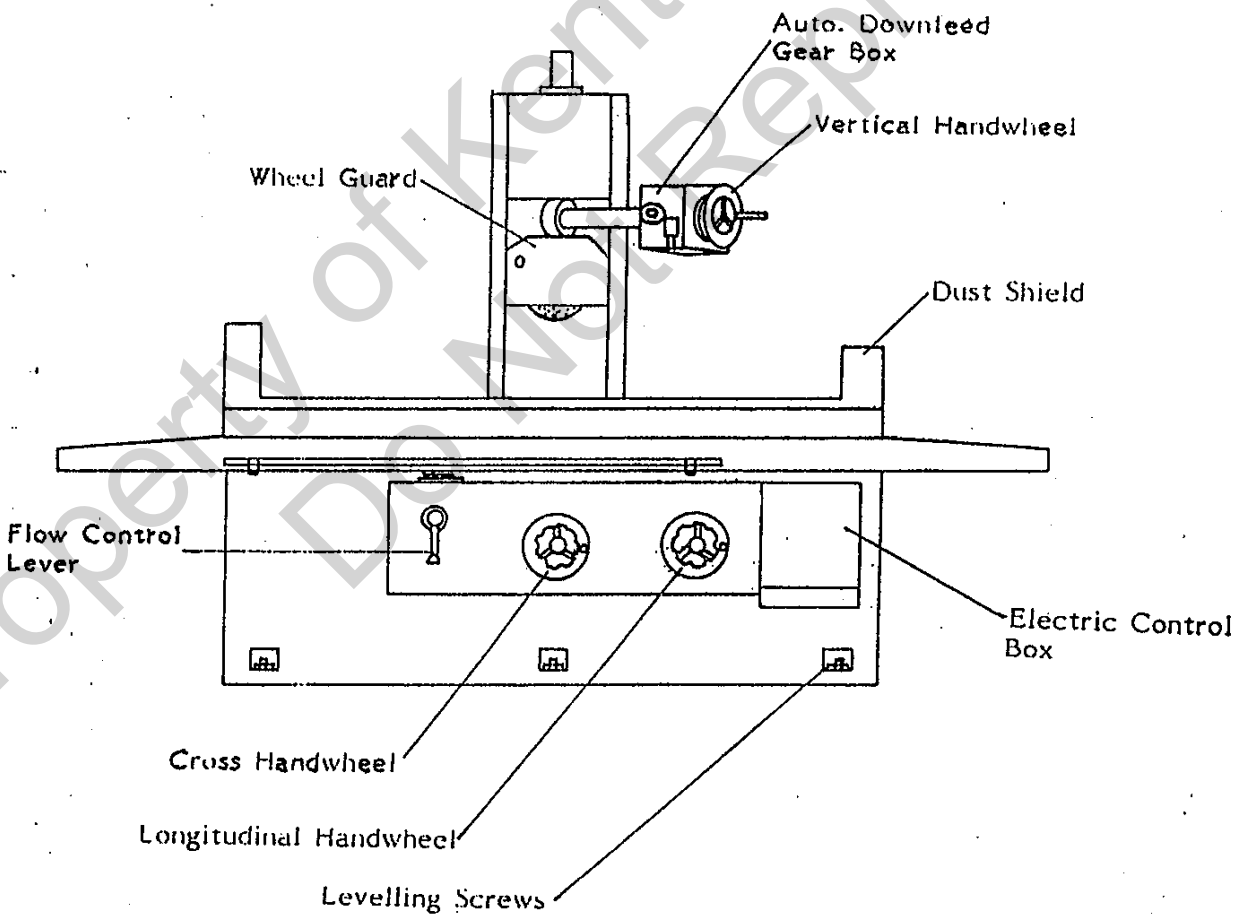

(5). Table size and grinding capacity

2040 AH(AHD)

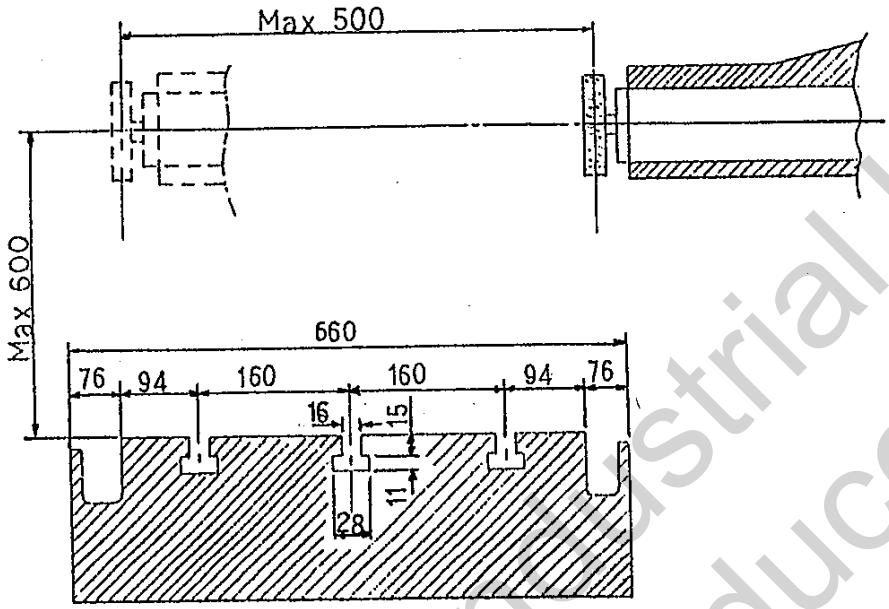

b. 2060 AH(AHD)

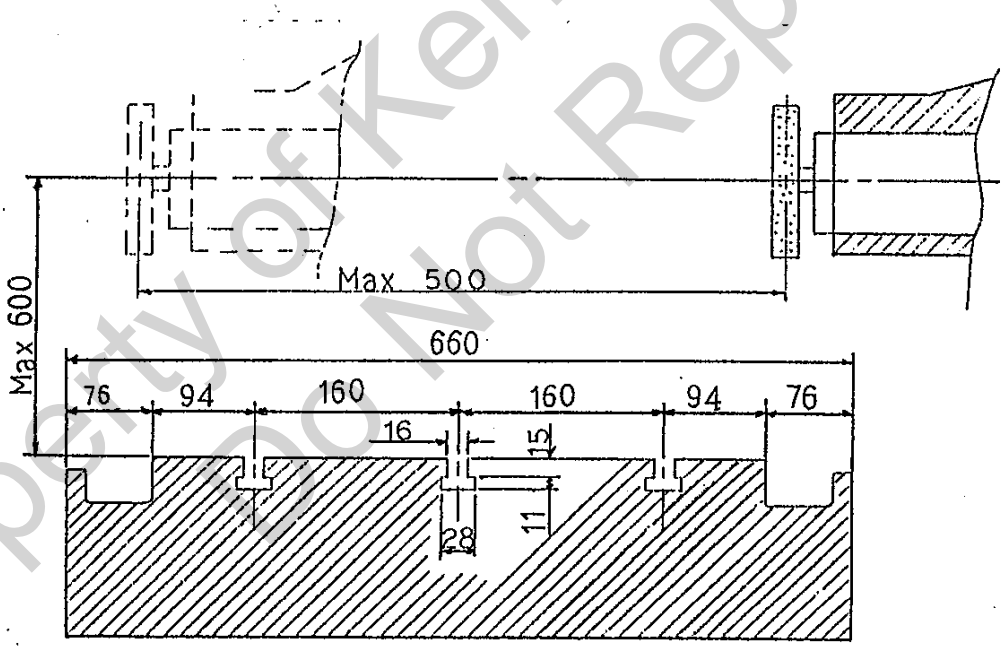

(6).Lubricant Instruction system&diagram

2040&2060 AH&AHD SERIES

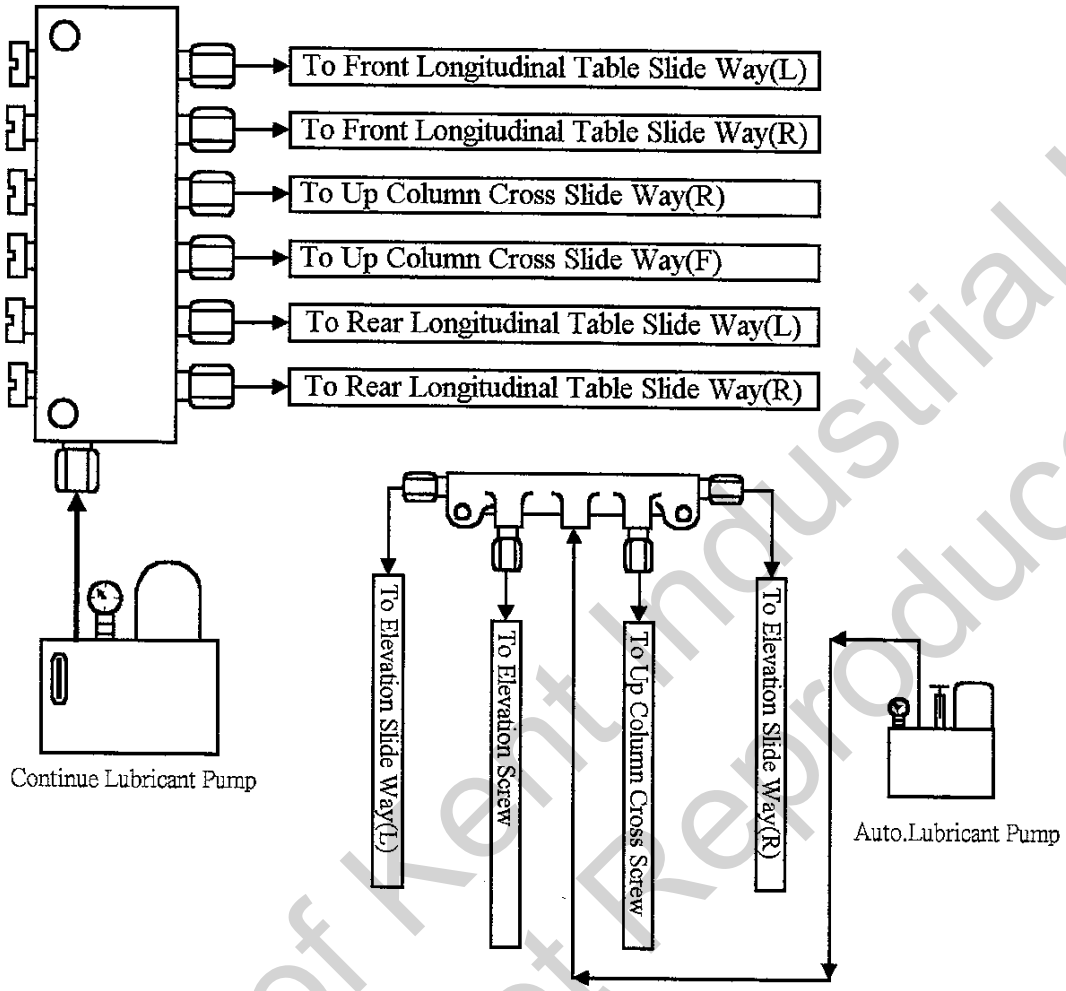

Reliability of the machine and economic running are ensured only by the correct choice of lubricant for the individual lubricating points.

(1). Lubricant Pump:

1-1.Continue Lubricant Pump Will be Cyclically operated ,when the hydraulic Pump is turned on , and the fluid of the Pump is about 500c.c every minute.

1-2.Auto Lubricant Pump will also be activated when the hydraulic Pump is turned on ; It is a internal one-shot type lubricant.it pumps 3-6 c.c once every ten minutes. (user can chose the lubricant quantity range one of 3,4,5,6 c.c and the factory default is the range of 6 c.c).

(2).Lubricant: SAE30,BP,ESSO,MOBIL or SHELL slide ways oil.

(3).Lubricant tank:

3-1.Continue Lubricant pump; 12L(12000 c.c)

3-2.Auto Lubricant pump; 1.5L(1500 c.c)

(4).Lubricant point: Please see the diagram above.

(5).Please check the oil quantity of Lubricant tank often , and always keep the tanks full of 80%.

2040/2060AHD CONTROL PANEL

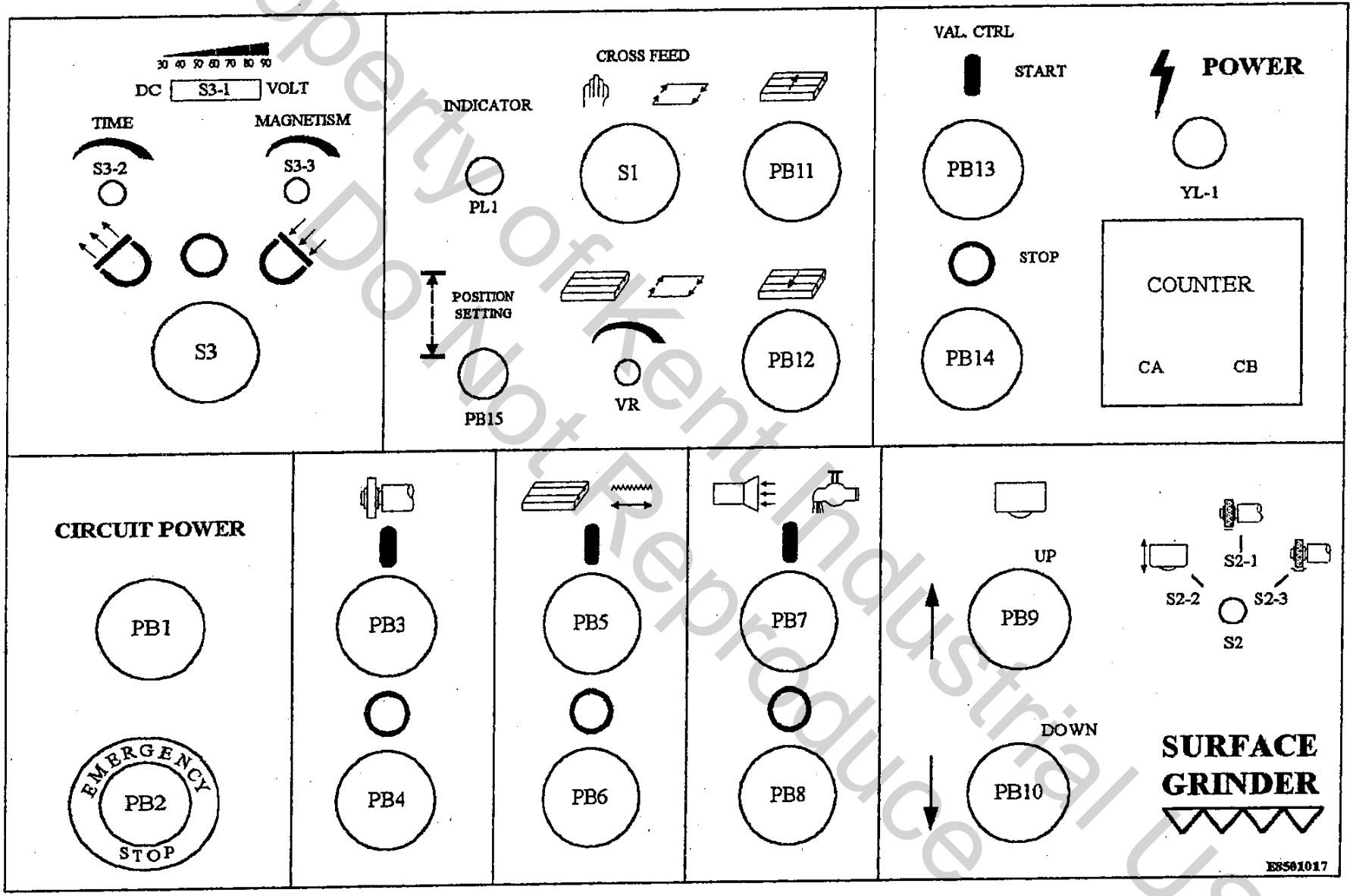

2040/2060AH CONTROL PANEL

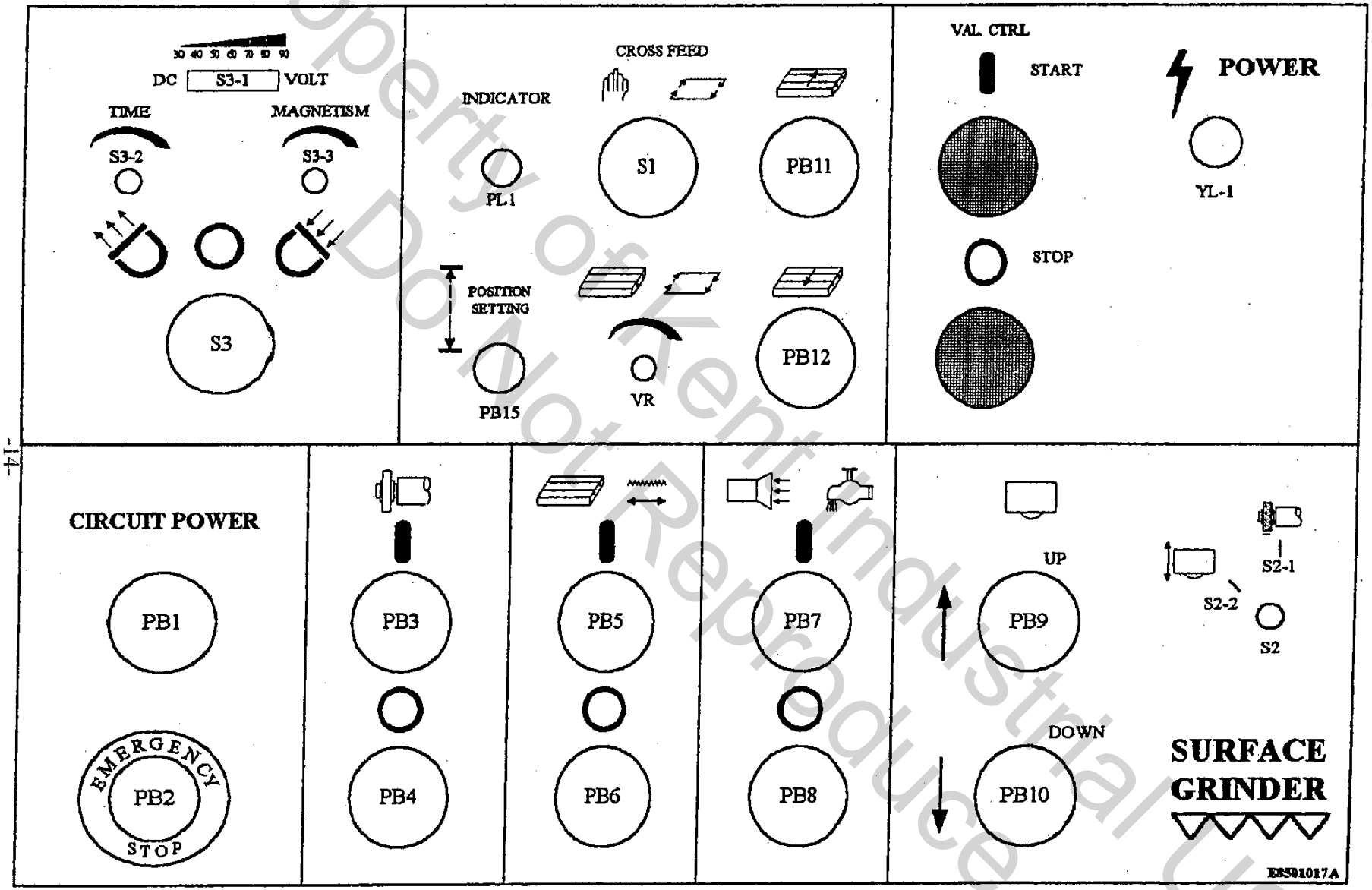

2040&2060 AHD CONTROL PANEL & ELECTRIC PARTS DESCRIPTION

YL1	INDICATE LAMP OF POWER SOURCE.
PB1	PUSH BUTTON "ON" OF CONTROL CIRCUIT SOURCE WITH INDICATE LAMP.
PB2	PUSH BUTTON "OFF" OF CONTROL CIRCUIT SOURCE.
PB3	PUSH BUTTON "ON" OF SPINDLE MOTOR WITH INDICATE LAMP.
PB4	PUSH BUTTON "OFF" OF SPINDLE MOTOR.
PB5	PUSH BUTTON "ON" OF HYDRAULIC PUMP WITH INDICATE LAMP.
PB6	PUSH BUTTON "OFF" OF HYDRAULIC PUMP.
PB7	PUSH BUTTON "ON" OF COOLANT OR DUST-SUCTION WITH INDICATE LAMP.
PB8	PUSH BUTTON "OFF" OF COOLANT OR DUST-SUCTION .
PB9	PUSH BUTTON FOR SPINDLE HEAD RAPID UPWARD. (ONLY S2 SWITCH CHOOSE ON MODE IS WORKABLE)
PB10	PUSH BUTTON FOR SPINDLE HEAD RAPID DOWNWARD.(ONLY S2 SWITCH CHOOSE ON MODE IS WORKABLE)
PB11	PUSH BUTTON FOR SPINDLE SEAT FORWARD.
PB12	PUSH BUTTON FOR SPINDLE SEAT BACKWARD.
PB13	PUSH BUTTON"ON" FOR AUTO DOWNFEED CIRCLE &HYDRAULIC VALVE& COUNTER.WITH INDICATE LAMP.
PB14	PUSH BUTTON"OFF" FOR AUTO DOWNFEED CIRCLE &HYDRAULIC VALVE& COUNTER.WITH INDICATE LAMP.
PB15	PUSH BUTTON"OFF" FOR AUTO CROSS-FEED STORKE SETTING.
PL1	INDICATOR OF AUTO CROSS-FEED STORKE SETTING CONDITION.
COUNTER	COUNTER.(CA:FEED TIMES SETTING. CB:SPARK OUT TIMES SETTING.)
S1	MULTI-SELECT SWITCH OF OPERATION MODE.
VR	VARIABLE SPEED OF AUTO CROSS-FEED.
S2	SELECT SWITCH OF RAPID UP&DOWN OR SURFACE GRIND OR PLUNGE MODE.
S2-1	SURFACE GRINDING MODE.
S2-2	SPINDLE HEAD RAPID UP&DOWN MODE.
S2-3	PLUNGE MODE.
S3	SELECT SWITCH FOR CHUCK MAGNETIC OR DEMAGNETIC CONTROL.
S3-1	INDICATE LED OF STRENGTH OF MAGNETISM.
S3-2	VARIABLE RESISTANCE FOR DEMAGNETIZE TIME ADJUSTING.
S3-3	VARIABLE RESISTANCE FOR STRENGTH OF MAGNETISM ADJUSTING.
MS0	MAGNETIC CONTACTOR OF CIRCUIT CONTROL SOURCE.
MS1	MAGNETIC CONTACTOR OF HYDRAULIC PUMP MOTOR.
MS2	MAGNETIC CONTACTOR OF SPINDLE MOTOR.
MS3 MS4	MAGNETIC CONTACTOR OF SPINDLE SEAT CROSS-FEED MOTOR.
MS5	MAGNETIC CONTACTOR OF COOLANT OR DUST-SUCTION MOTOR.
MS6 MS7	MAGNETIC CONTACTOR OF SPINDLE SEAT UP&DOWN MOTOR.
M1	HYDRAULIC PUMP MOTOR.
M2	SPINDLE MOTOR.
M3	SPINDLE SEAT FORWARD&BACKWARD CONTROL MOTOR.
M4	COOLANT&DUST-SUCTION MOTOR.
M5	SPINDLE SEAT UP&DOWN MOTOR.
LS1	APPROXIMATE SWITCH FOR AUTO CROSS-FEED TRIGGER SIGNAL.
PXS1 PXS2	APPROXIMATE SWITCH FOR SETTING STROKE OF AUTO CROSS-FEED.
LS4 LS5	LIMIT SWITCH FOR MAX. TRAVEL OF SPINDLE SEAT.
OL1,OL2 OL3,OL4 OL5,OL6	CURRENT OVERLOAD.
1PH tr.	1 PHASE TR.(FOR CONTROL CIRCUIT &EM.CHUCK POWER SUPPLY).
3PH tr.	3 PHASE TR.(FOR SPINDLE SEAT RAPID UP&DOWN AND CROSS-FEED,LUBRICANT PUMP,PAPER FILTER MOTOR).

2040&2060 AH CONTROL PANEL & ELECTRIC PARTS DESCRIPTION

YL1	INDICATE LAMP OF POWER SOURCE.
PB1	PUSH BUTTON "ON" OF CONTROL CIRCUIT SOURCE WITH INDICATE LAMP.
PB2	PUSH BUTTON "OFF" OF CONTROL CIRCUIT SOURCE.
PB3	PUSH BUTTON "ON" OF SPINDLE MOTOR WITH INDICATE LAMP.
PB4	PUSH BUTTON "OFF" OF SPINDLE MOTOR.
PB5	PUSH BUTTON "ON" OF HYDRAULIC PUMP WITH INDICATE LAMP.
PB6	PUSH BUTTON "OFF" OF HYDRAULIC PUMP.
PB7	PUSH BUTTON "ON" OF COOLANT OR DUST-SUCTION WITH INDICATE LAMP.
PB8	PUSH BUTTON "OFF" OF COOLANT OR DUST-SUCTION .
PB9	PUSH BUTTON FOR SPINDLE HEAD RAPID UPWARD. (ONLY S3 SWITCH CHOOSE ON MODE IS WORKABLE)
PB10	PUSH BUTTON FOR SPINDLE HEAD RAPID DOWNWARD.(ONLY S3 SWITCH CHOOSE ON MODE IS WORKABLE)
PB11	PUSH BUTTON FOR SPINDLE SEAT FORWARD.
PB12	PUSH BUTTON FOR SPINDLE SEAT BACKWARD.
PB15	PUSH BUTTON FOR SETTING POSITION OF AUTO CROSS-FEED CIRCLE.
PL1	AUTO CROSS-FEED STORK SETTING INDICATOR.
S1	MULTI-SELECT SWITCH OF OPERATION MODE.
VR	VARIABLE SPEED OF AUTO CROSS-FEED.
S2	SELECT SWITCH OF RAPID UP&DOWN OR SURFACE GRIND OR PLUNGE MODE.
S2-1	SURFACE GRINDING MODE.
S2-2	SPINDLE HEAD RAPID UP&DOWN MODE.
S2-3	PLUNGE MODE.
S3	SELECT SWITCH FOR CHUCK MAGNETIC OR DEMAGNETIC CONTROL.
S3-1	INDICATE LED OF STRENGTH OF MAGNETISM.
S3-2	VARIABLE RESISTANCE FOR DEMAGNETIZE TIME ADJUSTING.
S3-3	VARIABLE RESISTANCE FOR STRENGTH OF MAGNETISM ADJUSTING.
MS0	MAGNETIC CONTACTOR OF CIRCUIT CONTROL SOURCE.
MS1	MAGNETIC CONTACTOR OF HYDRAULIC PUMP MOTOR.
MS2	MAGNETIC CONTACTOR OF SPINDLE MOTOR.
MS3 MS4	MAGNETIC CONTACTOR OF SPINDLE SEAT CROSS-FEED MOTOR.
MS5	MAGNETIC CONTACTOR OF COOLANT OR DUST-SUCTION MOTOR.
MS6	MAGNETIC CONTACTOR OF LUBRICANT PUMP OF BASE SLIDE.
MS7 MS8	MAGNETIC CONTACTOR OF SPINDLE HEAD RAPID UP&DOWN .
M1	HYDRAULIC PUMP MOTOR.
M2	SPINDLE MOTOR.
M3	SPINDLE SEAT FORWARD&BACKWARD CONTROL MOTOR.
M4	SPINDLE HEAD RAPID UP&DOWN CONTROL MOTOR.
M5	COOLANT OR DUST-SUCTION MOTOR.
M6	LUBRICANT PUMP MOTOR OF BASE SLIDES .
LS1	APPROXIMATE SWITCH FOR AUTO CROSS-FEED TRIGGER SIGNAL .
PXS1 PXS2	APPROXIMATE SWITCH FOR SETTING STROKE OF AUTO CROSS-FEED.
LS4 LS5	LIMIT SWITCH FOR MAX.TRAVEL OF SPINDLE SEAT.
OL1,OL2 OL3,OL4 OL5,OL6	CURRENT OVERLOAD .
1PH tr.	1 PHASE TR.(FOR CONTROL CIRCUIT & EM.CHUCK POWER SUPPLY).
3PH tr.	3 PHASE TR.(FOR SPINDLE SEAT RAPID UP&DOWN AND CROSS-FEED, LUBRICANT PUMP,PAPER FILTER MOTOR).

OPERATE PROCEEDING FOR 2040 SERIES OF AUTO CROSS-FEED STROKING SYSTEM

1.AT FIRST,MAKE THE S2 SELECT SWITCH AT SURFACE GRINDING MODE(S2-1) , THEN CHOICE S1 SELECT SWITCH ON THE MANU OPERAT MODE( ). AFTER THAT,OPERATION THE PB11 OR PB12 PUSH BUTTON SWITCH (FOR RAPID FORWARD OR BACKWARD); TO SENT THE SPINDLE SEAT TO THE FISRT GRINDING EDGE OF WORKPIECE "A"(PLE. REFER FIG.1).

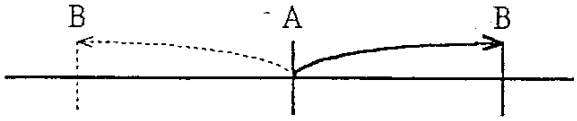

FIG.1

AFTER THE ABOVE PROCEDURES, PRESS PB15 PUSH BUTTON SWITCH (POSITION SETTING SWITCH WITH CONDITION INDICATOR PL1)ONCE, THEN INDICATOR OF PL1 WILL BE FLASHED CONTINUE WITH 1 SECOND FREQUENCE.
AND OPERATION PB11 OR PB12 SWITCH TO SENT THE SPINDLE SEAT TO THE SECOND EDGE OF WORKPIECE "B".
THEN ONE MORE PRESSING THE PB15 PUSH BUTTON,AND INDICATOR OF PL1 IS GOING TO STOP FLASHING AND KEEP LIGHTING ,TILL THE S1 SELECT SWITCH CHANGOVER TO AUTO MODE ( ).
WHEN THE INDICATOR OF PL1 TURN OFF ,THE PROCEDURE IS COMPLETED.

2.IF THE SETTING IS NOT CORRECT; FOR INSTANCE: SETTING "A"&"B" TWO POINTS ALMOST CLOSE TOGETHER,OR ONLY JUST SETTING ONE POINT " A" .AFTER THEN SWITCHING S1 SELECT SWITCH TO THE AUTO MODE( ).
THIS MOMENT THE INDICATOR OF PL1 WILL BE QUICKLY FLASHED WITH 0.1 SECOND FREQUENCY.IT MEANS THE SETTING IS MISTAKE. PLEASE RESETTING AGAIN.

3 THIS SYSTEM HAS AUTO MEMORY FUCTION;WHEN THE MACHINE IS OPERATION ,AND POWER IS FAILURE SUDDENLY OR THE EMERGENCY STOP SWITCH IS PUSNED TO INTERRUPT OPERATION .
UNLESS THE USER TURN THE CROSS-FEED LEADSCREW MANUALLY , BEFORE RESTARTING THE POWER SUPPLY.
OTHERWISE THE PREVIOUS SETTING WON'T BE CHANGED .

2040/2060AHD MAIN CIRCUIT DIAGRAM

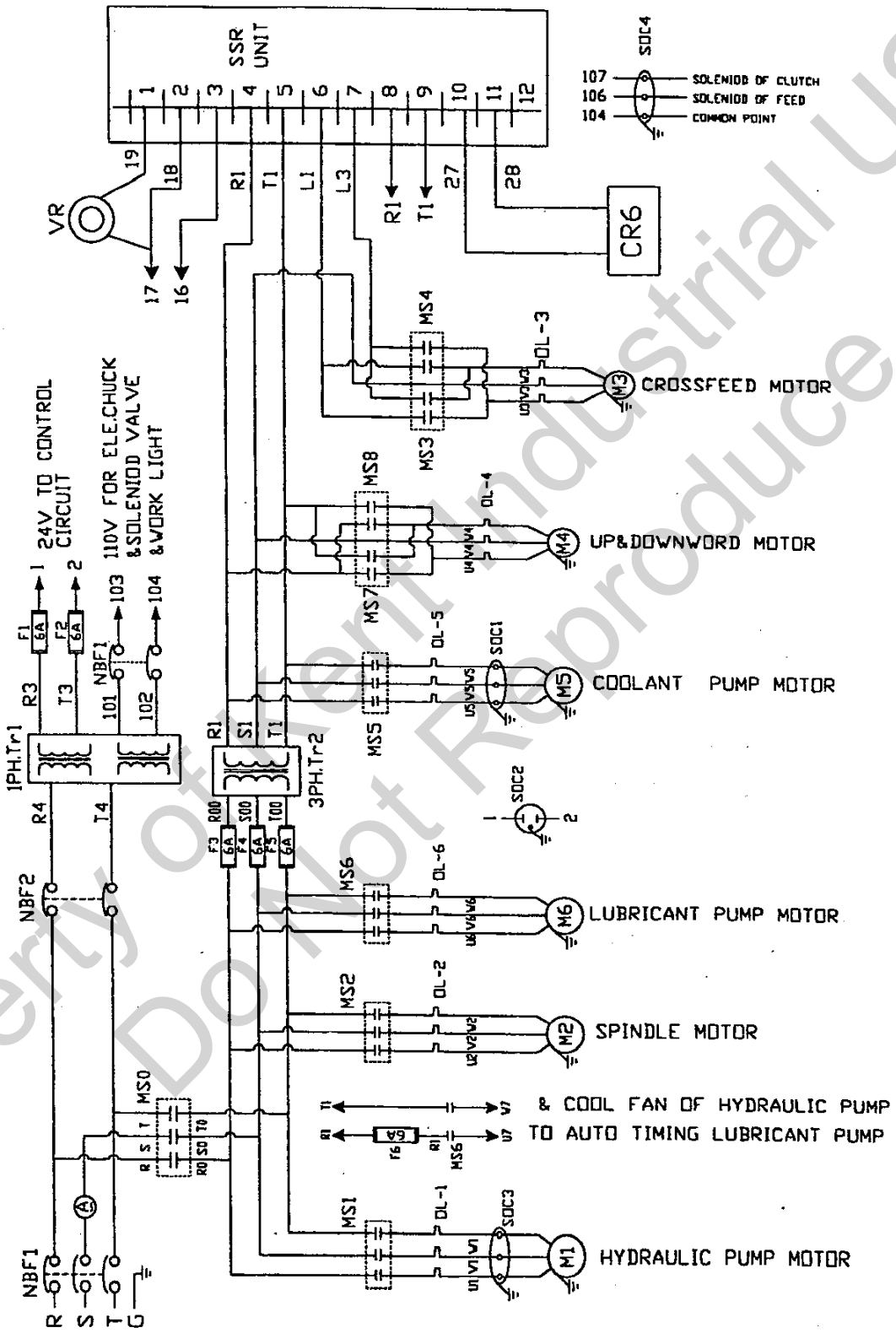

2040AHD GRINDER SERIES SHARP PLC CIRCUIT CONTROL DIAGRAM

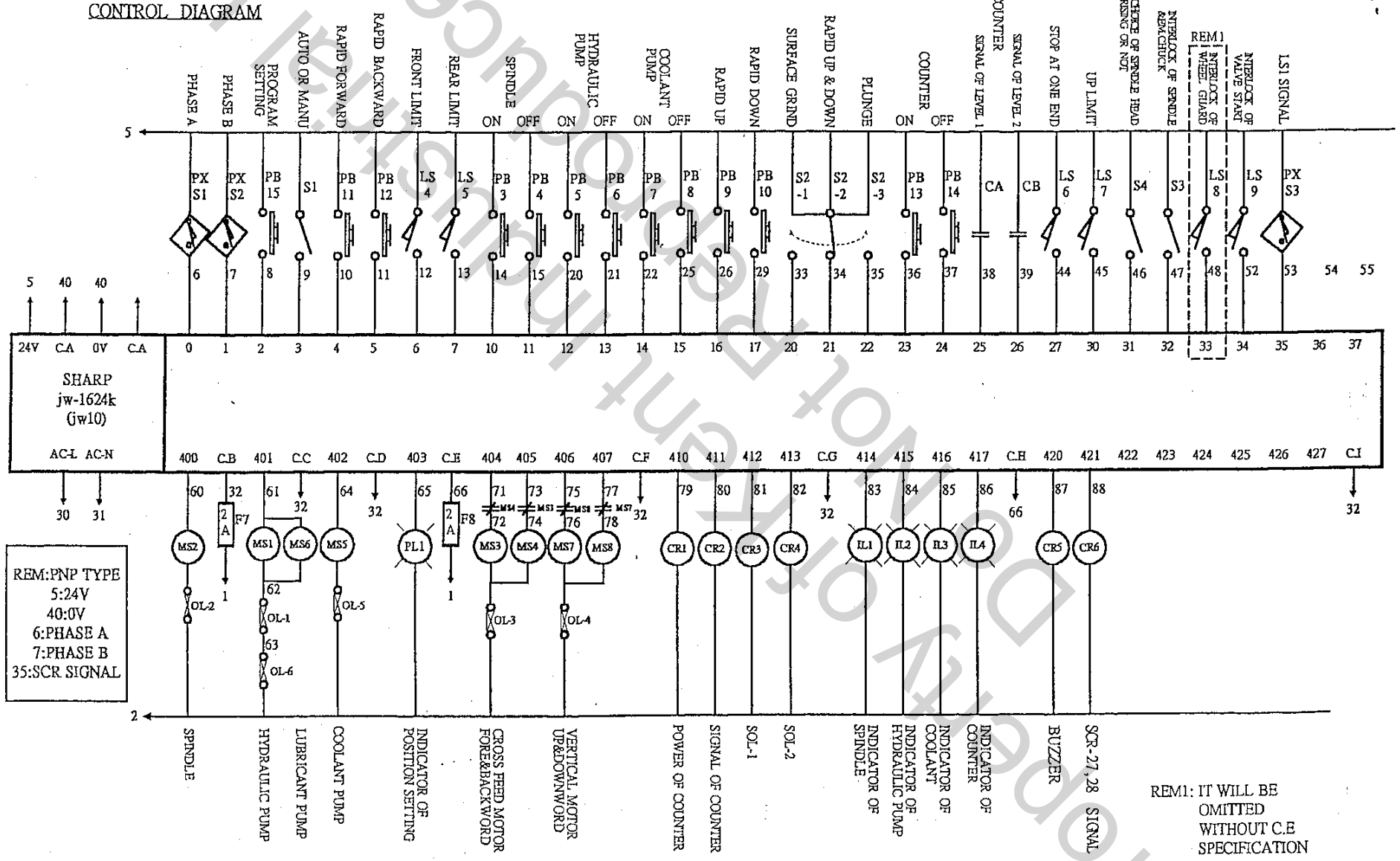

2040AH GRINDER SERIES
SHARP PLC CIRCUIT
CONTROL DIAGRAM

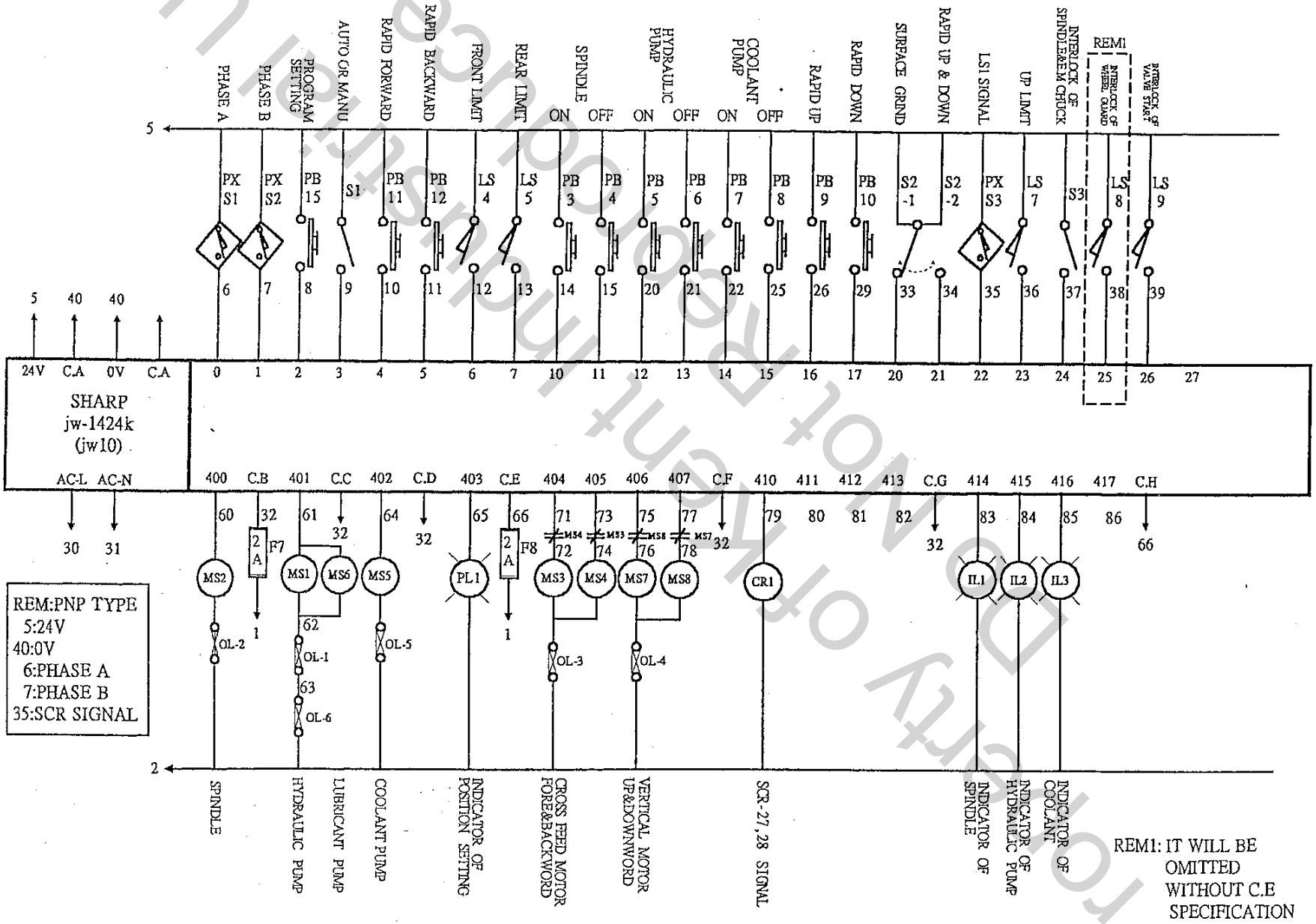

HD SERIES PLC TYPE

JT OF MAIN ELECTRICAL BOX

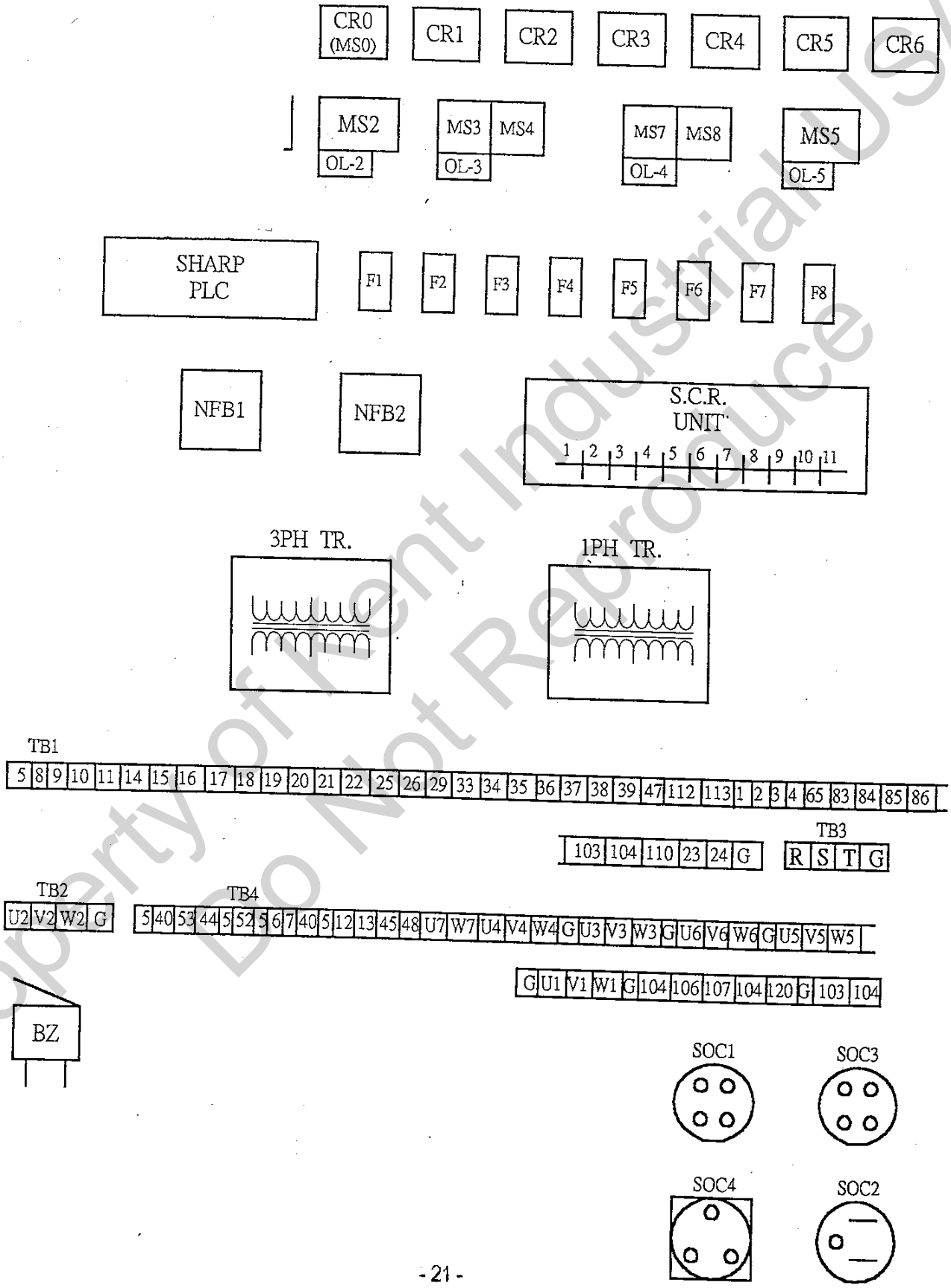

2040AH SERIES PLC TYPE

LAY OUT OF MAIN ELECTRICAL BOX

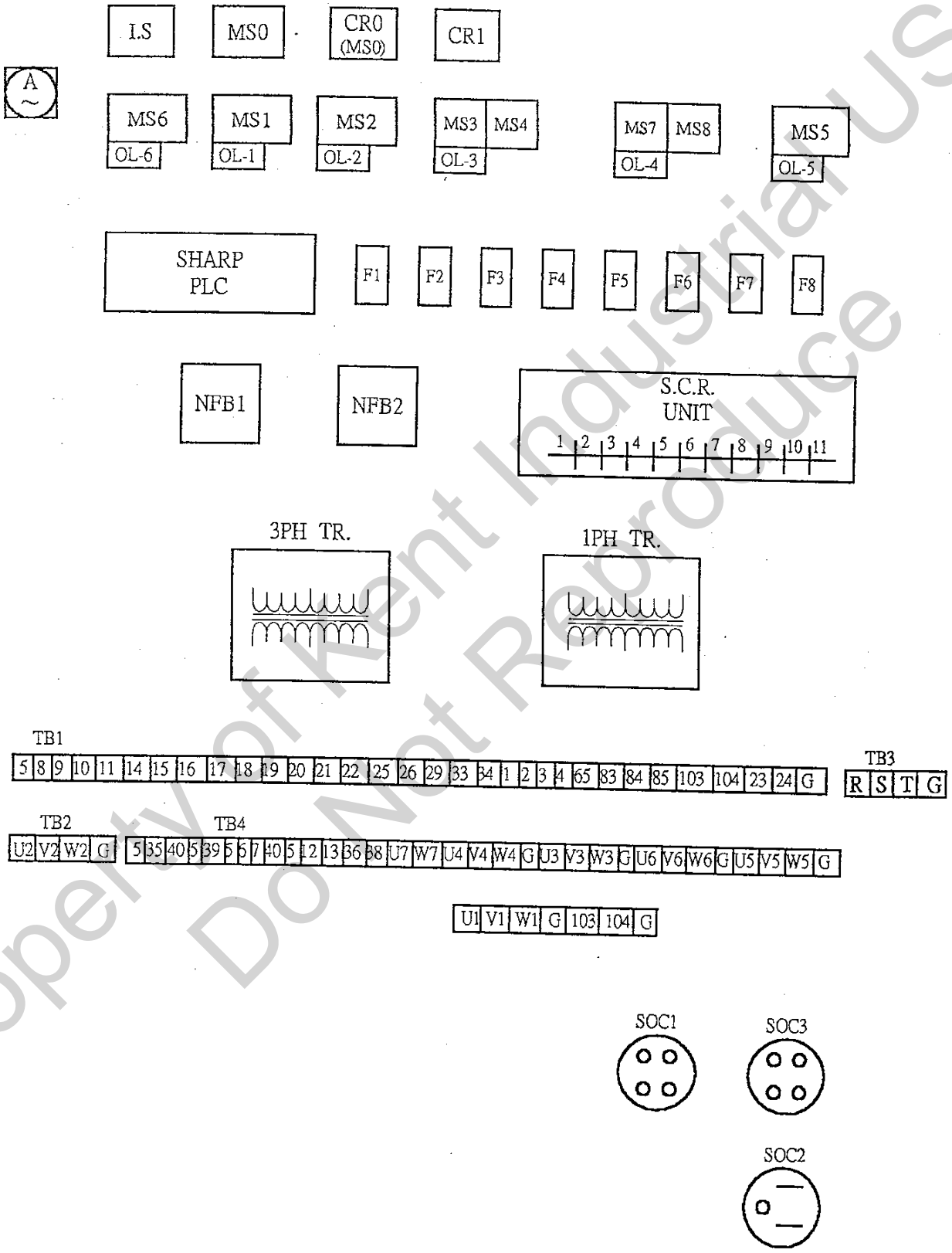

2040&2060 AH(AHD) CONTROL CIRCUIT

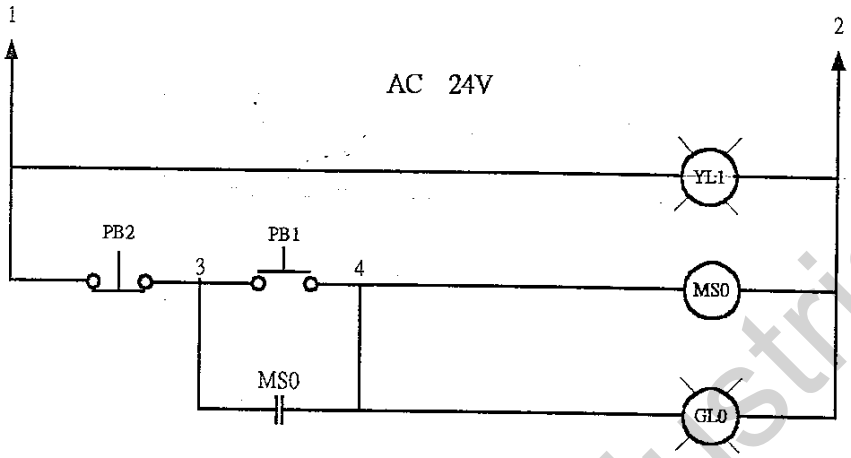

THIS SECTION ONLY FOR AHD SERIES

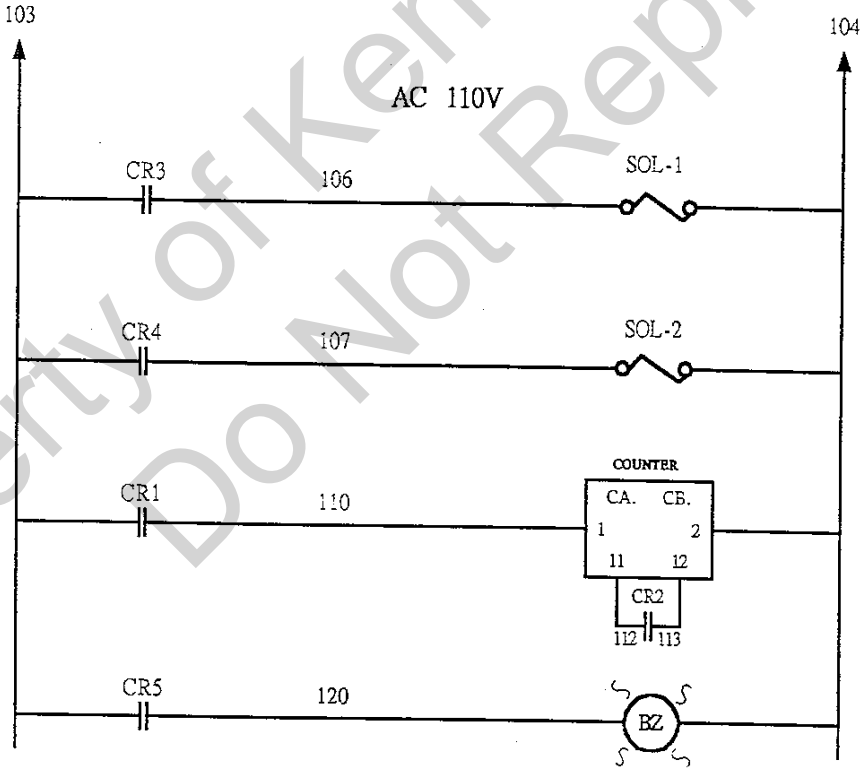

CONNECT OF 1PH. TRANSFORMER

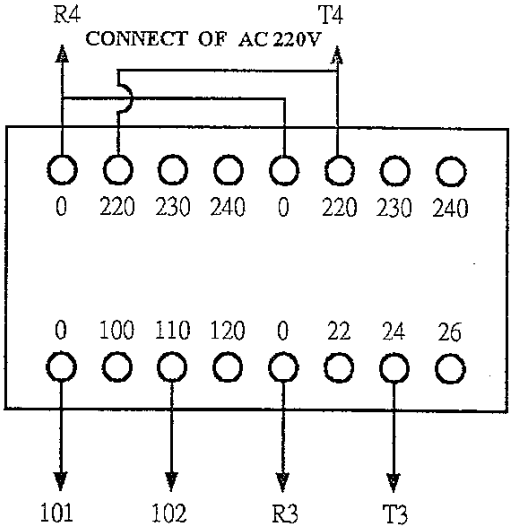

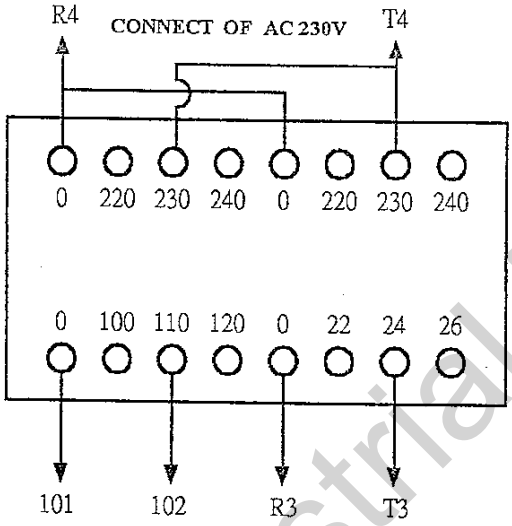

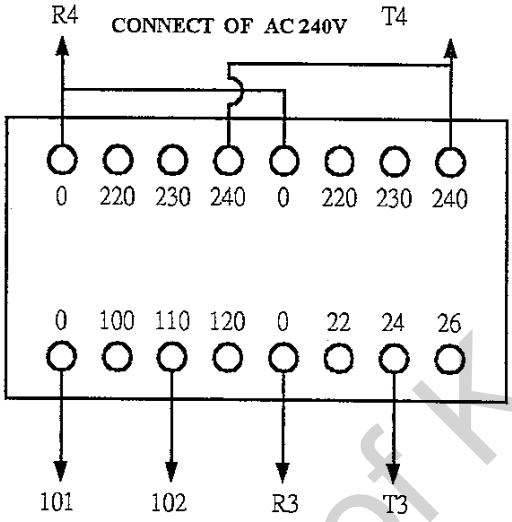

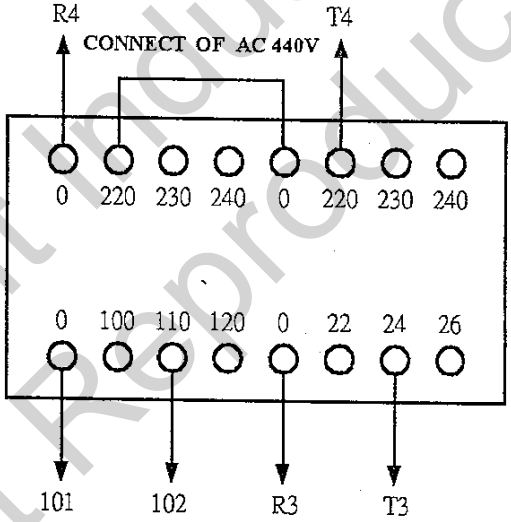

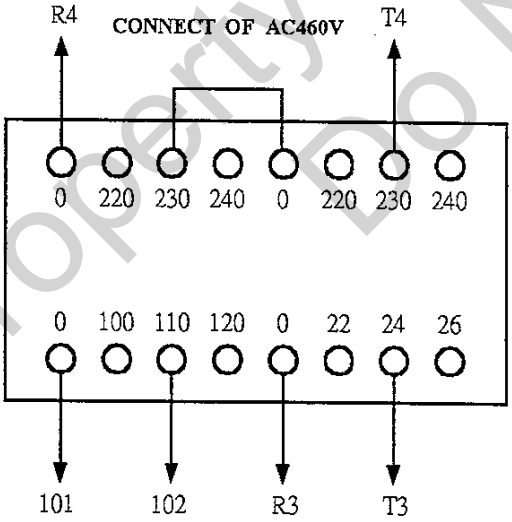

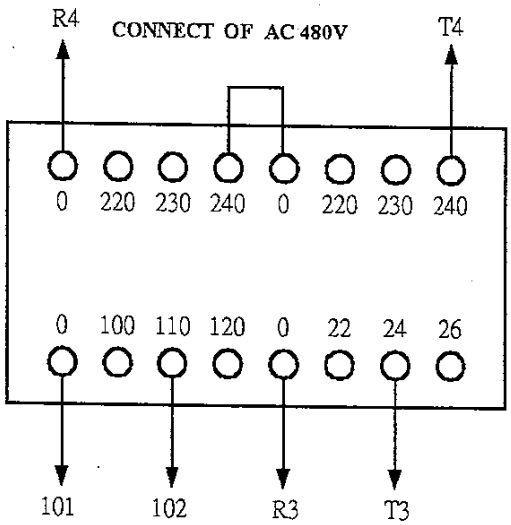

CONNECT OF 3PH. TRANSFORMER

CONNECT OF AC 220V

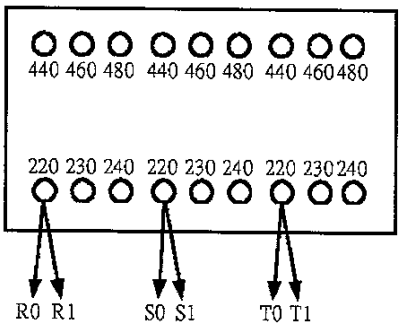

CONNECT OF AC 230V

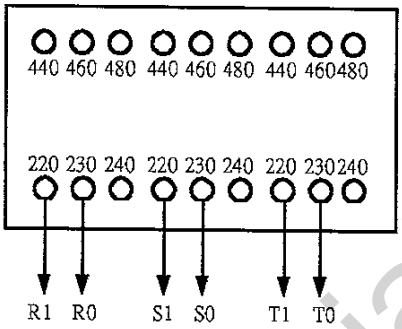

CONNECT OF AC 240V

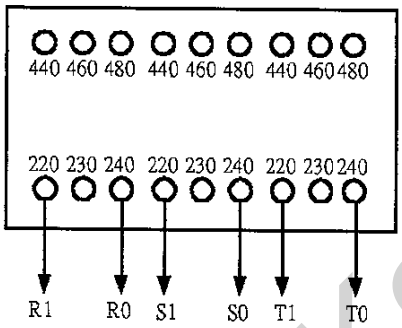

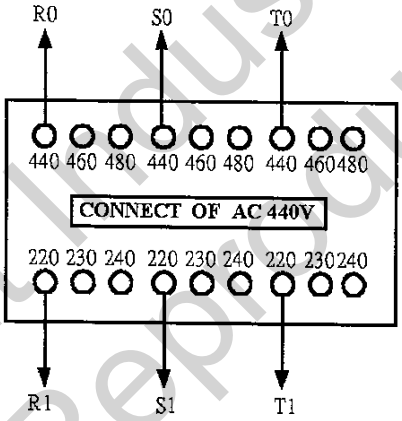

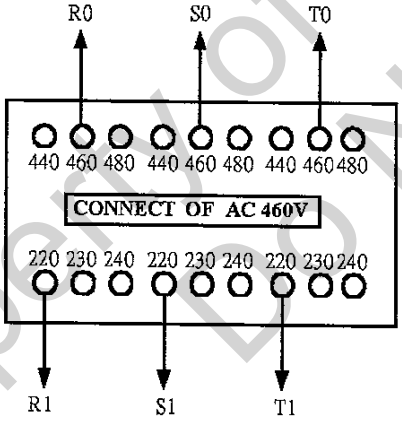

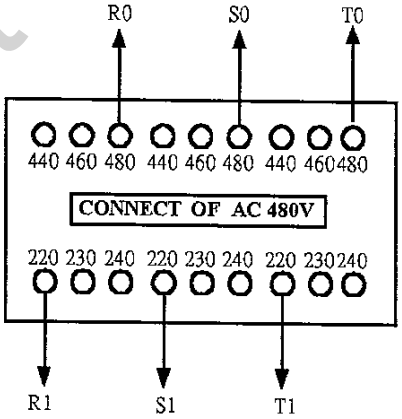

*** PLEASE PAY ATTENTION BEFOR OPERATION THE VALVE FLUID CONTROL BAR**

此機器油壓控制系統,設有安全裝置,當油壓馬達要啓動時,須將流量控制把手,切在關"OFF"的位置,方能啓動油壓馬達.

* For safety reason , the switch of hydraulic pump is inter- locked with fluid control bar.
So before starting the hydraulic pump every time, please make sure that the fluid control bar,have already turned to the "off" position.

*** ONLY FOR AHD TYPE.**

(8). Hydraulic System

a. 2040 / 2060 AH

2040,2060AH HYDRAULIC DIAGRAM

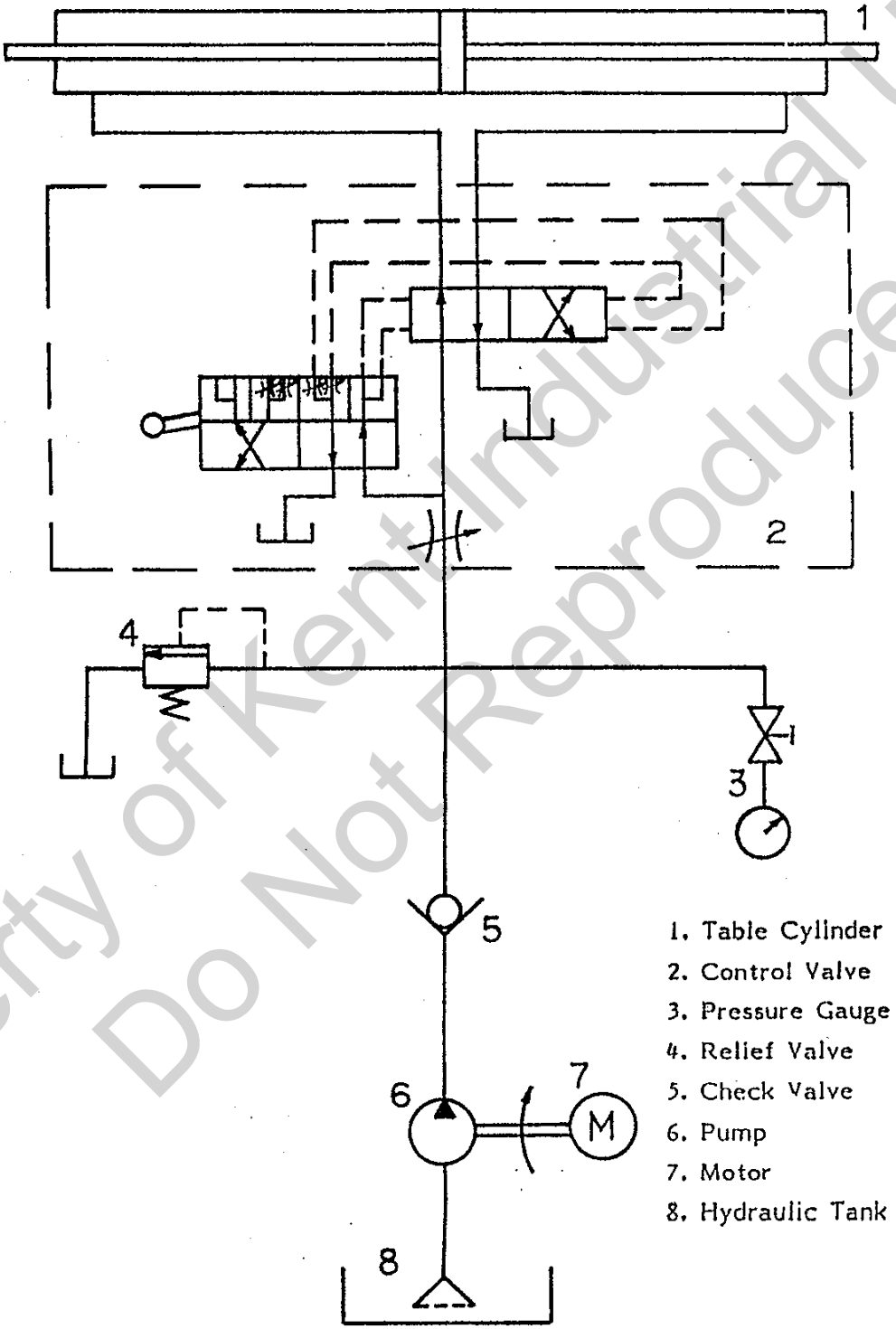

b. 2040 / 2060 AHD

2040,2060AHD HYDRAULIC DIAGRAM

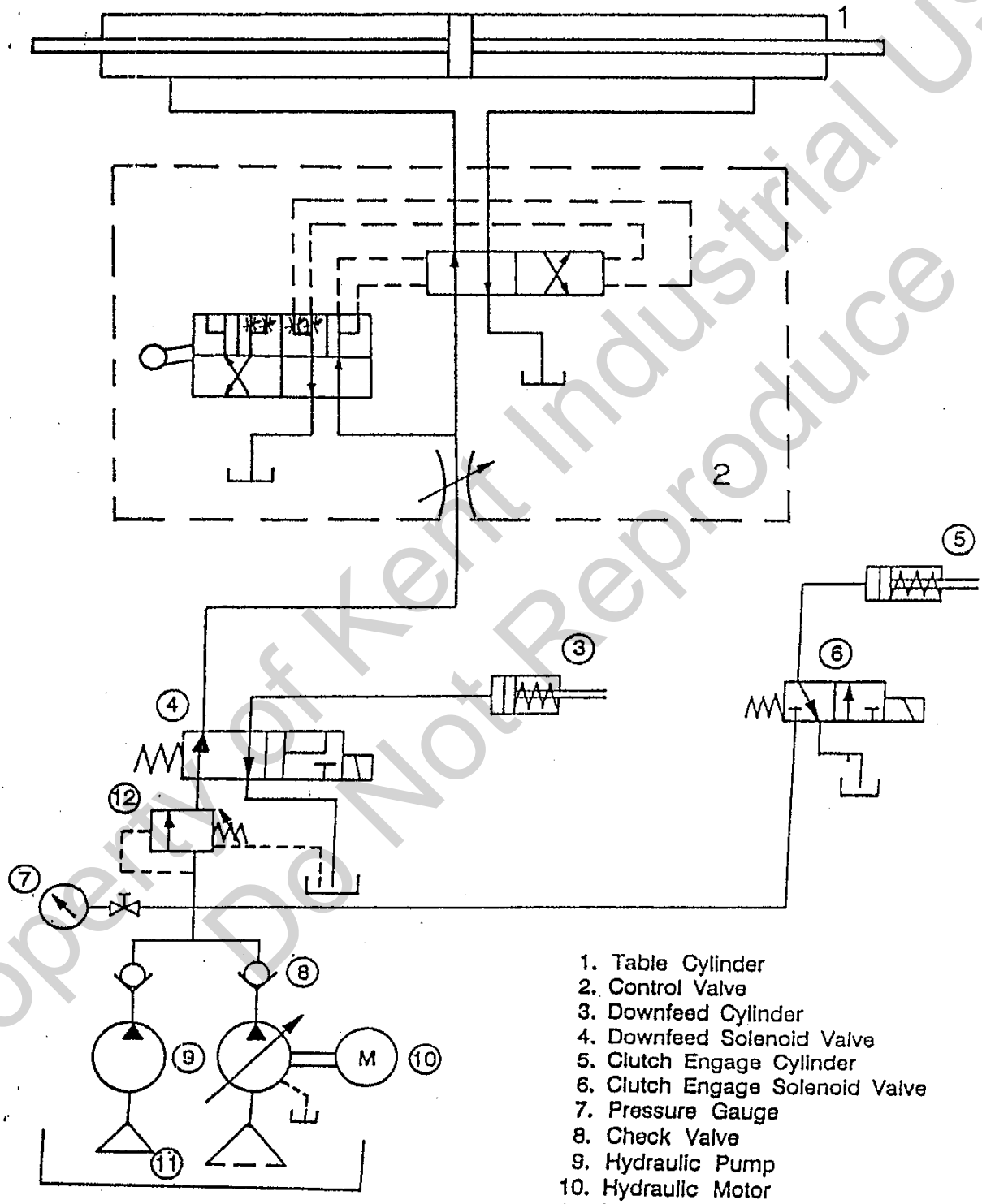

1. Table Cylinder
2. Control Valve
3. Downfeed Cylinder
4. Downfeed Solenoid Valve
5. Clutch Engage Cylinder
6. Clutch Engage Solenoid Valve
7. Pressure Gauge
8. Check Valve
9. Hydraulic Pump
10. Hydraulic Motor
11. Hydraulic Tank
12. Sequence Valve

g. Hydraulic Oil

Hydraulic tank volume:

2040AH,2040AHD
2060AH,2060AHD About 210~220 liters

Re-fill frequency: After first one month change new hydraulic oil and clean hydrau tank, then every six months

Hydraulic oil:

CPC	BP	ESSO	MOBIL	SHELL
R-68	ENGRGOL	ESSTIC 50	P.T.E. Oil	SHELL
	HL100		Medium	Tellus Oil 29
	4.5°E/50°C	4.7°E/50°C	3.93°E/50°C	4.0°E/50°C
	33cst/50°C	35cst/50°C	28.9cst/50°C	29cst/50°C

* Fill up the hydraulic oil before starting.
* Table driven by hydraulic force, please ensure that there is no people or matter within the range of table movement before starting the longitudinal travel.
* Maximum hydraulic pressure: 30 kgs/cm²
* Clean filter or change a new one if damaged when changing new oil.

2040,2060AH LIMIT SWITCH POSITION

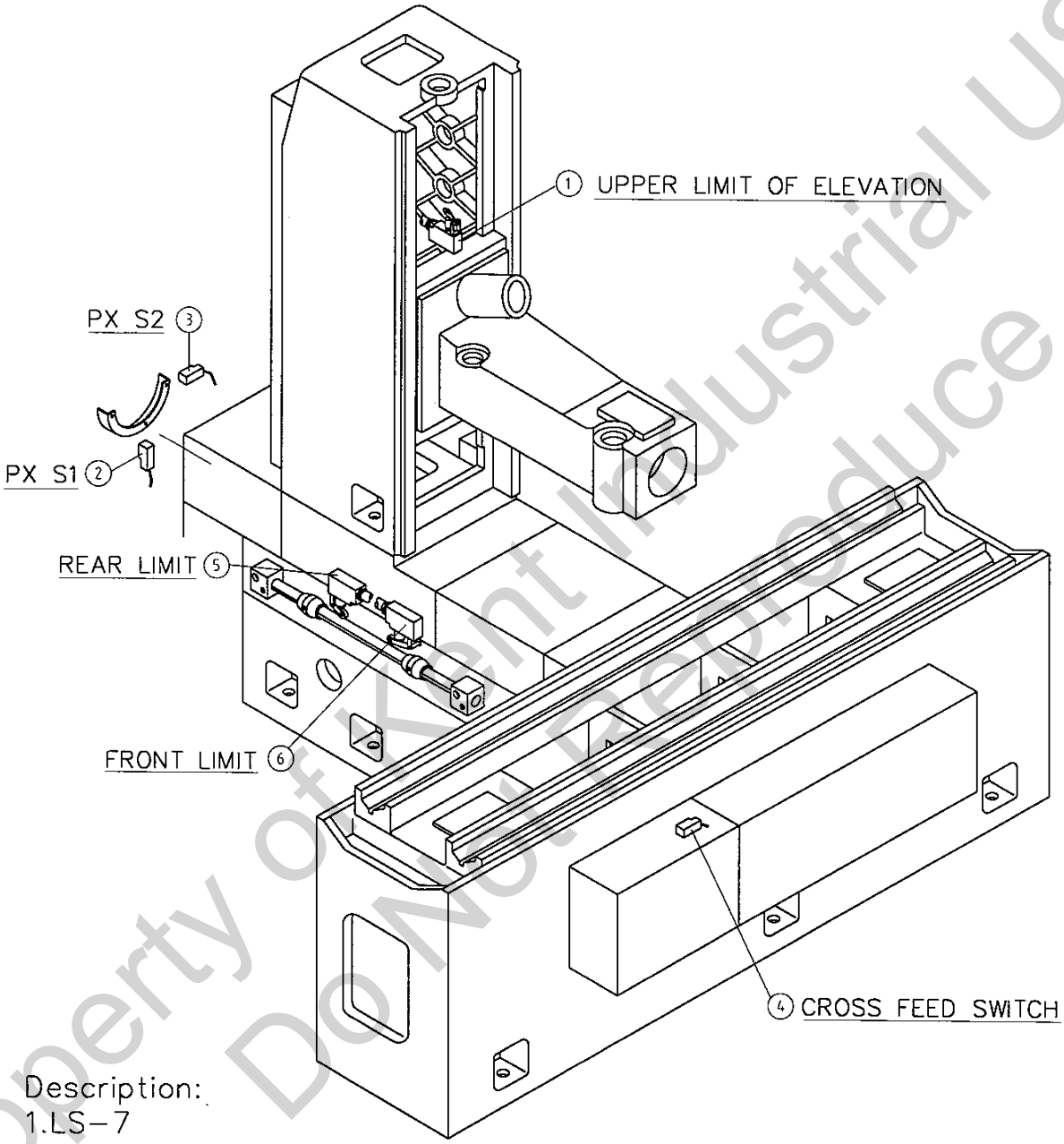

Description:
1.LS-7
2.PXS1
3.PXS2
4.PXS3
5.LS-4
6.LS-5

* For Above Code No.,Please Refer To Circuit Diagram

2040 & 2060 AH(AHD) LIMIT SWITCH POSITION

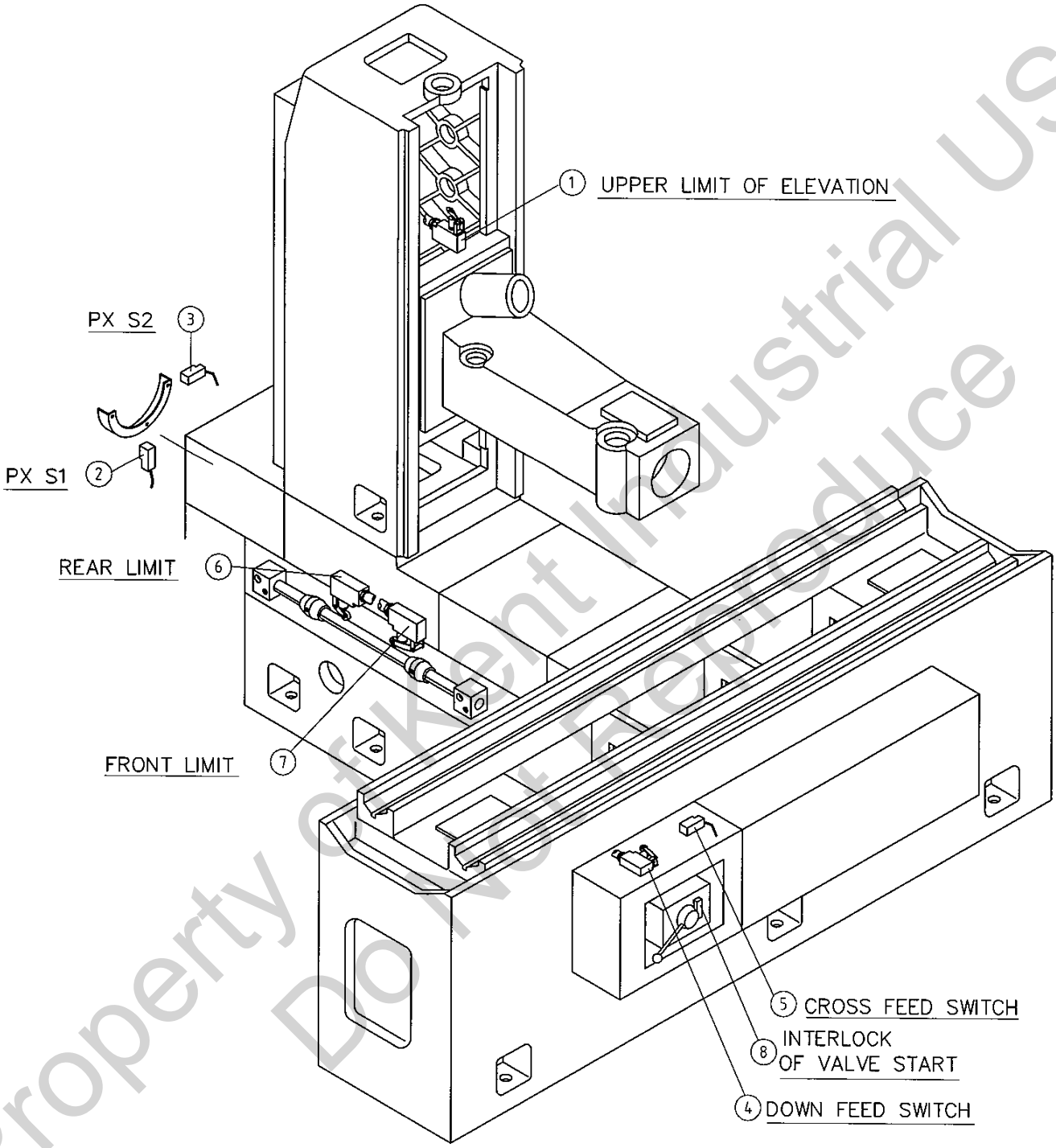

Description:

1.LS−7	5.PXS3
2.PXS1	6.LS−4
3.PXS2	7.LS−5
4.LS−6(AHD SERIES)	8.LS−9

*For Above Code No., Please Refer To Circuit Diagram

(10). Balancing the grinding wheel

Efficient balancing is essential to eliminate unnecessary and additional stress in the wheel. It is also unavoidable to obtain high quality results. Grinding accuracy and surface finish as well as life of grinding wheel, wheel spindle and bearings depend to some considerable extent on careful balancing. Static balancing will frequently sufficed for this purpose.

The grinding wheel together with the wheel flange is fitted to balancing arbor and this assembly is then placed on two accurate parallel knife edges of the wheel balancing base, and balancing can be effected as follows: (see Fig. 2)

* The wheel balancing base must be levelled (Fig. 1)
* Allow the wheel to oscillate to find the center of gravity which is then marked "S" with chalk (Fig. 3)
* Apply the first balancing weight "G" opposite to this point "S" and screw it up. It can not be moved again (Fig. 4)
* Place two correction weight "K" anywhere around the periphery, but at equal distance "a" from weight "G" (Fig. 5)
* Turn the wheel through 90° at a time and see if it is balance. If not, the correction weight "K" must be moved until the wheel is in balance in any position (Fig. 6)
* After balancing, the wheel must be given a test run of at least five minutes at full working speed before being used or starting re-balance.

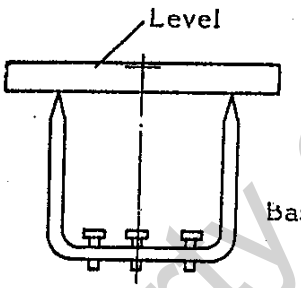

Fig. 1

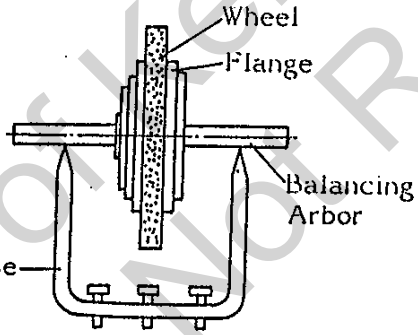

Fig. 2

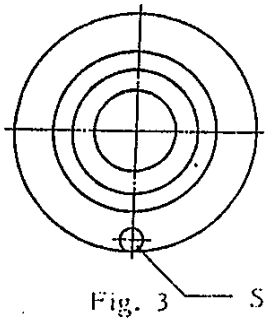

Fig. 3

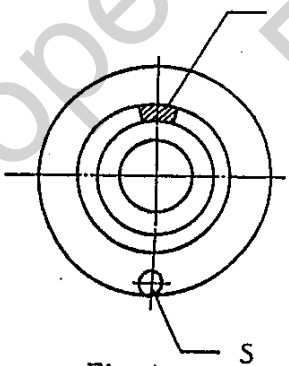

Fig. 4

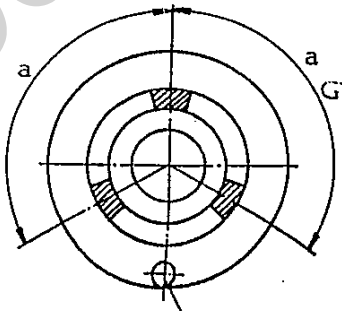

Fig. 5

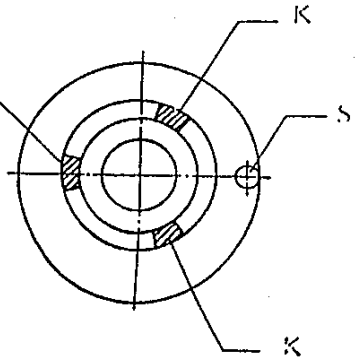

Fig. 6

E. GENERAL COMMENTS OF GRINDING

The grinding results obtained depend to a very degree on the choice of the correct grinding wheel and suitable operation.

(1) Stock removal efficiency

For intensive stock removal a coarse grain (about 30-36) should be used. The wheel is dressed by passing the diamond over quickly so that the surface of the wheel is roughened and bites well.

(2) Surface finish required

If fine finish is to be produced, a finer grain wheel is required (40-80). The diamond in this case is passed slowlyover the wheel so as to break up the grain.

(3) Distortion of the workpiece

If the workpiece shows too much distorrion when being ground, this means that the stock removal was too great and the longitudinal and cross movements of the table was too slow, or the grinding wheel in " clogged ".

(4) Undersirable burns and grinding cracks

If burn marks and grinding cracks appear, this means that the wheel is too hard, or the wheel " clogged "

F. WHEEL INSPECTION

It is absolutely essential to comply fully with following safety rules. These are intended to protect the operator against danger.

Wheel inspection and fitting:

Prior to fitting any grinding wheel, it should always be tested. Sounding the wheel is a generally accepted test method.

The wheel should be suspended from a mandrel secured to its bore and should then be " htly sounded with a wooden hammer. Even wheels with hair cracks not visible with the bare eye will produce a distorted note in comparison with perfect wheel where the sound is clear. Defective grinding wheel must not be used.

There are two pieces of paper washer on both faces of wheel and serve as plastic packings between wheel and mounting flange. The packing washer must not be removed, when mounting the wheel should slide onto the flange easily by hand without the need for force. Wheel flange must be absolutely clean especially on the clamping and location surface, in the spindle bore and thread. The flange fixing screws should be tightened gradually and diagonally. The wrench should be applied at least 4 to 6 times to each screw in turn. When the wheel has run under coolant for sometime the paper packing washers will be damped, so it must re-tighten the fixing screws again diagonally.

After being balanced for the first time, the wheel must be mounted on the grinding spindle of the machine and dressed. This can be done with the parallel dresser on the spindle carrier or with one fitted on the table. When dressing the wheel from the table, the table must be locked longitudinally and then cross-traversed with handwheel. The wheel must be dressed until it runs dead true. The grinding finish is improved, if any out-of-truth in the side walls of the wheel is also removed.

After this first balancing, the wheel must be removed from the spindle again and then carefully re-balanced. After being fitted to the spindle again and re-dressed, it is ready for use.

* The wheel attached with the machine are accurately balanced together with their mountings. As wear can lead to unbalance, the wheel should be re-checked and, if necessary, re-balanced.

Grinding wheel absorbs humidity and coolant, it is therefore advisable not to start coolant supply when the wheel is stationary, otherwise the wheel will absorb liquid on one side only and will then be out of balance. If the wheel is allowed to stand for any length of time coolant will collect at the lowest point. Unbalance will also be generated if the wheel is not allowed to idle after operation. Idling is essential to throw-off coolant by centrifugal force.

Prior to place the flange-mounted grinding wheel to the spindle, flange bore and spindle taper must be absolutely clean, and the wheel is pushed by hand onto the spindle taper.

Subsequently, tighten wheel flange securely with fixed bolt. (Fig. 7). To release wheel flange from spindle taper with extractor. (Fig. 8).

Fig. 7

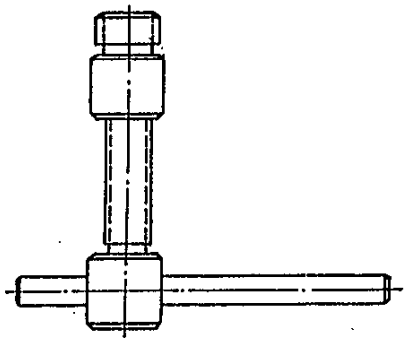

Fig. 8

* If various materials have to be ground, so that the wheel has to be changed frequently it is more advantageous to change the wheel complete with flange. It would involve unnecessary loss of time and wheel waste to remove the wheel from its mounting every time and re-balance and re-dress it.

G. DRESSING THE WHEEL AND CORRECT TREATMENT OF DRESSING DIAMOND

The diamond is inserts in the dressing device. The sleeve of the dressing device is arranged at an angle fo about 5°, so that , when the diamond loses its keenness, it can be turned in the sleeve, along with its holder, thus ensuring that there is always a sharp diamond edge available.

Various degrees of roughness can be produced in the ground component by varying the speed at which the diamond is passed over the grinding wheel.

If there is only about 0.2mm to 0.3mm stock removal, it is advisable to roughen the grinding wheel. This is done by feeding the diamond in about 0.03mm and turning the handwheel rapidly, so that the dressing diamond moves quickly over the wheel. This makes the wheel bite well and the stock removal is good.

If the component is to be finish ground to size with the same grinding wheel, the wheel must be dressed again, this time slowly, in two or three passes, with the diamond fed in only about 0.01mm.

Frequent light dressing is better for the life of the grinding wheel and the diamond than a heavy cut.

When dressing, the diamond should always be cooled, if possible, but sudden cooling is dangerous, as it can lead to the diamond being split.

As the diamond is very brittle because of its extraordinary hardness and being sensitive to even the slightest knock, naturally cracks easily.

When dressing, begin in the center, as the edges are uaually worn down further. If dressing is begun at the worn edges, there is danger of the higher pressure in the center overstressing the daimond and shattering it.

Experience has shown that, with highly accurate grinding, dressing with the hand-operated dressing device on the spindle carrier is inadequate. The hand operation necessarily causes slight undulations in the surface of the wheel.

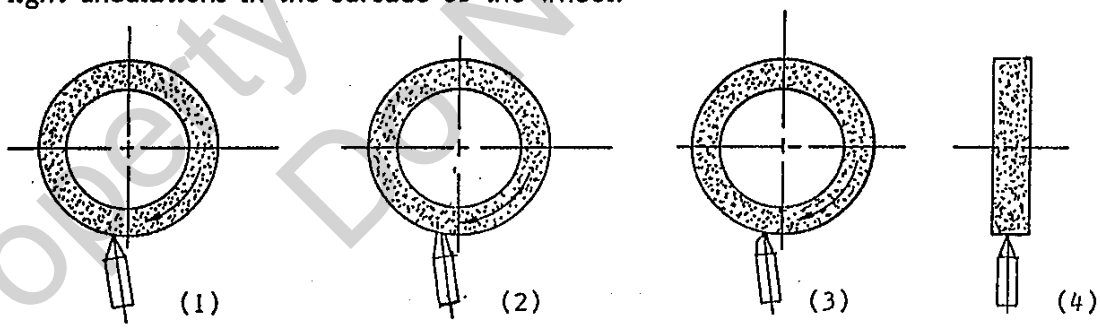

(1) The new diamond is inclined at the correct angle to the wheel.

(2) As a face has formed on the diamond, it must be turned about its axis.

(3) The new point acts like a new diamond again.

(4) Begin in the middle of the width.

After a certain time, the diamond must be changed in its holder, i.e. it must be reset to ensure economical operation. This re-setting should be undertaken in time, before any of the holder itself has been ground off. Otherwise, there is first of all the danger of breaking the diamond out and losing it, or secondly, of its being too small to be reset.
This is really false economy.

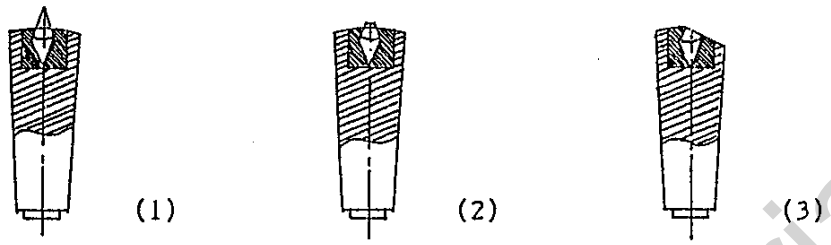

(1) The new diamond.
(2) The diamond now be reset.
(3) Too late. The diamond can no longer be reset, as it has no more holder. Resetting should be done by specialists only.

H. STORAGE OF GRINDING WHEELS

The wheels should be kept in special racks in a dry place and must be protected from knocks and jolts, especially when they are being transported.
As a rule, they should be stood on edge, but thin wheels and wheels with a sharp edge must be laid flat on an even surface.
Grinding wheels must not be allowed to come into contact with oil or grease. An oilsoaked wheel loses its bite and its application is very limited.

I. SELECTION OF SUITABLE GRINDING WHEELS

Grinding wheel markings: For instance WA 46K8V
WA: Kind of abrasive
.6: Grain size
K: Grade
8: Structure
V: Bond type
A. Kinds of abrasive
A: For common steel grinding
WA: For higher hardness material grinding, such as heat-treated steel, alloy steel, etc.
H: Suitable for higher hardness material, particularly high speed steel
C: For cast iron and non-ferrous grinding
GC: For super hard grinding such as tungsten carbide steel
B. Grain size
Coarse: 10,12,14,16,20,24
Medium: 30,36,46,54,60
Fine: 70,80,90,100,120,150,180

Grain / Grinding condition	Coarse	Fine
Stock removal	much	little
Surface roughness	coarse	fine
works hardness	soft	hard
Surface contacted	wide	narrow
Dia. of the wheel	big	small

C. Grade: It indicate the strength of the bond which hold abrasive

Soft: A to H

Medium: I to P

Hard: Q to Z

Grade / Grinding condition	Soft	Hard
Works hardness	hard	soft
Surface be contacted	wide	narrow
Movement of work	slow	quick
Wheel speed	quick	slow

D. Structure: The structure number of a wheel refers to the relative spacing of the grains of abrasive; the larger number, the wider the grain spacing.

Close: 0,1,2,3,4,5,

Medium: 6,7,8,9,

Wide: 10,11,12,

Sturcture / Grinding condition	Wide	Close
Surface roughness	coarse	fine
Surface be contacted	wide	narrow
Works hardness	soft	hard

E. Bond:

V: Vitrified,

S: Silicate,

B: Resinoid,

R: Rubber,

E: Shellac

J. WHEEL SELECTION TABLE

Material \ Wheel Specification \ Wheel Diameter		150mm–205mm	205mm–355mm	355–510mm
STEEL	< HRC 25	WA A 46K	WA A 46J	WA A 36J
	< HRC 25	WA 46J	WA 46I	WA 36I
ALLOY STEEL	< HRC 55	WA 46J	WA 46I	WA 36I
	< HRC 55	WA 46I	WA 46H	WA 36H
TOOL STEEL	< HRC 60	WA 46I	WA 46H	WA 36H
	< HRC 60	WA 46H	WA 46G	WA 36G
STAINLESS STEEL	Series 400	WA 64I	WA 46H	WA 36H
	Series 300	WA 36J	WA 30J	WA 36I
CAST IRON	Ordinary	C 46J	C 46I	C 36I
	Special	GC 46I	GC 46H	GC 36H

K. REFERENCE FOR GRINDING CONDITION

(1). Downfeed

Material / Finish	Cast Iron, Soft/harden steel	Stainless and heat resistant steel	Tool steel	Cross Feed
Rough	0.0006–0.0012" 0.0015–0.03mm	0.0008–0.0012" 0.02–0.03mm	0.0008–0.0016" 0.02–0.04mm	under 1/2 of wheel thickness
Fine	0.0002–0.0004" 0.005–0.01mm		0.0002–0.0006" 0.005–0.015mm	under 1/4 of wheel thickness

(2). Cross feed

Cross feed	Great	Small
Grinding resistance	great	small
Heat produced	much	less
Surface finish	rough	fine
Wheel worn out	much	little

(3). Table longitudinal traverse

Table traverse	Quick	Slow
Grinding resistance	great.	small
Heat produced	less	much
Surface finish	rough	fine
Wheel worn out	much	little

Suitable speeds of the table traverse

Work material	Soft steel	Heat treated steel	Tool steel	Cast iron
Speed: M/Min.	6-15	20-25	6-25	16-20

(4). Suitable peripheral speeds of wheel : 1200-1800M/Min.

Wheel speed / Condition	Quick	Slow
Grinding resistance	small	great
Heat produced	much	less
Surface finish	fine	rough
Wheel worn out	small	great
Safety	bad	better

Material	Peripheral speed
Steel	20-30M/Min.
Cast iron	18-20M/Min.
Tungsten Carbide	8-18M/Min.
Zinc alloy and light metal	25-30M/Min.

L. USE OF THE OPTIONAL ATTACHMENT

(a). Parallel Dressing attachment (Standard Accessory)

The wheel can be dressed either by diamond tool on the chuck or on the parallel dressing attachment which mounted on spindle carrier. The diamond tool is arranged at an angle to the center line of the wheel as shown on Fig. , so that when the diamond loses its keenness it can be turned an angle, ensuring that there is always a sharp diamond edge available. The dressing method and points are same as "Dressing the wheel". Experience has shown that, with highly accurate grinding, dressing with the diamond which mounted on the magnetic chuck is better than which on the spindle carrier (the former is more stable than latter) as the latter condition will cause slight undulation in the surface of the wheel.

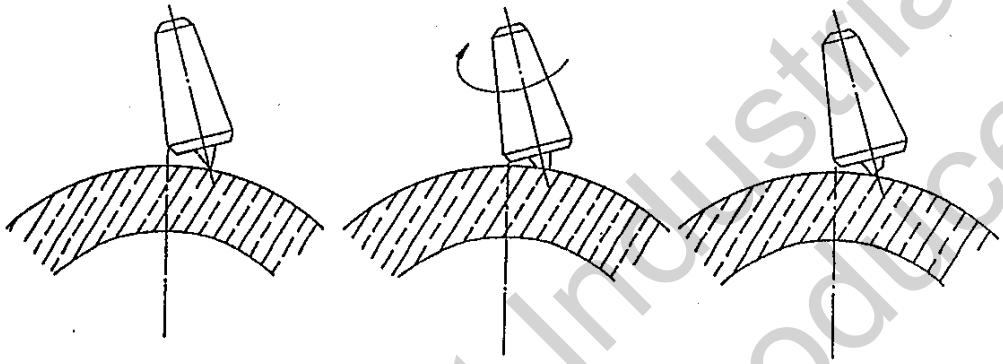

(b). Angle forming attachment

(1) Let the Attachment be attracted to the magnetic chuck, keeping a 90° right angle between the attachment and the wheel. The magnetic chuck should be kept level.

(2) The value in question will be the Sine of the angle times 50. That is B=Sinθ x 50

(3) Get a Block gauge the thickness of which equals that of B (or make one)

(4) Put this Block gauge under the base of the Sine Bar stand. Fix with the fastening bolts and the forming is done.

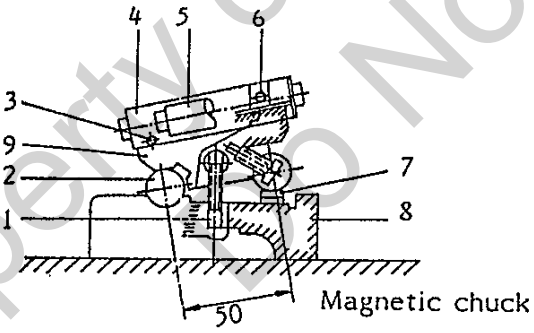

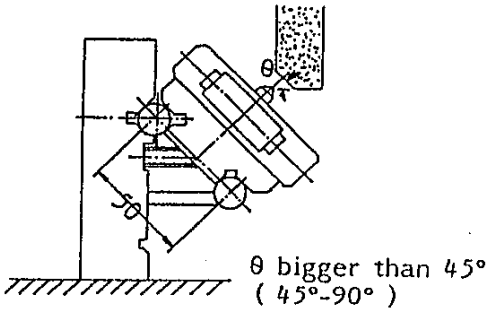

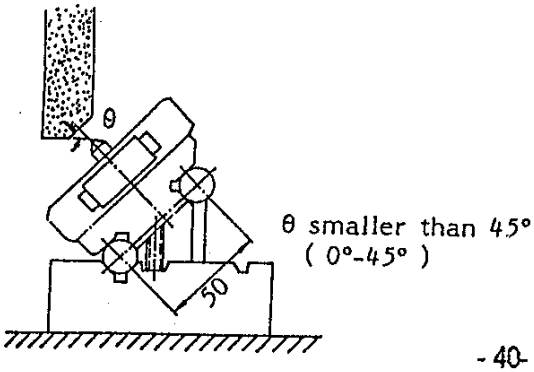

1. Fastening bolt
2. Mandrel
3. Slide adjustment bolt
4. Slide base
5. Handle
6. Diamond fixed hole
7. Block gauge
8. Build-in base
9. Sine Bar stand

(c). Sine Bar

The Sine Bar is used to chuck the inclined angle of the magnetic chuck, when the angle forming surface is large.

(1) The value in question equals the Sine of the angle times 100, B=Sinθ x 100

(2) Get a block gauge the thickness of which equals that of B.

(3) Put this gauge at one end of the Sine Bar and let it be attacted to the inclinable magnetic chuck. This Sine Bar shall be kept parallel to the longitudinal direction of the machine.

(4) Press the dial gauge against the surface of the Sine Bar and meanwhile turn the cross feed hand wheel, so that the saddle moves back and forth for the checking of the accurancy of the angle of the magnetic chuck

1. Mandrel
2. Sine Bar
3. Block gauge
4. Applicantion of the trigonometry
5. Inclincalb Magnetic Chuck
6. Mandrel of the Magnetic Chuck
7. Stop block

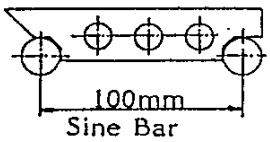

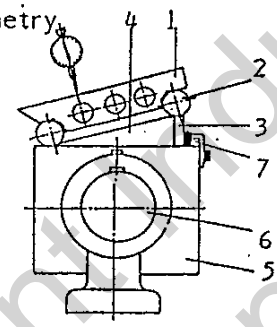

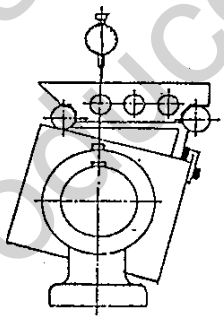

(d). Radius Forming Attachment

The Radius Forming Attachment is composed of a main stand, several swing rods and a diamond tool.

(1) Main Stand

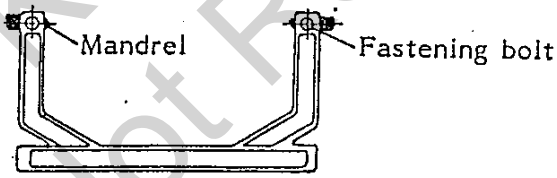

(2) Swing rod and diamond tool

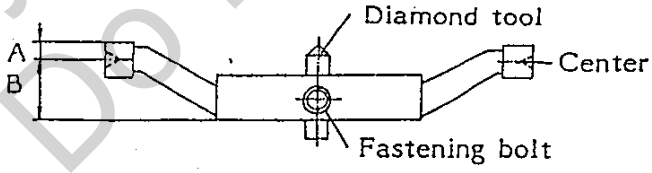

A name plate is attached to the swing rod with the A and B to mean:

A: the distance between the upper rim and the center

B: the distance between the bottom rim and the center

The R forming is the adjustment of the distance between the diamond tool and the swing rod center so that the R shaping results.

(3) To determine the concave and convex R:

a. If the tool is parallel to the center line, it equals OR.

b. To determine the convex R: Put the swing rod on a place disk. Put a block gauge of proper thickness under the diamond tool. Then R = X-A

c. To determine the small concave R

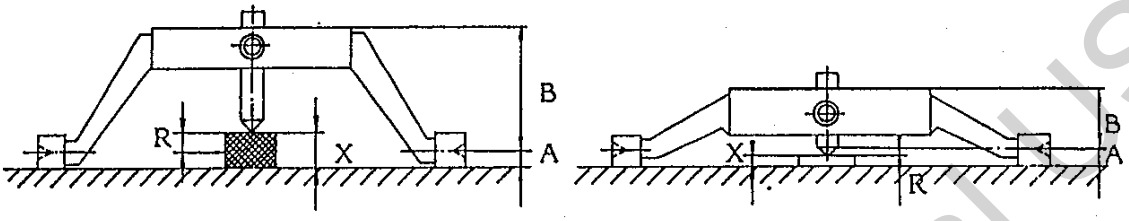

d. To determine the big concave R: R= B+X.

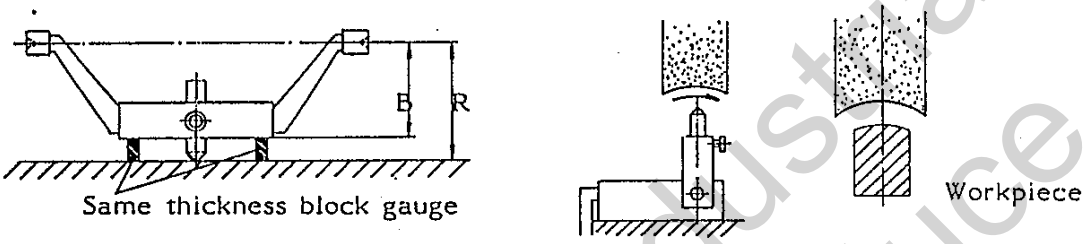

e. Note:

1. The base and side of the grinding wheel shall be well-dressed.
2. The Radius Forming Attachment shall be parallel to the grinding wheel.
3. The diamond tool shall be parallel to the Radius Forming Attachment.

(4) Operation of the Radius forming attachment:

a. Find the center of the grinding wheel. then fix the work table.

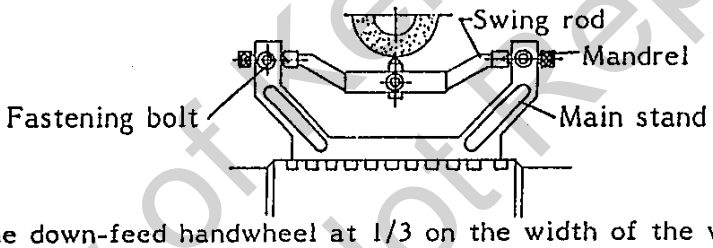

b. Turn the down-feed handwheel at 1/3 on the width of the wheel so that the wheel cuts into 0.02mm of the diamond tool. Now turn the cross feed handwheel to dress the grinding wheel, and turn the calibration reading on the down feed back to zero.

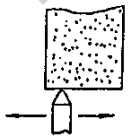

c. Turn the diamond tool over an angle 90° and elevate it into a proper position (greater than the R size in question)

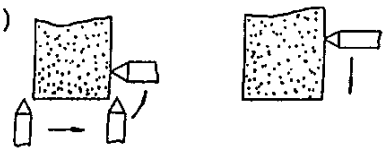

d. Elevate the grinding wheel so that it goes away from the diamond tool and the wheel in such a position that the distance betwen the side of the wheel and the center of the Diamond tool is just R.

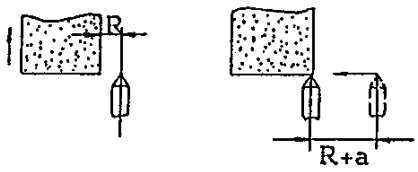

e. Move the diamond tool (R+a) leftward, with "a" found in the following table.

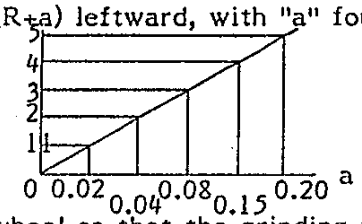

f. Turn the downfeed handwheel so that the grinding wheel approaches the diamond tool.

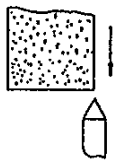

g. Turn the swing rods 90° each time, inching 0.05mm till the R is determined.

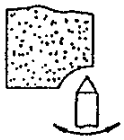

h. The wheel finally becomes the following shape.

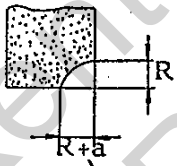

(e). Coolant System (Standard accessory)

Insert the power source plug in socket (at the rear side of electric control box).
Press the pushbutton switch to start the coolant pump, the pump should rotates in clockwise direction, if not, interchange the any two cords of three-cord cable.
Adjust coolant flow by turning the ball valve to suitable rate.
Cooling water collected from table and returns to coolant tank through return hose then filtered in the coolant tank by turns of cabinet #1,2,3,4.

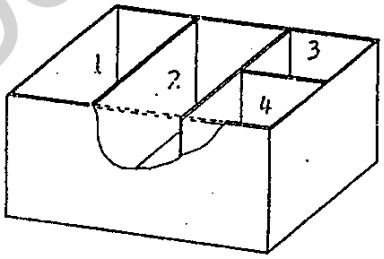

* Coolant tank capacity: 110 liters
* Coolant pump: 1/8 HP

(f) . Common cases in Side Grinding

(1)

In the case shown in the figure above, the side-grinding wheel and the work have a smaller contact surface, in which case the efficiency is higher, and the surface roughness is better.

(2)

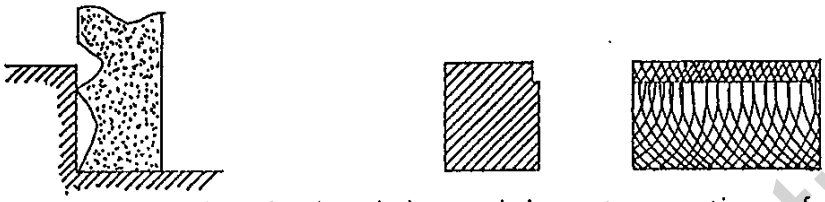

Inthe figure above, the wheel and the work have two sections of contact, and the surface of grinding is bad. The surface has to be corrected into the shape shown in (1).

(3)

The wheel did not cut to "Relief Angle", thus it contacts the whole face of the work, causing the surface of processing rough and rugged. Also, the greater face of contact will cause burns and cracks.

(4)

The "Relief Angle" of the wheel is lower than the surface of the work, so that the work face becomes two sections, the upper section resembling that in (3) and the lower section in (1). Now it is necessary to enlarge the "Relief Angle" part so that it will higher than the face of the work.

(5) If the spindle does not constitute a right angle with the work table surface, the side faces will turn out to be as shown :

(g) . Right Angle Grinding

(1) Tools

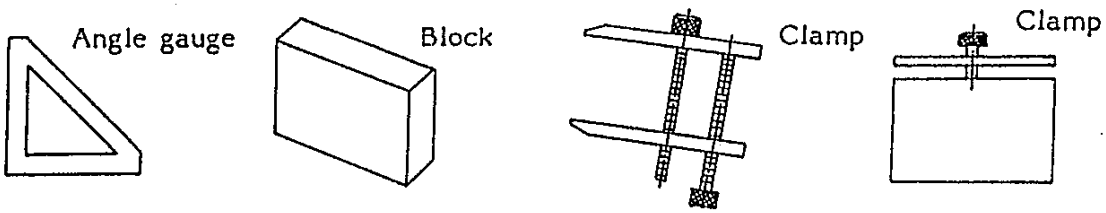

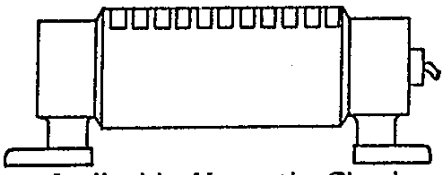

Inclinable Magnetic Chuck

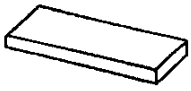

Block gauge

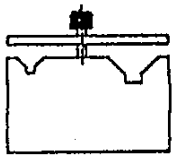

Clamp

(2) Use of the jigs and tools: take the grinding of the block of six faces A, B, C, D, E, F. For example:

a. Under 200mm:

* Grinding of the first basic face, or the surface grindingof A and B,

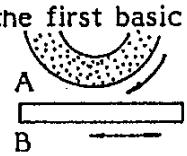

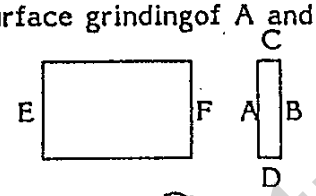

* Grinding of C and D

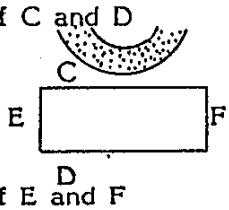

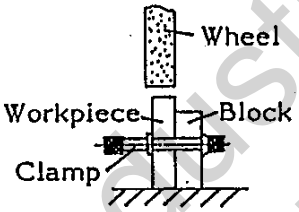

* Grinding of E and F

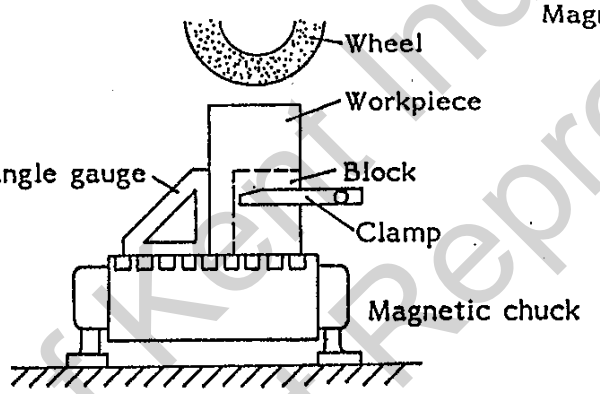

b. Over 200mm:

* Grinding of the first basic face or A,
* Grinding of C and D: turn the inclinable magnetic chuck into 90°

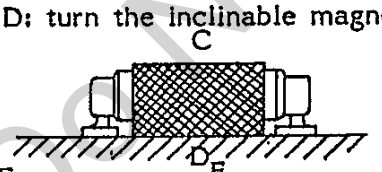

* Grinding of E and F

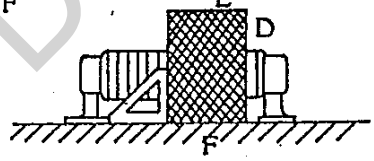

(3) Precaution: The grinding of right angle depends on the patience and clever mindedness of the operator for its precision. For inatance, whether the burrs after grinding is done well, whether the tools are kept clean, whether the work table are kept clean, the accuracy of the angle gauge, etc. all will have a direct influence over the precision of the product.

M.

COMPLETE KNOCKDOWN DRAWINGS & PARTS LISTS

****

WHEN ORDERING PARTS, PLEASE MENTION:

1. MACHINE MODEL & SERIAL NUMBER,
2. ITEM NUMBER,
3. PARTS NUMBER AND NAME,
4. QUANTITY.

2040,2060AH(AHD) COLUMN ASS'Y

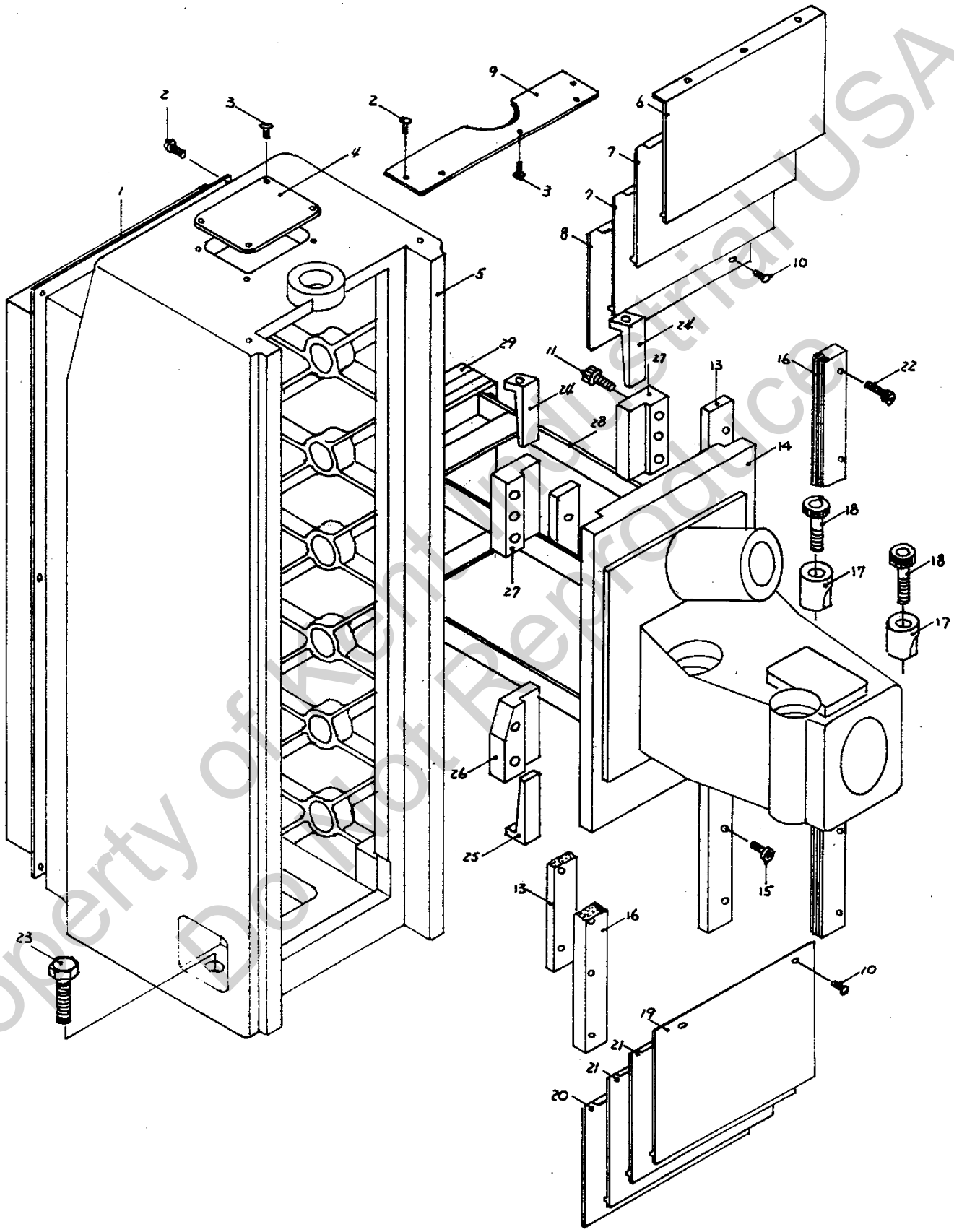

2040,2060AH(AHD) COLUMN ASS'Y

UP COLUMN ASS'Y

(2040,2060SERIES)

Index No.	Parts No.	Parts Name	Q'ty
1.	2040-303A	Column Rear Cover	1
2.	W 1/4"*3/4"L	Round Head Screw	8
3.	W 3/16"*3/4"L	Round Head Screw	7
4.	2040-304	Column Upper Cover	1
5.	2040-201	Column	1
6.	2040-306	Dust Shield	1
7.	2040-307	Dust Shield	2
8.	2040-308	Dust Shield	1
9.	2040-305	Dust Shield Fixed Plate	1
10.	W 3/16"*3/4"L	Flat Head Machine Screw	4
11.	W 5/8"*3"L	Socket Head Cap Screw	8
13.	2040-301	Vertical Slide Way	2
14.	2040-202	Head A(Spindle Seat)	1
15.	W 3/8"*1 1/4"L	Socket Head Cap Screw	18
16.	2040-302	Shield Guide	2
17.	2040-312	Spindle Stopper	2
18.	W 3/4"*2 1/2"L	Socket Head Cap Screw	2
19.	2040-309	Dust Shield	1
20.	2040-311	Dust Shield	1
21.	2040-310	Dust Shield	2
22.	W 1/4"*1"L	Socket Head Cap Screw	12
23.	W 1"*2 1/2"L	Hexagonal Head Cap Screw	5
24.	2040-229	Tapper Plate	2
25.	2040-229-1	Tapper Plate	2
26.	2040-228	Fixed Plate Of Head A(Upper)	2
27.	2040-227	Fixed Plate Of Head A(Lower)	2
28.	2040-205	Frame Of Balance Weight	1
29.	2040-206	Balance Weight	3

2040,2060AH(AHD) CROSS-FEED ASS'Y

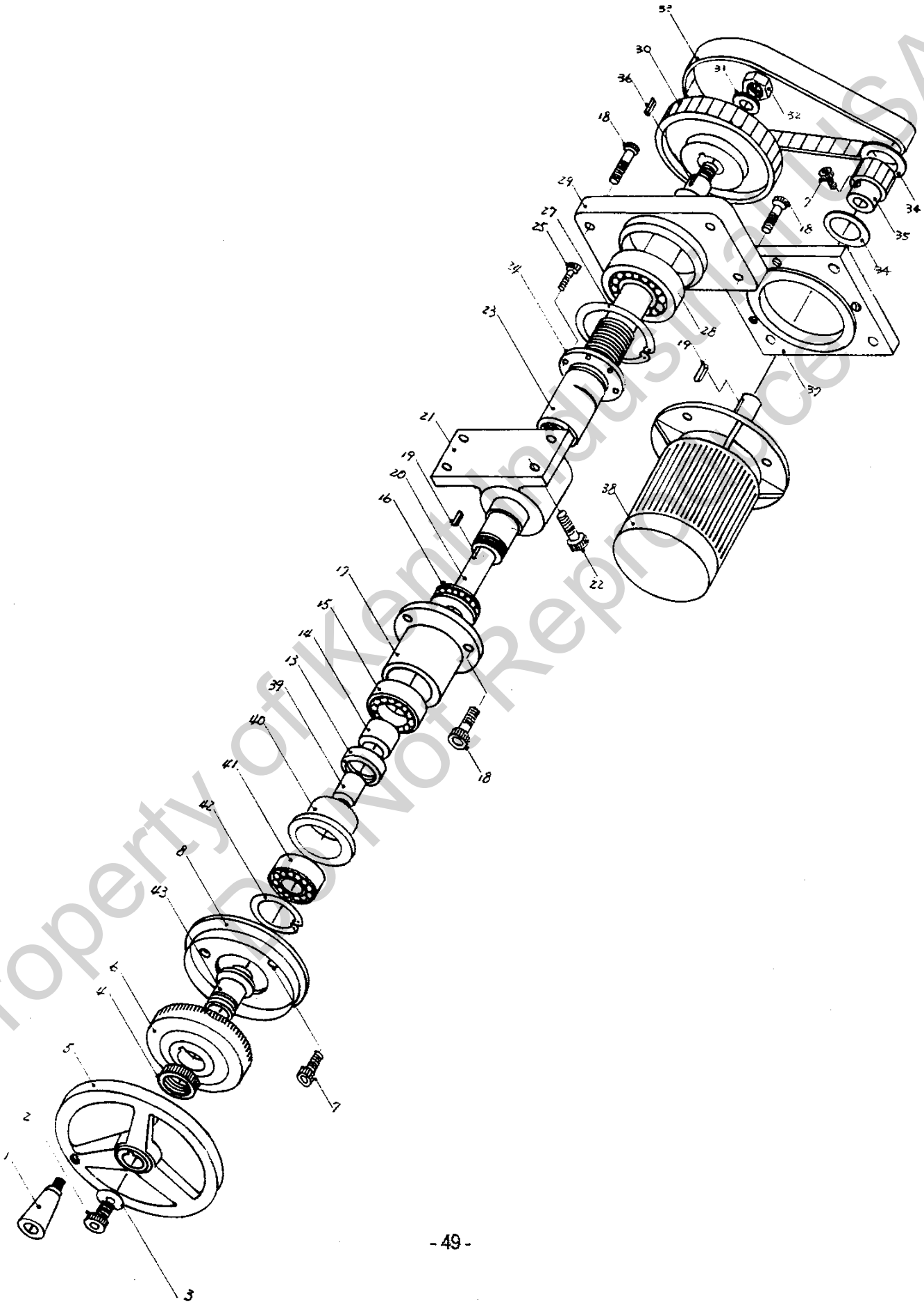

CROSS FEED ASS'Y
(2040,2060SERIES)

Index No.	Parts No.	Parts Name	Q'ty
1.	1020-728	Head Grip	1
2.	W 1/4"*5/8"L	Socket Head Cap Screw	1
3.	2040-414	Washer	1
4.	2040-402	Nut	1
5.	1020-704	Hand Wheel with Clutch Gear	1
6.	2040-404	Graduation Dial	1
7.	W 1/4"*1/2"L	Socket Head Cap Screw	7
8.	2040-405	Dial Holder	1
13.	2448-432B	Lock Nut	1
14.	2040-409	Washer	1
15.	B5205	Bearing	1
16.	51205	Bearing	1
17.	2448-435A	Bearing Housing	1
18.	W 3/8"*3/4"L	Socket Head Cap Screw	1
19.	5*5*20L	Key	2
20.	2040-435	Cross Feed Lead Screw	1
21.	2040-430	Cross Feed Nut Screw	1
22.	W 1/2"*1 3/4"L	Socket Head Cap Screw	15
23.	2040-436	Lead Screw Base	2
24.	2040-434	Backlash Adjuster	1
25.	W 1/4"*5/8"L	Socket Head Cap Screw	1
26.	W 5/16"*5/8"L	Socket Head Cap Screw	4
27.	R-52	Snap Ring	1
28.	B1205Z	Bearing	1
29.	2448-443	Bearing Housing	1
30.	2040-411	Timing Belt Pulley	1
31.	W 1/2"	Washer	1
32.	W 1/2"	Hexagonal Nut	1
33.	P 3/8"*330H	Timing Belt	1
34.	2040-413	Timing Belt Pulley Flange	2
35.	2040-412	Timing Belt Pulley	1
36.	5*5*25L	Key	1
37.	2448-447	Cross Feed Motor Fixed Plate	1
38.	1/4 HP*6P	Cross Feed Motor	1
39.	2040-442	Washer	1
40.	2040-440	Bearing Seat	1
41.	B2203	Bearing	1
42.	R40	Snap	1
43.	2040-441	Set Spacer	1

2040,2060AH(AHD) LONG HAND-FEED ASS'Y

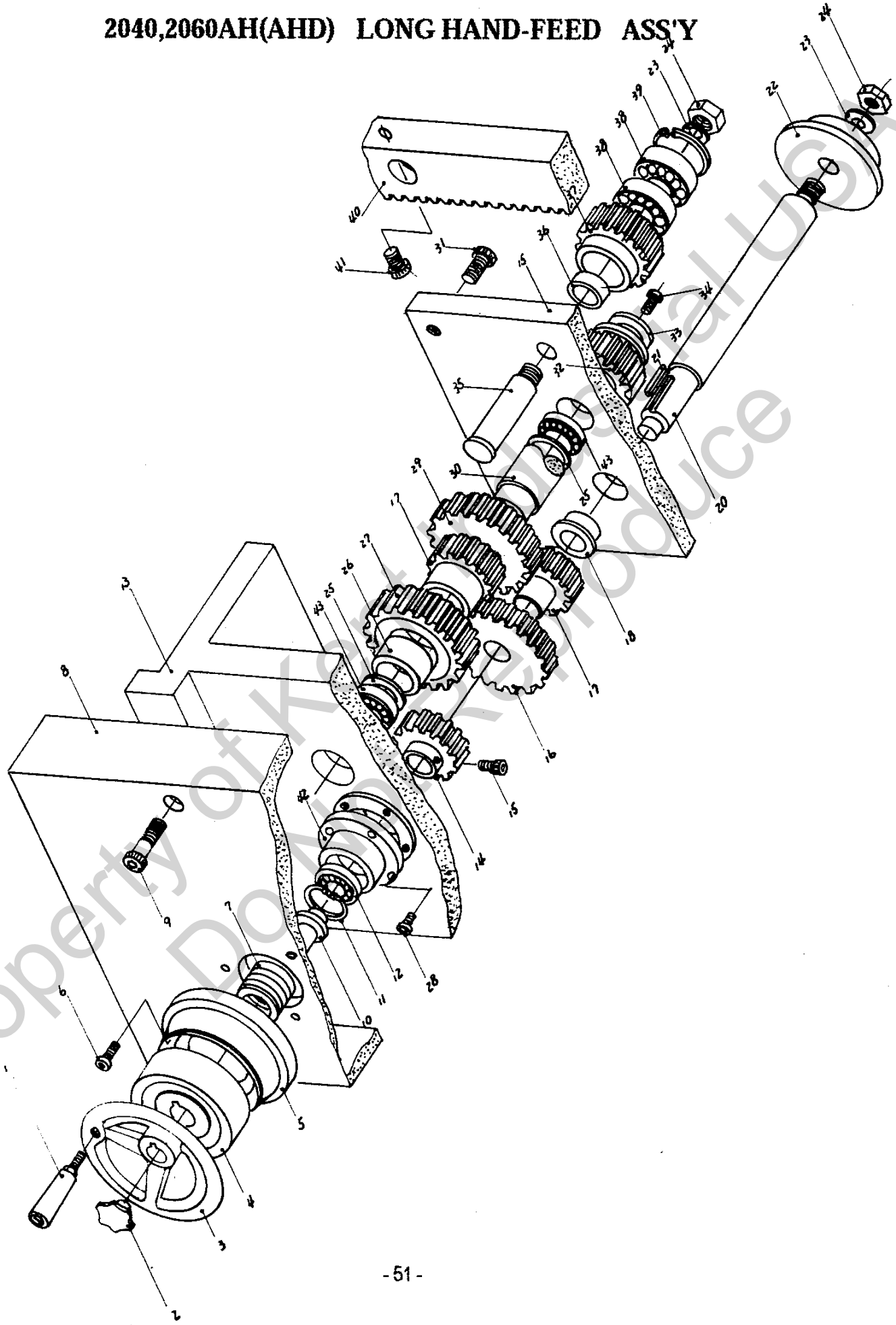

LONGITUDINAL HANDFEED ASS'Y
(2040,2060 SERIES)

P. 1OF2

Index No.	Parts No.	Parts Name	Q'ty
1.	1020-728	Hand Grip	1
2.	1020-729	Cap Wheel	1
3.	1020-714	Hand Wheel	1
4.	2040-521	Dial	1
5.	2040-523	Dial Holder	1
6.	W 1/4"*1/2"L	Socket Head Cap Screw	3
7.	2040-520	Spring	1
8.	2040-117	Base Plate	1
9.	W 5/16"*6 1/2"L	Socket Head Cap Screw	6
10.	2040-519	Sleeve	1
11.	R-47	Snap Ring	1
12.	B6204Z	Bearing	1
13.	2040-503	Gear Housing	1
14.	2040-517	Gear	1
15.	W 1/4"*1/2"L	Set Screw	1
16.	2040-513	Gear	1
17.	2040-512	Gear	2
18.	2040-505	Bush	1
19.	2040-504	Gear Housing Plate	1
20.	2040-522	Shaft	1
21.	5*5*40L	Key	1
22.	2040-516	Spacer	1
23.	W 1/2"	Washer	2

LONGITUDINAL HANDFEED ASS'Y
(2040,2060AHD)

Index No.	Parts No.	Parts Name	Q'ty
24.	W 1/2"	Hexagonal Nut	2
25.	2040-506	Bush	2
26.	2040-514	Spacer	1
27.	2040-524	Gear	1
28.	W 5/16"*1 1/2"L	Socket Head Cap Screw	4
29.	2040-511	Gear	1
30.	2040-515	Shaft	1
31.	W 5/16"*1"L	Socket Head Cap Screw	4
32.	2040-510	Gear	1
33.	W 1/4"	Washer	1
34.	W 1/4"*1/2"L	Socket Head Cap Screw	1
35.	2040-509	Shaft	1
36.	2040-508	Washer	1
37.	2040-507	Gear	1
38.	B6203Z	Bearing	2
39.	R-40	Snap Ring	1
40.	2448-114	Rack	1
41.	W 3/8"*1"L	Socket Head Cap Screw	3
42.	2040-518	Bearing Housing	1
43.	B6003Z	Bearing	2

2040,2060AH DOWN-FEED ASS'Y

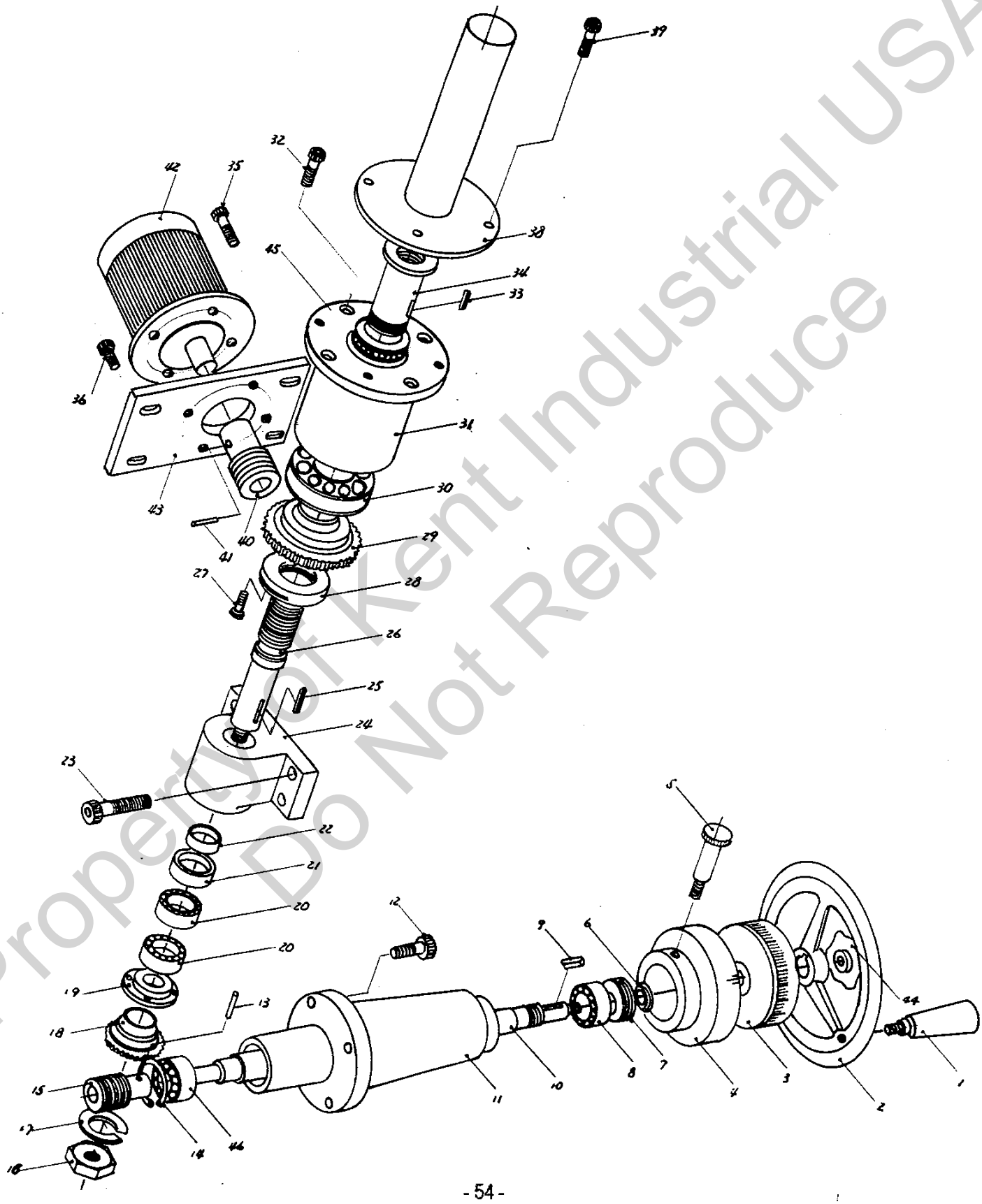

DOWNFEED ASS'Y
(2040,2060AH SERIES)

Index No.	Parts No.	Parts Name	Q'ty
1.	1020-728	Hand Grip	1
2.	1020-714	Hand Wheel	1
3.	2040-226	Graduation Dial	1
4.	2040-225	Fixed Indicator	1
5.	1020-508	Adjusting Screw	1
6.	1020-410	Nut	2
7.	2040-219	Nut	1
8.	B5402Z	Bearing	1
9.	5*5*30L	Key	1
10.	2040-222	Shaft	1
11.	2040-221	Shaft Housing	1
12.	W 3/8"*1 1/2"L	Socket Head Cap Screw	4
13.	φ 5*30L	Pin	1
14.	R-47	Snap Ring	1
15.	2040-216	Worm	1
16.	W 3/4"	Hexagonal Nut	1
17.	W 3/4"	Spring Washer	1
18.	2040-213	Worm Gear	1
19.	2048-434	Bearing Housing Cover	1
20.	7205 P5	Bearing	2
21.	2040-212	Spacer	1
22.	2040-215	Spacer	1
23.	W 1/2"*1 3/4"L	Socket Head Cap Screw	4

DOWNFEED ASS'Y
(2040,2060AH SERIES)

Index No.	Parts No.	Parts Name	Q'ty
24.	2040-214	Bearing Housing	1
25.	7*7*25L	Key	1
26.	2040-210	Down-Feed Lead Screw	1
27.	W 1/4"*1/4"L	Socket Head Cap Screw	1
28.	2040-212-1	Nut	1
29.	2040-209	Worm	1
30.	B6210Z	Bearing	1
31.	2040-208	Bearing Housing	1
32.	W 3/8"*3/4"L	Socket Head Cap Screw	4
33.	5*7*25L	Key	1
34.	2040-211	Lead-Screw Nut	1
35.	W 5/16"*1"L	Socket Head Cap Screw	4
36.	W 5/16"*1"L	Socket Head Cap Screw	4
37.			
38.	2040-204A	Down-Feed Lead-Screw Housing	1
39.	W 5/16"*3/4"L	Socket Head Cap Screw	4
40.	2040-224	Worm	1
41.	φ 6*30L	Pin	1
42.	1/4HP*4P	Motor	1
43.	2040-223	Motor Plate	1
44.	1020-729	Cap Nut	1
45.	B51108	Bearing	1
46.	B2204Z	Bearing	1

2040,2060AHD DOWN-FEED ASS'Y

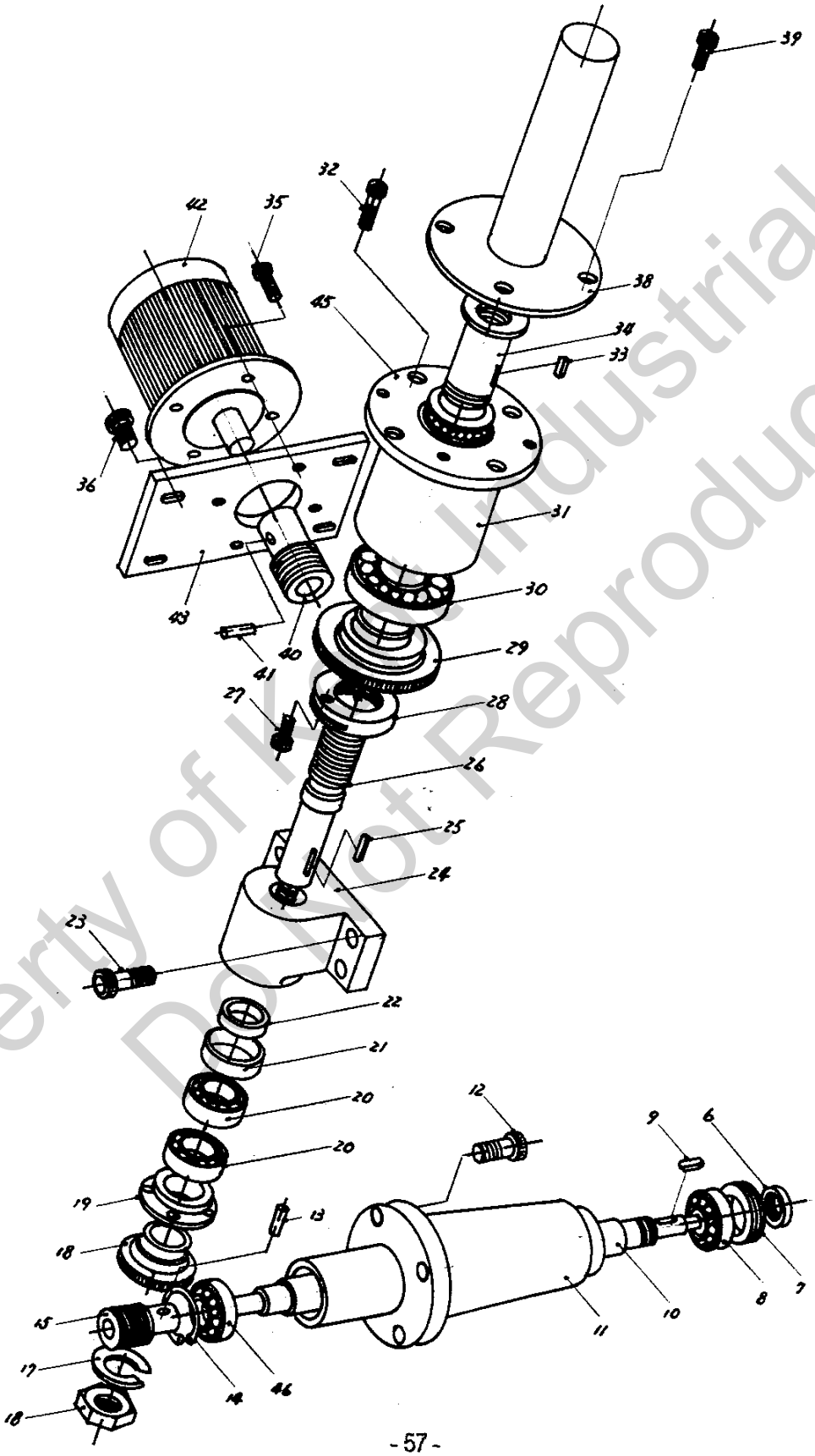

DOWNFEED ASS'Y
(2040,2060AHD SERIES)

Index No.	Parts No.	Parts Name	Q'ty
6.	1020-410	Nut	2
7.	2040-219	Nut	1
8.	B5402Z	Bearing	1
9.	5*5*30L	Key	1
10.	2040-217	Shaft	1
11.	2040-218	Shaft Housing	1
12.	W 3/8"*1 1/2"L	Socket Head Cap Screw	4
13.	φ 5*30L	Pin	1
14.	R-47	Snap Ring	1
15.	2040-216	Worm	1
16.	W 3/4"	Hexagonal Nut	1
17.	W 3/4"	Spring Washer	1
18.	2040-213	Worm Gear	1
19.	2048-434	Bearing Housing Cover	1
20.	7205 P5	Bearing	2
21.	2040-212	Spacer	1
22.	2040-215	Spacer	1
23.	W 1/2"*1 3/4"L	Socket Head Cap Screw	4
24.	2040-214	Bearing Housing	1
25.	7*7*25L	Key	1

DOWNFEED ASS'Y
(2040,2060AHD SERIES)

Index No.	Parts No.	Parts Name	Q'ty
26.	2040-210	Down-Feed Lead Screw	1
27.	W 1/4"*1/4"L	Socket Head Cap Screw	1
28.	2040-212-1	Nut	1
29.	2040-209	Worm	1
30.	B6210Z	Bearing	1
31.	2040-208	Bearing Housing	1
32.	W 3/8"*3/4"L	Socket Head Cap Screw	4
33.	5*7*25L	Key	1
34.	2040-211	Lead-Screw Nut	1
35.	W 5/16"*1"L	Socket Head Cap Screw	4
36.	W 5/16"*1"L	Socket Head Cap Screw	4
38.	2040-204A	Down-Feed Lead-Screw Housing	1
39.	W 5/16"*3/4"L	Socket Head Cap Screw	4
40.	2040-224	Worm	1
41.	φ 6*30L	Pin	1
42.	1/4HP*4P	Motor	1
43.	2040-223	Motor Plate	1
45.	B51108	Bearing	1
46.	B2204Z	Bearing	1

2040,2060AHD AUTO DOWN-FEED ASS'Y

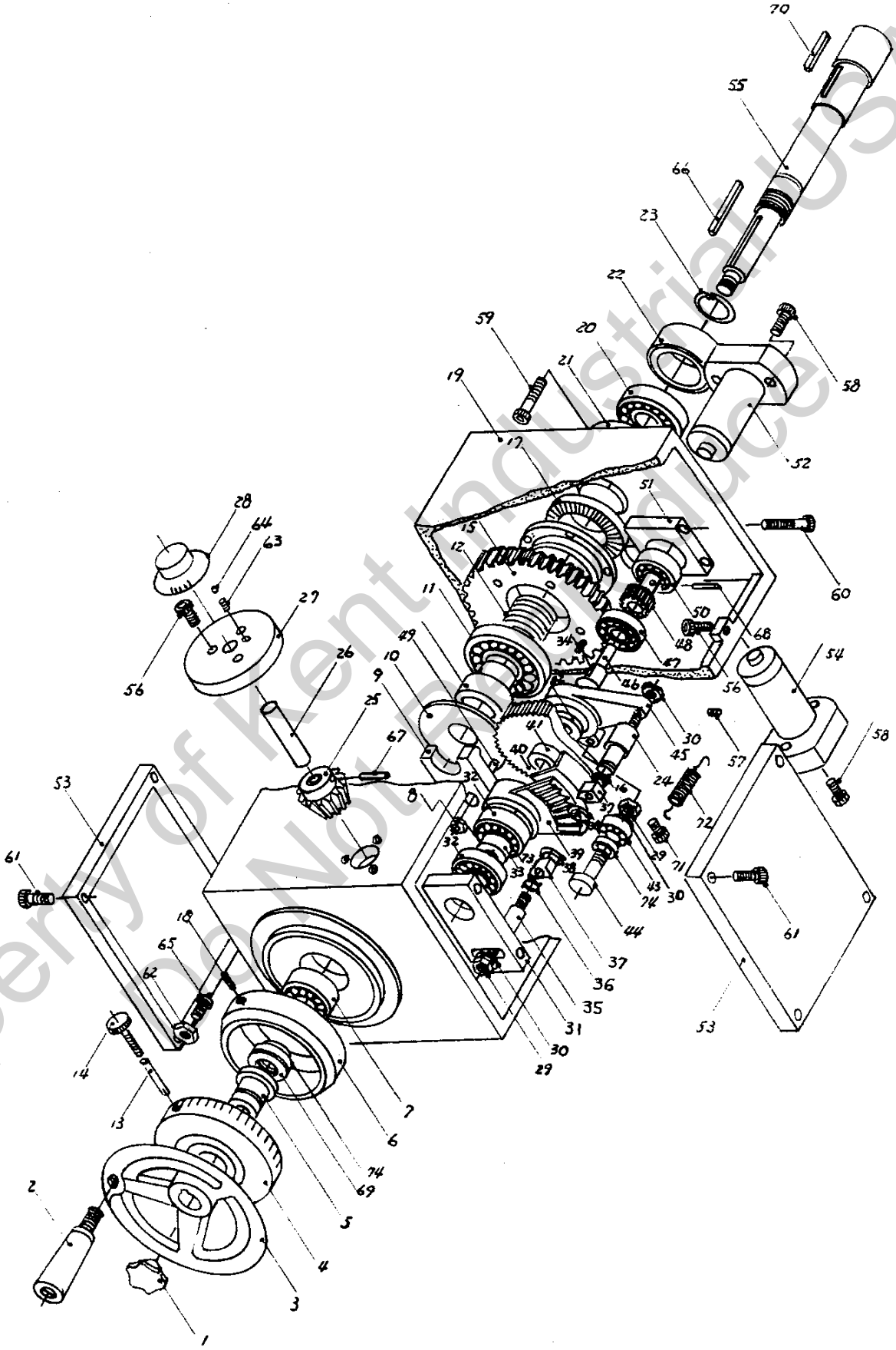

AUTO-DOWNFEED UNIT ASS'Y

(2040,2060AHD SERIES)

P. 1OF2

Index No.	Parts No.	Parts Name	Q'ty
1.	1020-729	Cap Nut	1
2.	1020-728	Hand Grip	1
3.	1020-714	Hand Wheel	1
4.	2040-801	Graduation Dial	1
5.	1020-N804	Collar	1
6.	2040-803	Graduation Dial Holder	1
7.	B6204Z	Bearing	1
8.	1020-N842	Spacer	1
9.	1020-N810	Holder	1
10.	1020-N811	Holder	1
11.	B6006Z	Bearing	1
12.	1224-812	Spring	1
13.	φ 6*30L	Pin	1
14.	1020-N808	Fixed Screw	1
15.	2040-813	Gear	1
16.	1020-N828	Spring	1
17.	1020-N814	Clutch	1
18.	W 1/4"*3/8"L	Set Screw	1
19.	2040-802	Gear Box	1
20.	B6005Z	Bearing	1
21.	1020-N845	Connect Bracket	1
22.	1020-N843	Spacer	1
23.	R-35	Snap Ring	1
24.	1020-N826	Shaft	1
25.	1020-N830	Bevel Gear	1
26.	1020-N831	Pin	1
27.	1020-N832	Plate	1
28.	1020-N833	Pre-Set Dial	1
29.	W 3/4"	Hexagonal Nut	2
30.	W 3/4"	Spring Washer	2
31.	1020-N815	Bracket	1
32.	B6300Z	Bearing	3
33.	1020-N817	Spacer	1
34.	5*5*30L	Key	1
35.	1020-N815-1	Pin	1
36.	1020-N827	Spring	1
37.	1020-N825	Transmission Claw	1

AUTO-DOWNFEED UNIT ASS'Y
(2040,2060AHD SERIES)

Index No.	Parts No.	Parts Name	Q'ty
38.	E7	Snap Ring	2
39.	1020-N818	Bevel Gear (Half)	1
40	1020-N820	Ratcher Gear	1
41.	1020-N821	Spacer	1
42.	B608ZZ	Spacer	1
43.	W 1/4"*1/4"L	Bearing	1
44.	1020-N823	Pin	1
45.	1020-N822	Transmission Arm	1
46.	1020-N816	Shaft	1
47.			
48.	2040-812	Gear	1
49.	W 1/4"*3"L	Socket Head Cap Screw	1
50.	B62012	Bearing	1
51.	1020-N829	Bracket	1
52.	1020-N838	Cylinder	1
53.	2040-809	Cover	2
54.	1224-881	Cylinder	1
55.	2040-807	Shaft	1
56.	W 3/16"*1/2"L	Socket Head Cap Screw	3
57.	W 3/16"*1/4"L	Set Screw	1
58.	W 3/16"*1"L	Socket Head Cap Screw	8
59.	W 1/4"*3/4"L	Socket Head Cap Screw	4
60.	W 1/4"*1 1/4"L	Socket Head Cap Screw	4
61.	W 1/4"*3/8"L	Socket Head Cap Screw	8
62.	W 1/4"	Hexagonal Nut	1
63.	W 1/4"	Spring	1
64.	φ4	Steel Ball	1
65.	W 1/4"*5/8"L	Round Head Screw	1
66.	5*5*40L	Key	1
67.	φ3*30L	Pin	1
68.	φ30*10L	Pin	1
69.	1020-N805	Spacer	1
70.	5*5*35L	Key	1
71.	W 3/16"*3/8"L	Socket Head Cap Screw	1
72.	1020-N822-1	Spring	1
73.	R-35	Snap Ring	1
74.	1020-N806	Nut	1

2040,2060AHD SPINDLE ASS'Y

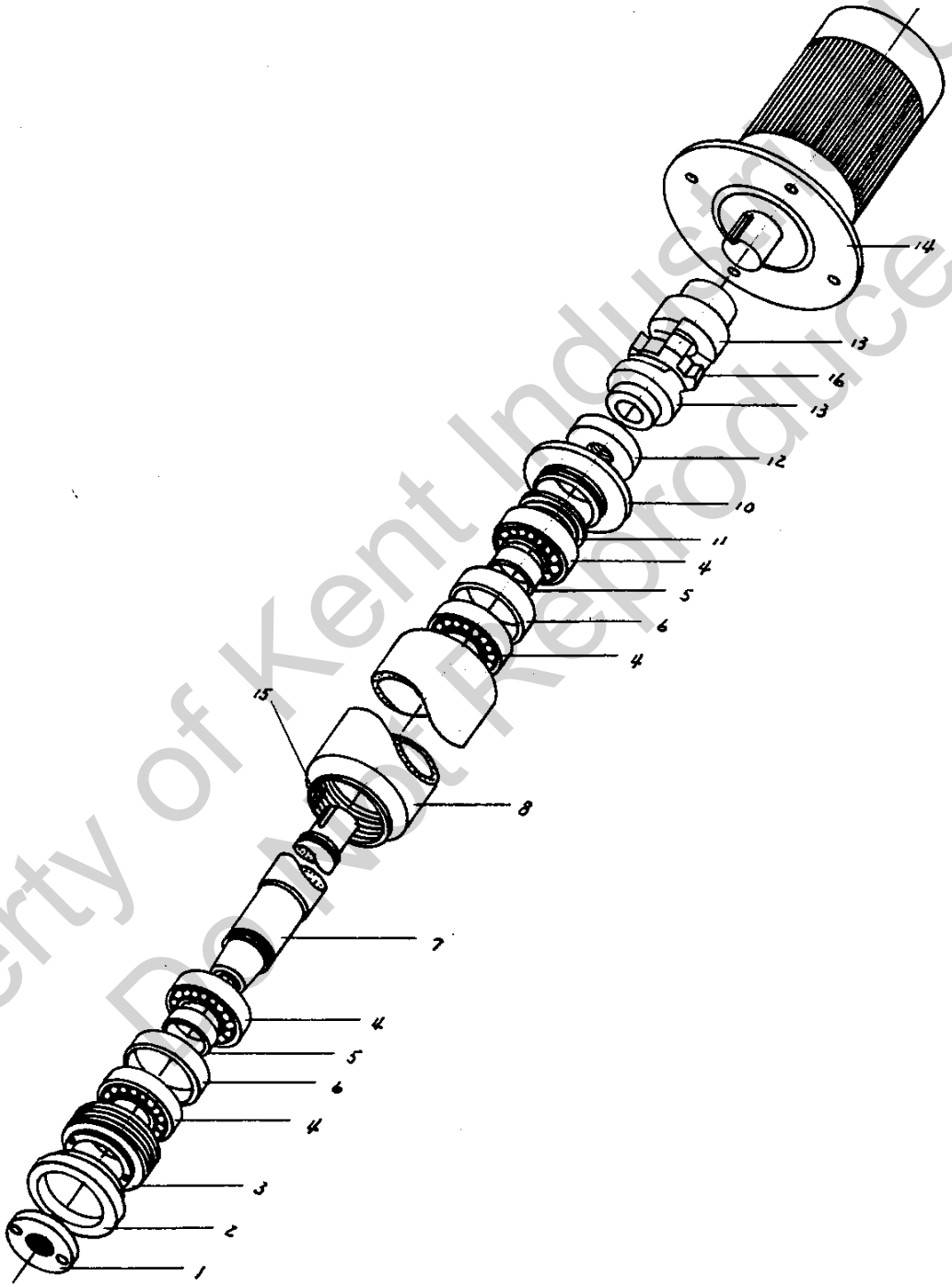

SPINDLE SET ASS'Y
(2040,2060 SERIES)

Index No.	Parts No.	Parts Name	Q'ty
1.	2040-107	Spindle Cover (Fornt)	1
2.	2040-105	Spindle Cover (Front)	1
3.	2040-106	Spindle Nut	1
4.	B7210 P4	Bearing	4
5.	2040-108	Spacer	2
6.	2040-109	Spacer	2
7.	2040-104	Spindle Shaft	1
8.	2040-103	Spindle Houshing	1
9.			
10.	2040-112	Spindle Cover (Rear)	1
11.	2040-110	Spacer	1
12.	2040-111	Spindle Nut	1
13.	1632-111	Coupling	2
14.	10HP*4P	Spindle Motor	1
15.	10*8*35L	Key	1
16.	1632-113	Rubber Coupling	1

2040,2060AHD CYLINDER SET ASS'Y

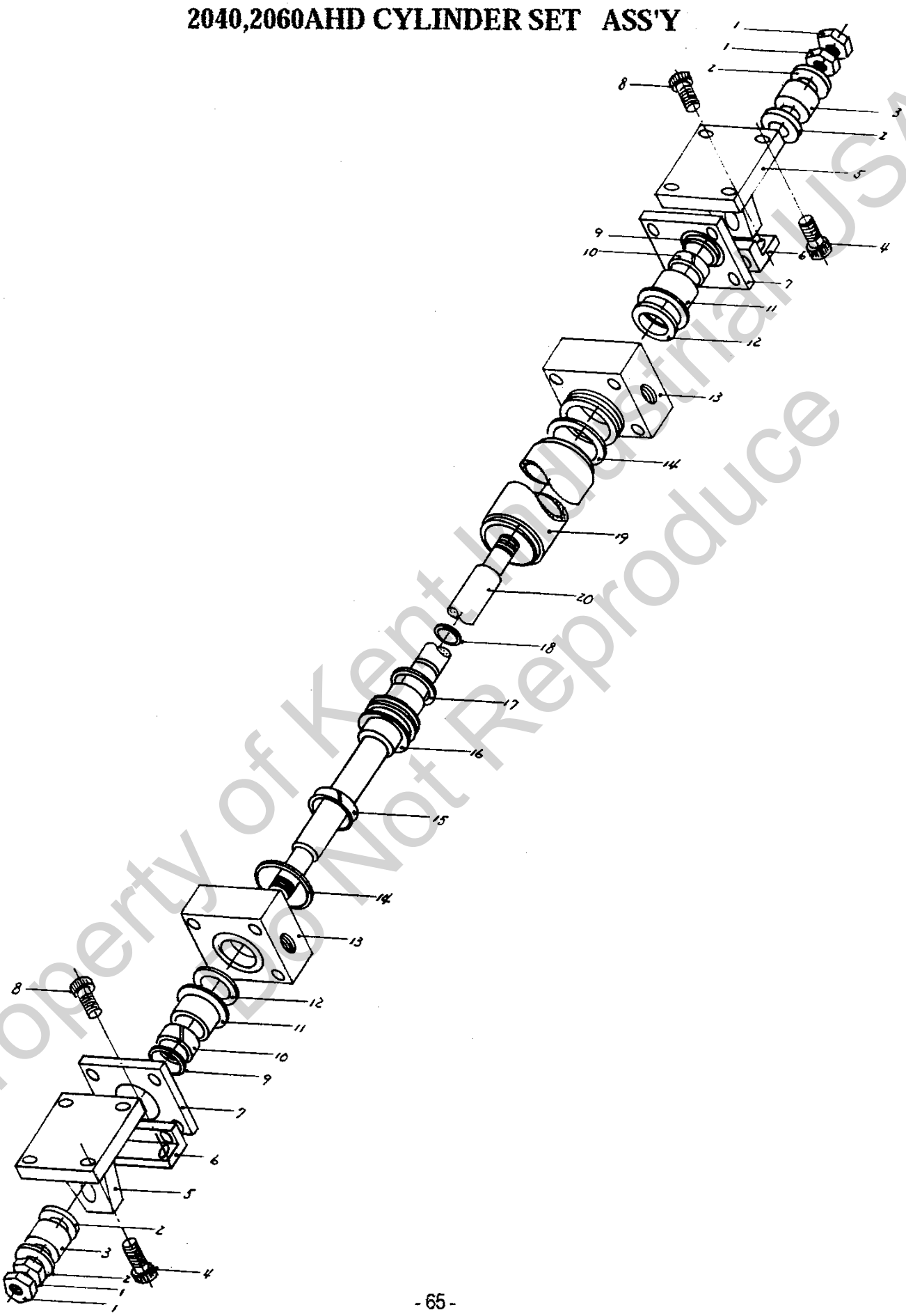

CYLINDER SET ASS'Y
(2040,2060 SERIES)

Index No.	Parts No.	Parts Name	Q'ty
1.	W 3/4"	Hexagonal Nut	4
2.	2448-610	Washer	4
3.	2448-609	Rubber Pad	2
4.	W 1/2"*1 1/2"L	Socket Head Cap Screw	8
5.	2448-611	Cylinder Bracket	2
6.	2448-604	End Bracket	2
7.	2040-608	Cylinder Clamper	2
8.	W 1/2"*1"L	Socket Head Cap Screw	4
9.	LH 25	Dust Seal	2
10.	30*25*9.7	Slide Seal	2
11.	2040-606	Auxliary	2
12.	USH 25	U Packing	2
13.	2040-602	End Cover	2
14.	G 40	O-Ring	2
15.	40*35*9.7	Slide Seal	1
16.	2040-605	Piston	1
17.	P 39	O-Ring	1
18.	P 21	O-Ring	1
19.	2040-601(for 2040 series)	Cylinder Pipe	1
	2060-601(for 2060 series)	Cylinder Pipe	1
20.	2040-603(for 2040 series)	Cylinder Rod	1
	2060-603(for 2060 series)	Cylinder Rod	1

2040, 2060AH(AHD) VALVE ASS'Y

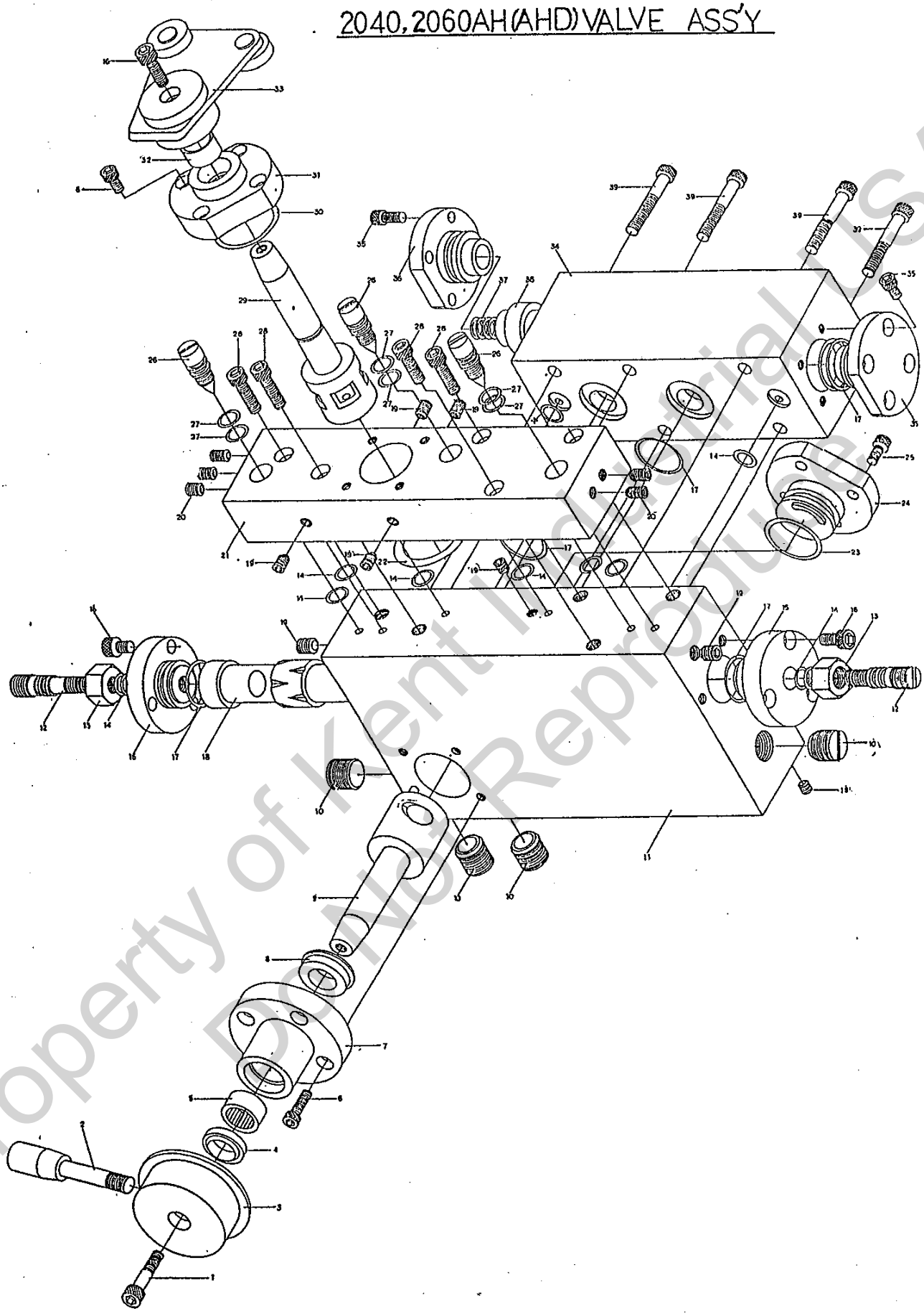

VALVE ASS'Y
(2040,2060SERIES)

Index No.	Parts No.	Parts Name	Q'ty
1.	W 1/4"*5/8"L	Socket Head Cap Screw	1
2.	1020-627	Flow Control Lever	1
3.	1020-620	Flow Control Knob	1
4.	DH15	Oil Seal	1
5.	HK1516	Niddle	1
6.	W 3/16"*5/8"L	Socket Head Cap Screw	8
7.	2040-625 1/2"L	Ring Retainer	1
8.	RE-15	Oil Seal	1
9.	2040-625	Flow Control Valve	1
10.	W 5/8"*1/2"L	Set Screw	4
11.	2048-612	Valve Body	1
12.	2040-617	Adjusting Screw	2
13.	W 3/8"	Hexagonal Nut	2
14.	P9	O-Ring	10
15.	2048-616	Side Cover	2
16.	W 1/4"*1/2"L	Socket Head Cap Screw	7
17.	G22	O-Ring	8
18.	2048-615	Pilot Piston	1
19.	W 5/16"*3/8"L	Set Screw	8
20.	W 5/16"*1/2"L	Set Screw	5
21.	2048-613	Direction Valve Body	1
22.	G32	O-Ring	1
23.	G25	O-Ring	1
24.	2048-627	Side Cover	1
25.	W 3/16"*1/2"L	Socket Head Cap Screw	3
26.	2048-619	Adjusting Screw	3
27.	P8	O-Ring	6
28.	W 1/4"*1"L	Socket Head Cap Screw	5
29.	2048-624	Direction Control Shaft	1
30.	G30	O-Ring	1
31.	2048-623	Ring Retainer	1
32.	B1517	Bearing	1
33.	1020-616	DirectionControl Arm	1
34.	2048-614	Direction Valve Body	1
35.	W 3/16"*5/16"L	Socket Head Cap Screw	8
36.	2048-620	Side Cover	2
37.	2048-622	Spring	1
38.	2048-621	Direction Control Shaft	1
39.	W 1/4"?*2 1/4"L	Socket Head Cap Screw	6

2040,2060AH HYDRAULIC PUMP UNIT ASS'Y

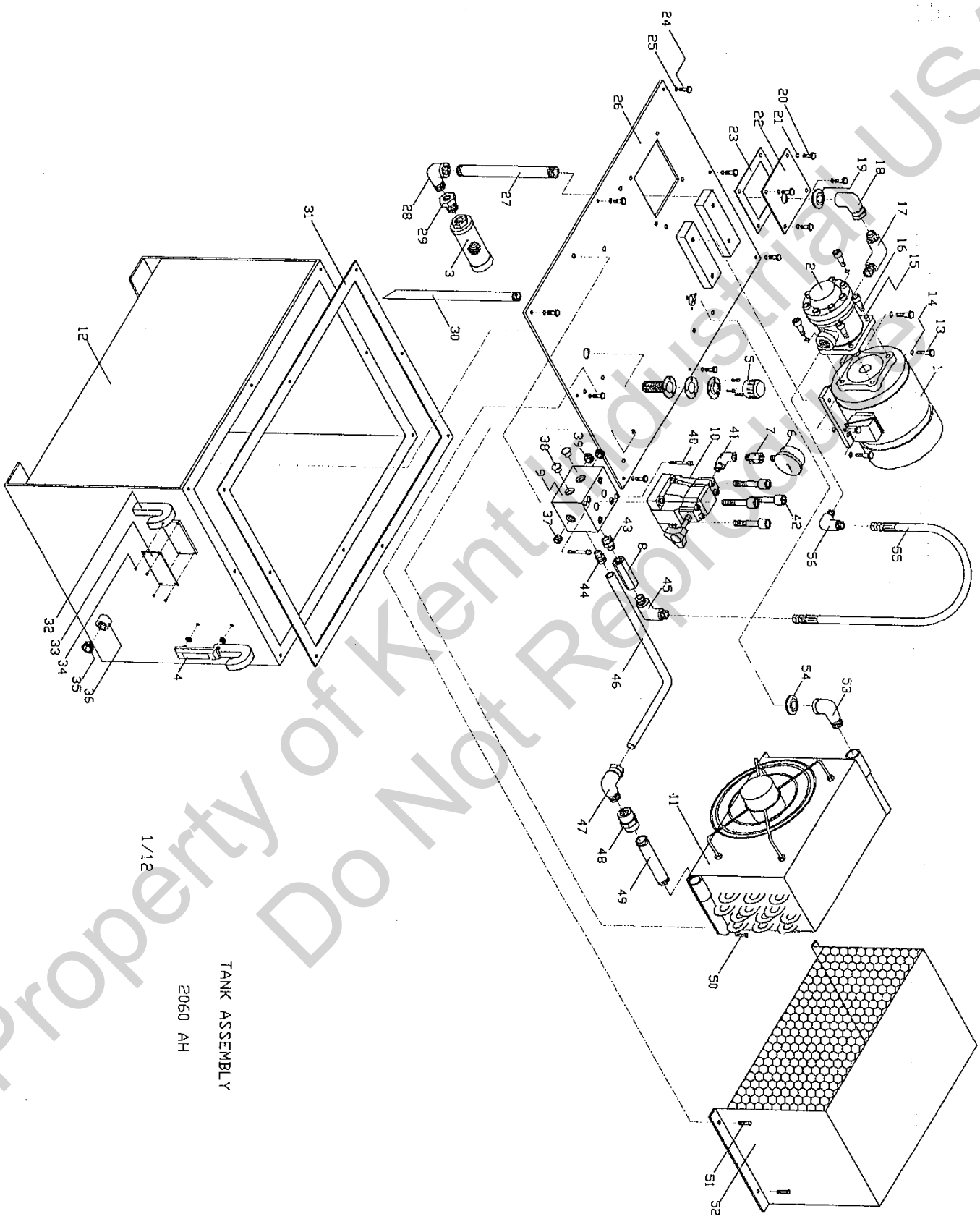

HYDRAULIC PUMP UNIT ASS'Y

(2040,2060AH)

Index No.	Parts No.	Parts Name	Q'ty
1.	5HP*4P	Motor	1
2.	VPNCG-F26-2-30	Pump	1
3.	SS-1.25-100	Oil Filter	1
4.	KS-5"	Oil Level Indicator	1
5.	AB-1163	Cover Of Oil Fill Cover	1
6.	2 1/2"*70KG	Pressure Gauge	1
7.	1/4"PT	Gauge Cock	2
8.	CIT-06-05-10	Check Valve	2
9.	EM-370A	Manifold Board	1
10.	HRF-G06-1-10	Relief	1
11.	EM268	Oil Cooler	1
12.	910*650*450	Tank	1
13.	M10*30L	Hexagonal Head Screw	1
14.	SWM10	Spring Washer	1
15.	SWM10	Spring Washer	1
16.	M10*30L	Socket Head Cap Screw	2
17.	1"PT*1"PS	Connector (90°)	1
18.	1"PT(F)*1"PS(M)	Universal Connector (90°)	4
19.	ST-08	Dust Rubber	8
20.	M8*20L	Hexagonal Head Screw	4
21.	SWM8	Spring Washer	1
22.	CP-2060-1-1	Cover	1
23.	SS-2060-1-1	Asbestos Packing	2
24.	M8*20L	Hexagonal Head Screw	8
25.	SWM8	Spring Washer	1
26.	CT-2060-1-1	Cover Of Tank	1
27.	1"PT	Zine-Plate Pipe	1
28.	1"PT(F)*1"PT(M)	Connector (90°)	1
29.	1"PT(F)1 1/4"PT(M)	Bushing	1
30.	3/4"PT*580L(Slope)	Zine-Plate Pipe	1

HYDRAULIC PUMP UNIT ASS'Y
(2040,2060AH)

Index No.	Parts No.	Parts Name	Q'ty
31.	SS-2060-1-2	Asbestos Packing	1
32.	EM-375	Hang Bar	4
33.	NP-2060-1	Name Plate	1
34.	φ2*6L	Rivet	4
35.	1/2"PT	PT Plug	1
36.	1/2"PT	Socket	1
37.	1/4"PT	PT Plug	1
38.	3/4"PT	Plastic Plug	2
39.	3/4"PT	PT Plug	2
40.	M6*65L	Socket Head Cap Screw	2
41.	1/4"PT(F)*1/4PT"(M)	Connector (90°)	1
42.	M16*50L	Socket Head Cap Screw	4
43.	3/4"PT*3/4"PT	Connector (90°)	1
44.	3/4"PT* φ22mm	LE Connector	1
45.	3/4"PT*3/4"PS	Connector (90°)	1
46.	φ22mm*2.0t	OST2 Pipe	1
47.	3/4"PT* φ22mm	LE Connector (90°)	1
48.	3/4"PT*3/4"PT	Socket	1
49.	3/4PT"	Zine-Plate Pipe	1
50.	M5*12L	Round Head Screw	4
51.	M5*12L	Round Head Screw	4
52.	CC-2060-1-1	Cover Of Cooler	1
53.	3/4"PT(F)*3/4"PT(M)	Connector (90°)	1
54.	ST-06	Dust Rubber	1
55.	3/4"PS*3/4"PS*620L	High Pressure	1
56.	3/4"PT*3/4"PS	Connector (90°)	1

2040,2060AHD HYDRAULIC PUMP UNIT ASS'Y

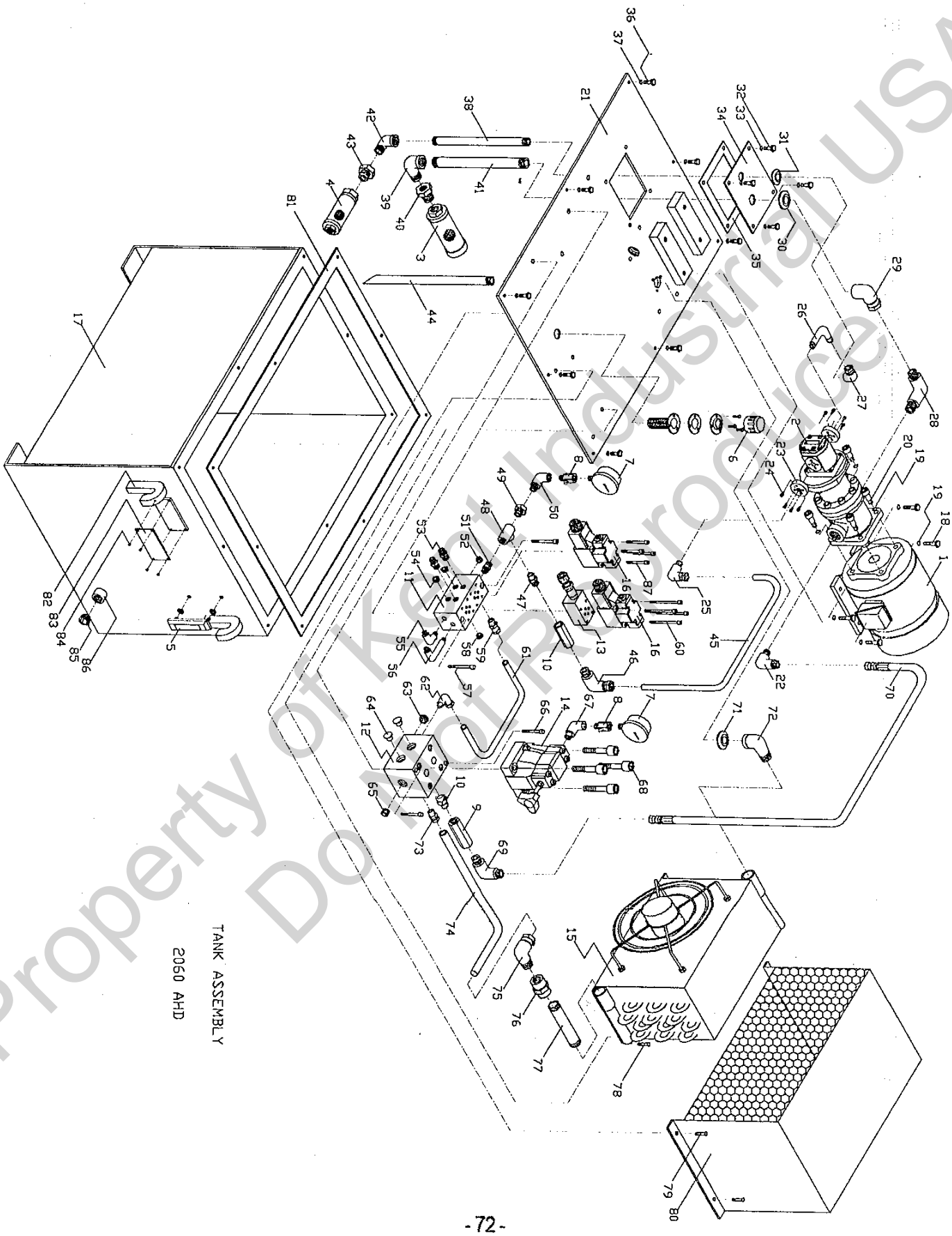

HYDRAULIC PUMP UNIT ASS'Y
(2040,2060AHD)

Index No.	Parts No.	Parts Name	Q'ty
1.	5HP*4P	Motor	1
2.	VPNCG-F30/4.3-20	Pump	1
3.	SS-1.25-100	Oil Filter	1
4.	PS-06	Oil Filter	1
5.	KS-5"	Oil Level Indicator	1
6.	AB-1163	Cover Of Oil Fill Filter	1
7.	2 1/2"*70KG	Pressure Gauge	2
8.	1/4"	Gauge Cock	2
9.	CIT-06-05-10	Check Valve	1
10.	CIT-03-05-10	Check Valve	1
11.	M02 -2E	Manifold Board	1
12.	EM-370A	Manifold Board	1
13.	MRF-02P-0-K	Modular Relief Valve	1
14.	HRF-G06-1-10	Relief	1
15.	EM268	Oil Cooler	1
16.	SWH-G02-B2S-A110-10	Solenoid	2
17.	910*650*450	Oil Tank	1
18.	M10*30L	Hexagonal Head Screw	4
19.	SWM10	Spring Washer	8
20.	M10*30L	Socket Head Cap Screw	4
21.	CT-2060-2-1	Cover Of Tank	1
22.	3/4"PT*3/4"PS	Connector (90°)	1
23.	TEP4.3	Flange	2
24.	M5*20L	Socket Head Cap Screw	8
25.	3/8"PT* φ 12mm	LE Connector	1
26.	3/8"PT*1/2"PS	Connector (90°)	1
27.	1/2"PT(F)*1/2"PS(M)	Universal Connector (90°)	1
28.	1"PT*1"PS	Connector (90°)	1
29.	1"PT(F)*1"PS(M)	Universal Connector (90°)	1
30.	ST-08	Dust Rubber	1

HYDRAULIC PUMP UNIT ASS'Y
(2040,2060AHD)

Index No.	Parts No.	Parts Name	Q'ty
31.	ST-04	Dust Rubber	1
32.	M8*20L	Hexagonal Head Screw	4
33.	SWM8	Spring Washer	4
34.	CP-2060-2-1	Cover	1
35.	SS-2060-2-1	Asbestos Packing	1
36.	M8*20L	Hexagonal Head Screw	8
37.	SW-M8	Spring Washer	8
38.	1/2"PT	Zine-Plate Pipe	1
39.	1"PT(F)*1"PT(M)	Connector(90°)	1
40.	1"PT(F)*1 1/4"PT(M)	Bushing	1
41.	1/2"PT	Zine-Plate Pipe	1
42.	1/2"PT(F)*1/2"PT(M)	Connector(90°)	1
43.	1/2"PT(F)*3/4PT"(M)	Bushing	1
44.	3/4"PT*580L(Slope Cut)	Zine-Plate Pipe	1
45.	φ 15mm*2.0t	OST2 Pipe	1
46.	3/8"PT* φ 12mm	LE Connector (90°)	1
47.	3/8"PT*3/8"PT	Connector (90°)	1
48.	3/8"PT(M)	Connector (3 ways)	1
49.	1/4"PT*3/8"PT	Bushing	1
50.	1/4"PT(F)*1/4PT"(M)	Connector(90°)	1
51.	3/8"PT*3/8"PT	Connector	1
52.	3/8"PT	Plastic Plug	1
53.	3/8"PT*1/4PS"	Connector	2
54.	3/8"PT	PT Plug	2
55.	3/8"PT*1/4PS"	Connector (90°)	1
56.	3/8"PT*1/4PS"(L)	Connector(90°)	1
57.	M8*60L	Socket	2
58.	3/8"PT	PT Plug	1
59.	3/8"PT* φ 12mm	LE Connector (90°)	1
60.	M5*85L	Socket Head Cap Screw	4

HYDRAULIC PUMP UNIT ASS'Y
(2040,2060AHD)

Index No.	Parts No.	Parts Name	Q'ty
61.	φ 12mm*2.0t	OST2 Pipe	1
62.	3/8"PT* φ 12mm	LE Connector(90°)	1
63.	3/4"PT	PT	1
64.	3/4"PT	Plastic Plug	2
65.	3/4"PT	PT Plug	1
66.	M6*65L	Socket Head Cap Screw	2
67.	1/4"PT(F)*1/4"PT(M)	Connector (90°)	1
68.	M16*50L	Socket Head Cap Screw	4
69.	3/4"PT*3/4"PS	Connector (90°)	1
70.	3/4"PS*3/4"PS*620L	High Pressure Tube	1
71.	ST-06	Dust Rubber	1
72.	3/4"PT(F)*3/4"PT(M)	Connector (90°)	1
73.	3/4"PT* φ 22	LE Connector (90°)	1
74.	φ 12mm*2.0t	OST2 Pipe	1
75.	3/4"PT* φ 22	LE Connector (90°)	1
76.	3/4"PT*3/4"PT	Socket Head Cap Screw	1
77.	3/4"PT	Zine-Plate Pipe	1
78.	M5*12L	Screw	4
79.	M5*12L	Screw	4
80.	CC-2060-2-1	Cover of Cooler	1
81.	SS-2060-2-2	Asbestos Packing	1
82.	EM-375	Hang Bar	4
83.	NP-2060-2-1	Name Plate	1
84.	φ 2*6L	Rivet	4
85.	1/2"PT	PT Plug	1
86.	1/2"PT	Socket	1
87.	M5*45L	Socket Head Cap Screw	4

2040,2060 SERIES PARALLEL DRESSER ASS'Y

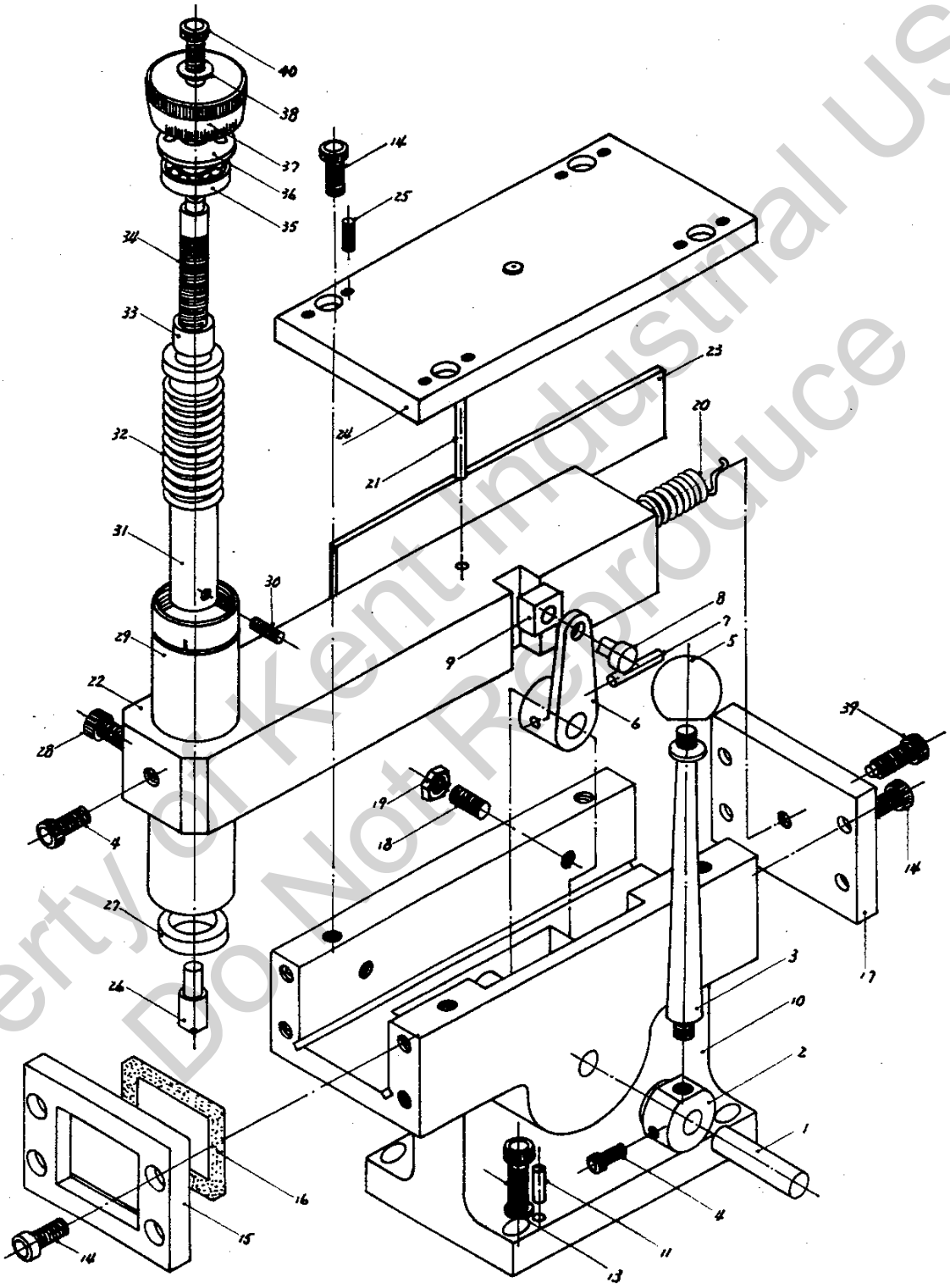

PARALLEL DRESSER ASS'Y

(2040,2060SERIES)

Index No.	Parts No.	Parts Name	Q'ty
1.	2040-737	Shaft	1
2.	1020-738	Transmission Cap	1
3.	2040-739	Transmission Lever	1
4.	W 5/16"*1/2"L	Socket Head Cap Screw	2
5.	1020-740	Cap	1
6.	1020-741	Transmission Arm	1
7.	W 1/4"*3/8"L	Socket Head Cap Screw	1
8.	1020-742	Shaft	1
9.	1020-743	Slipper	1
10.	2040-730	Dresser Body	1
11.	W 1/4"*5/8"L	Set Screw	4
12.	W 5/16"*1"L	Socket Head Cap Screw	4
13.	W 5/16"	Spring Washer	4
14.	W 1/4"*1/2"L	Socket Head Cap Screw	13
15.	2040-733	Front Cover	1
16.	2040-735	Oil Immersed Pad	1
17.	2040-734	Rear Cover	1
18.	W 1/4"*1"L	Set Screw	3
19.	W 1/4"	Hexagonal Nut	3
20.	2040-744	Spring	1
21.	W 1/4"*1 1/2"L	Set Screw	1
22.	2040-731	Moving Body	1
23.	2040-736	Adjusting Plate	1
24.	2040-732	Top Cover	1
25.	W 3/16"*1/2"L	Set Screw	4
26.	2040-745	Diamond Cutter	1
27.	RE-20	U-Packing	1
28.	W 1/4"*1/2"L	Socket Head Cap Screw	1
29.	1020-746	Out-Holder	1
30.	W 3/16"*3/8"L	Socket Head Cap Screw	1
31.	1020-748	Moving Muff	1
32.	1020-749	Spring	1
33.	1020-750	Nut	1
34.	1020-751	Transmission Rod	1
35.	B6200Z	Bearing	1
36.	1020-752	Nut	1
37.	1020-753	Graduation Dial	1
38.	W 1/4"	Spring Washer	1
39.	W 1/4"*1/2"L	Socket Head Cap Screw	1