9″ × 16″

HORIZONTAL BAND SAW

Study Carefully Before Operating

SPECIFICATIONS

Speeds:	60HZ 82, 132, 170, 235FPM 50HZ 68, 110, 142, 196FPM	Blade:	1″ × 0.032″ × 119 1/2″ (27MM × 0.9MM × 3035MM)
Motor:	60HZ 1 1/2HP 1725RPM 1PHASE 50HZ 1 1/2HP 1430RPM 3PHASE	Dimension:	L67″ × W30″
Capacity:	90° ● 9″ ■ 9″ × 13 1/2″ ■ 1 1/2″ × 16″ 45° ● 6 1/2″ ▮ 9″ × 6 1/2″	Blade Wheels:	13″ (330MM) Diameter
		Shipping Weight:	625LBS (285KGS)

11/2014

General Safety Information

1. Read the Instruction manual before operating the machine.
2. If you are not thoroughly familiar with the operation of horizontal band saws, obtain advice from your supervisor, instructor or other qualified person.
3. Remove tie, rings, watch and other jewelry, and roll up sleeves.
4. Always wear safety glasses or a face shield.
5. Make sure wiring codes and recommended electrical connection instructions are followed and that machine is properly grounded.
6. Make all adjustments with the power cut-off.
7. Adjust and position the blade guide before start cutting.
8. Make sure that blade tension is properly adjusted before start cutting.
9. Stop the saw before putting a workpiece in the vise.
10. Always keep hands and fingers away from the blade when the machine is running.
11. Stop the machine before removing chips.
12. Always have stock firmly clamped in vise, before start cutting.
13. Disconnect machine from power source when making repairs.
14. Before leaving the machine, make sure the work area is clean.

Operating Instructions

1. Check Coolant: Low coolant level causes foaming and high blade temperatures. Dirty or weak coolant can clog pump, causes crooked cuts, low cutting rate and permanent blade failure. Dirty coolant causes the growth of bacteria with ensuing skin irritation.
2. Keep vise slides clean and oiled.
3. Clean chips from blade wheels and the areas around wheels.
4. Saw Guide: Keep saw guides properly adjusted. Loose guides will affect cutting accuracy.
5. Saw Blade: Is saw blade sharp?
6. Blade Speed: Is blade speed set correctly for workpiece material and shape?
7. Check Blade Tension: Particularly after initial cuts with a new blade.

Blade Selection

A. Never use a blade so coarse that less than 3 teeth are engaged in the workpiece at any time. (Too few teeth will cause teeth to strip out.)

B. Never use a blade finer than required to obtain a satisfactory surface finish or satisfactory flatness. (Too many teeth engaged in the workpiece will prevent attainment of a satisfactory sawing rate; frequently cause premature blade wear; frequently produce "dished" cuts or the cuts are neither square nor parallel.)

C. The chart which follows is not expected to be exactly correct for all cases. It is intended as a general guide to good sawing practices. Your blade supplier or the qualified engineers should be your most reliable source of correct information for operational details of saw blades and their use.

THE SELECTION OF SAWBLADES

Cutting Material	○	⊢⊣	● ■	● ■	● ■	● ■
	<3mm	>5mm	>50mm	>100mm	>150mm	>200mm
Sawblade	<0.12"	>0.2"	>2"	>4"	>6"	>8"
(HSS) 14T	●					
(HSS) 6/10T		●				
(HSS) 5/8T			●			
(HSS) 4/6T			●	●		
(HSS) 3/4T				●		
(HSS) 2/3T					●	●
(HSS) 1/2T						●
(HCS) 10T	●					
(HCS) 8T		●				
(HCS) 6T			●			
(HCS) 4T				●		
(HCS) 2T					●	●

Remarks: HSS-High Speed Steel Sawblade
HCS-High Carbon Steel Sawblade

NOTE:

1. When standard wall pipe, tubes, channel iron and angles I beams are cut, a 10 pitch saw blade of wave-set type or sawblade of (HSS) 6/10T is frequently used to good advantage.
2. Tubes or structure with wall thickness or web thickness of 1/2" or more can usually use an 8 or 6 pitch blade or sawblade of (HSS) 4/6T satisfactorily.
3. When rectangular solid bar is to be sawed, the work should, whenever possible, be loaded with the thinnest cross section exposed to the blade teeth. The pitch (or number of teeth per inch of blade) selected must provide engagement of at least 3 teeth in the workpiece. Should application of this rule not be possible because the thinnest cross section is too thin, the piece must be loaded with the wider dimension exposed to the saw teeth and a coarser blade selected from the listing of recommendations for round and square solid bars.

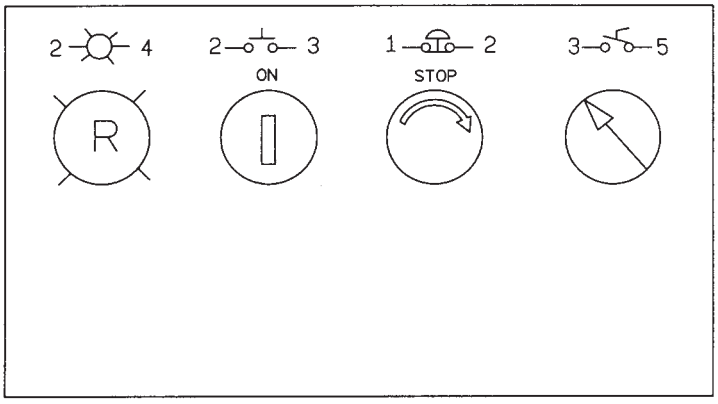

SUITABLE FOR THE AREAS IN U.S.A. & CANADA

1PH
Electrical Schematic for the UE-916 (115V/230V Rewired 110V)

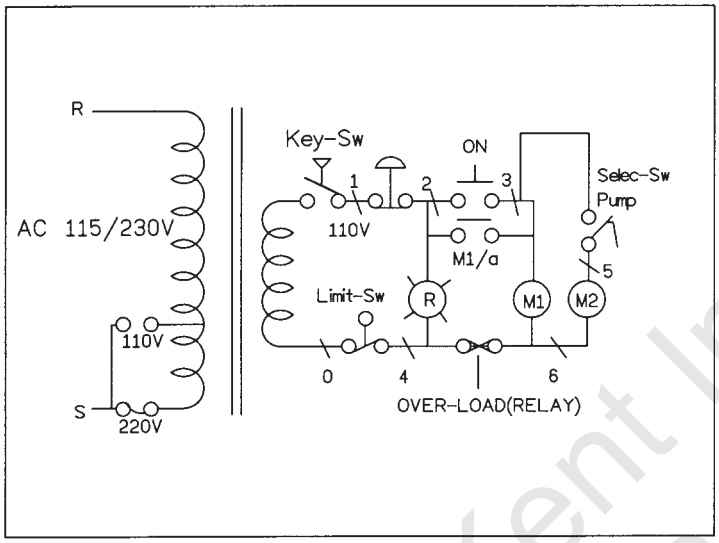

CHANGE STEP:

① CHANGE 115V PLUG TO 230V PLUG

② CHANGE FUSE AT THE CONTROL BOX FROM 115V TO 230V

③ REWIRING MAIN MOTOR WIRING BOX AS Fig.4

④ REWIRING PUMP MOTOR WIRING BOX AS Fig.5

Fig.4

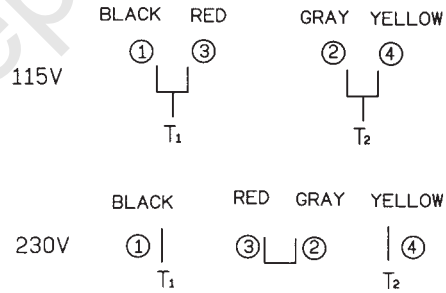

Electrical Panel Layout

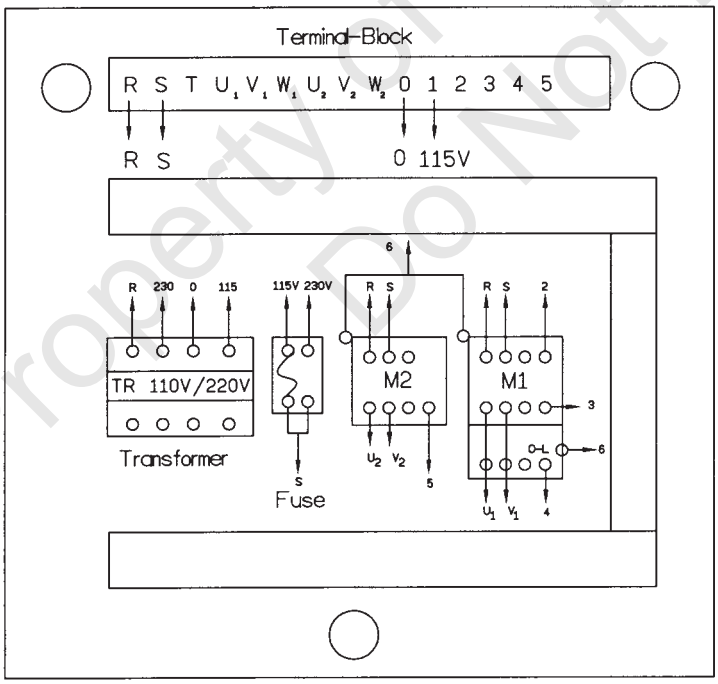

Fig.5

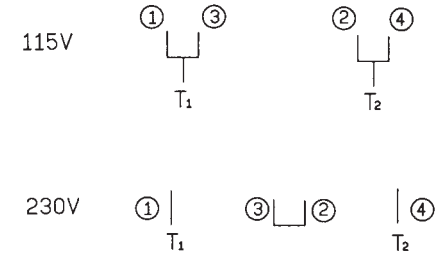

M1:MAIN-MOTOR (CONTACT-RELAY)

M2:COOLANT-PUMP (CONTACT-REALY)

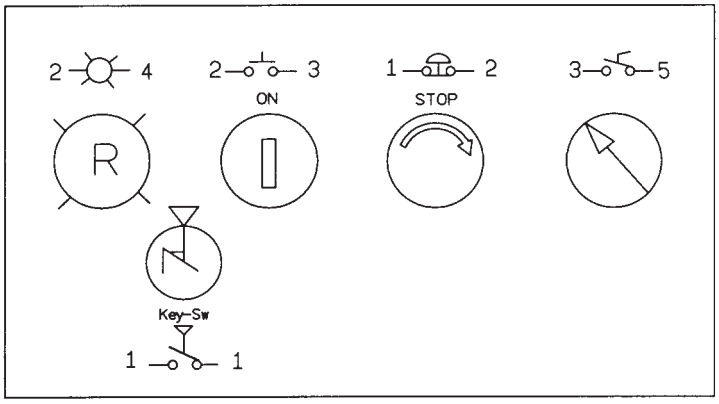

3PH
Electrical Schematic for the UE-916 (220V/440V & 575V)

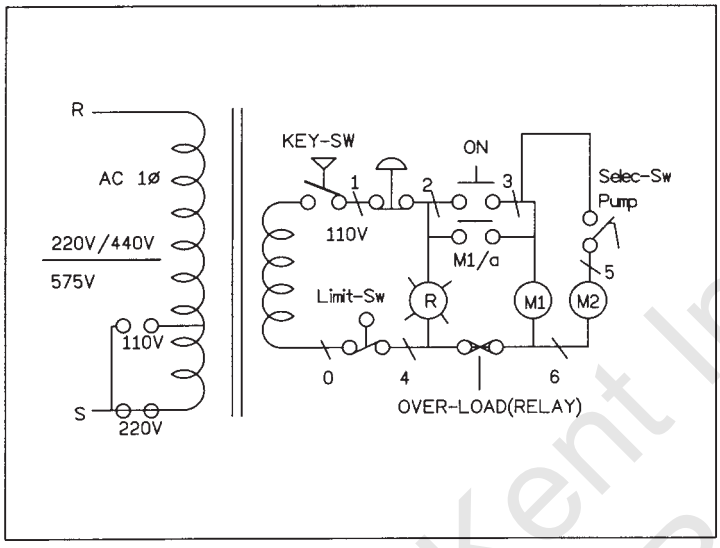

Electrical Panel Layout

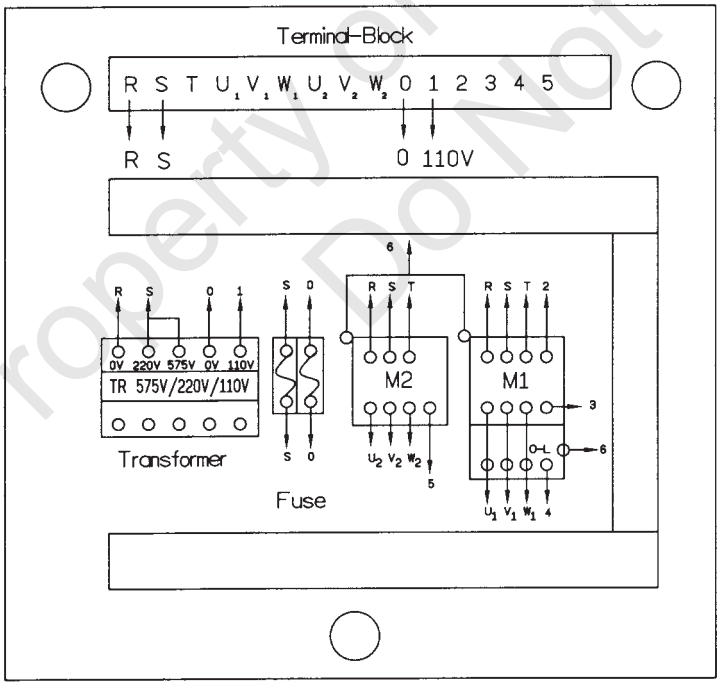

SUITABLE FOR THE AREA IN CANADA & U.S.A.

IF YOU WANT TO CHANGE VOLTAGE, PLEASE ACCORDING THE FOLLOWING DRAWING TO CHANGE.

Fig.4 3 PHASE (MOTOR) CONNECTION

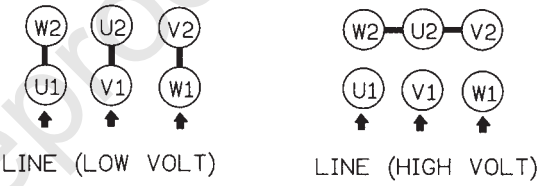

Fig.5 3 PHASE (PUMP) CONNECTION

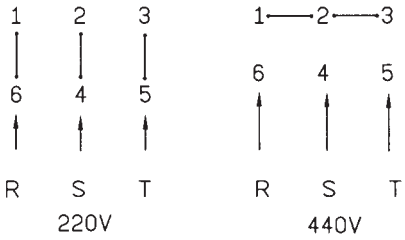

M1:MAIN-MOTOR (CONTACT-RELAY)
M2:COOLANT-PUMP (CONTACT-REALY)

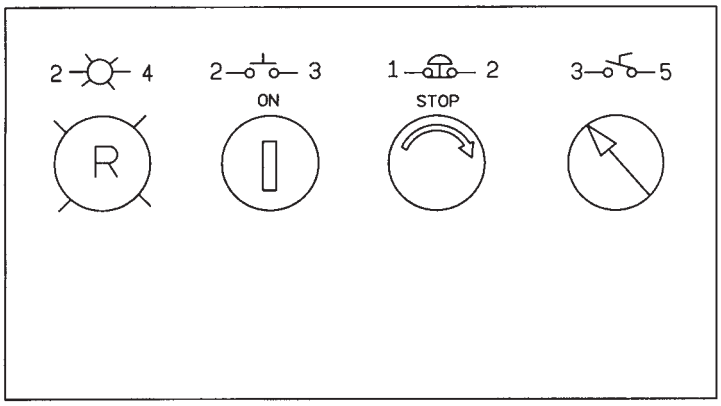

SUITABLE FOR THE AREAS IN AUSTRALIA, SOUTH AFRICA, SOUTH EAST ASIA AND EAST EUROPE.

3PH
Electrical Schematic for the UE-916 (440V/220V)

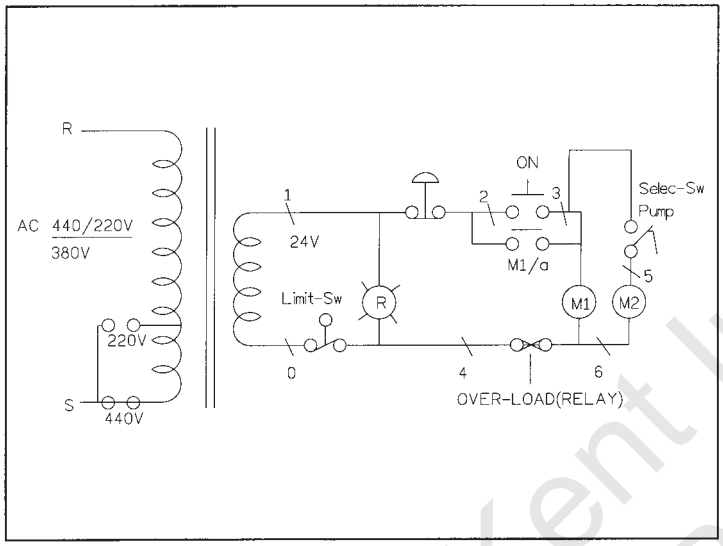

IF YOU WANT TO CHANGE VOLTAGE, PLEASE ACCORDING THE FOLLOWING DRAWING TO CHANGE.

Fig.4 3 PHASE (MOTOR) CONNECTION

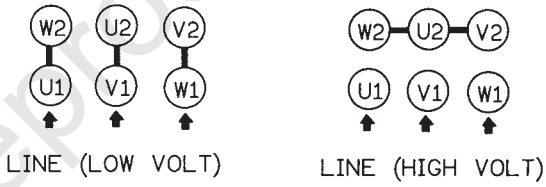

Electrical Panel Layout

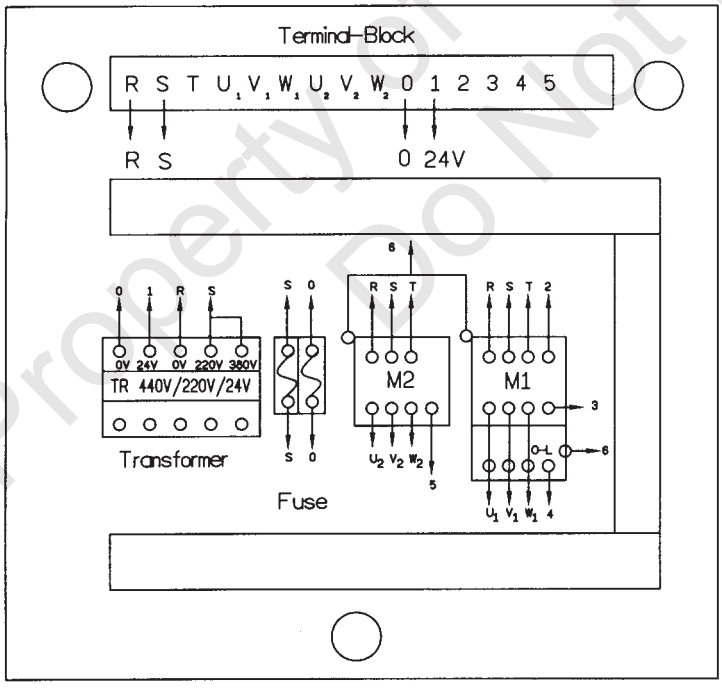

Fig.5 3 PHASE (PUMP) CONNECTION

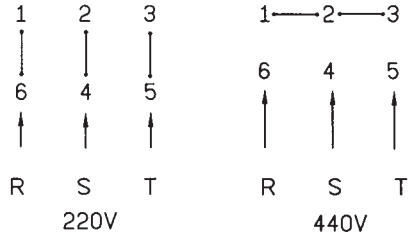

M1:MAIN-MOTOR (CONTACT-RELAY)
M2:COOLANT-PUMP (CONTACT-REALY)

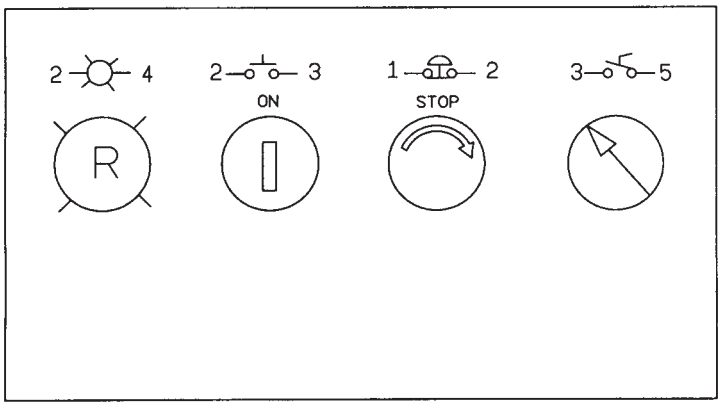

SUITABLE FOR THE AREAS IN U.S.A. & CENTRAL/SOUTH AMERICA.

3PH
Electrical Schematic for the UE-916 (440V/220V)

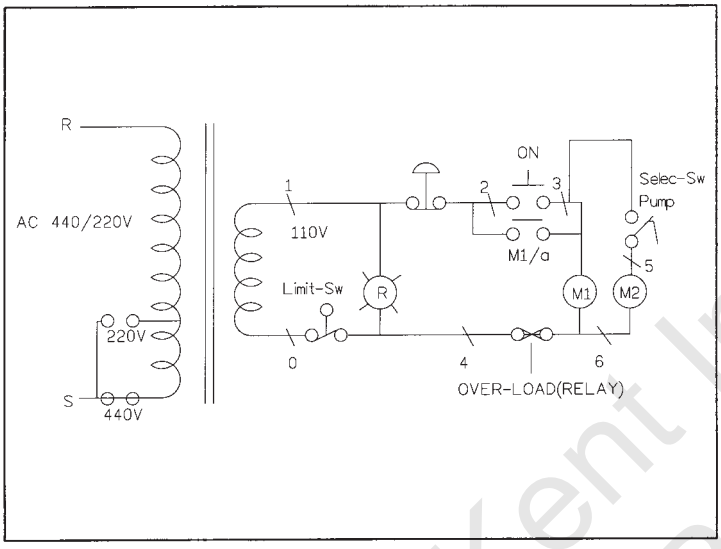

IF YOU WANT TO CHANGE VOLTAGE, PLEASE ACCORDING THE FOLLOWING DRAWING TO CHANGE.

Fig.4 3 PHASE (MOTOR) CONNECTION

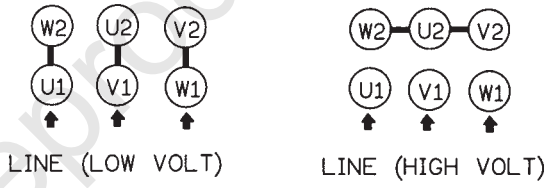

Electrical Panel Layout

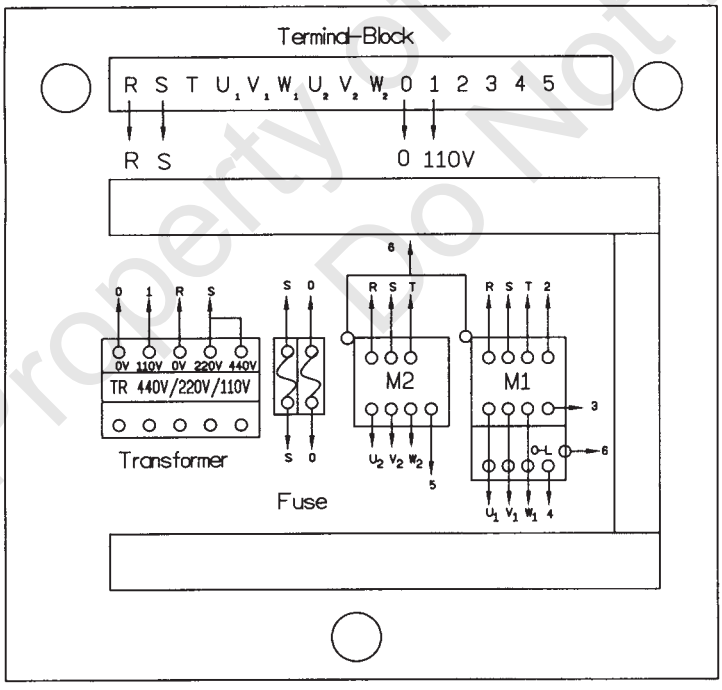

Fig.5 3 PHASE (PUMP) CONNECTION

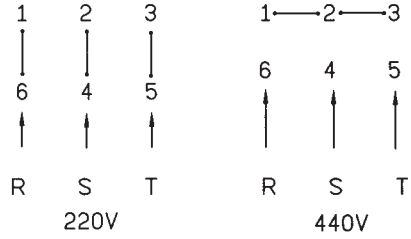

M1:MAIN-MOTOR (CONTACT-RELAY)
M2:COOLANT-PUMP (CONTACT-REALY)

Single Phase

Refer to the wire drawing inside the electrical box and above for proper motor and transformer connections, lead selection and wiring connections from the motor to the power source for the voltage you are using. Important: Immediately after wiring the machine, remove the drive belt, turn on the power and make sure the motor is running in the right direction (counter-clockwise when looking at the motor shaft.)

Three Phase

Refer to the wire drawing inside the electrical box and above for proper motor and transformer connections, lead selection and wiring connections from the motor to the power source for the voltage you are using. Important: Immediately after wiring the machine, remove the drive belt, turn on the power and make sure the motor is running in the right direction (counter-clockwise when looking at the motor shaft.) If it is not, disconnect the machine from the power source and interchange any two lead lines.

General Operating Instructions

Removing and Installing the Blade

When your machine was shipped, a blade was supplied and assembled to the saw. When selecting a new blade refer to the selection of sawblades. The machine requires a blade 1"×0.032"×119$^1/_2$". (27MM×0.9MM×3035MM)

1. Disconnect the machine from the power source.
2. Raise the saw frame about 6" and close the feed control valve by turning it clockwise as far as it will go. (Do Not Overtighten.)
3. Open both wheel covers and clean the chips out of the machine.
4. Release blade tension by turning the blade tension handwheel (C) Fig.1 counter-clockwise.
5. Slide left blade guide arm to the right as far as possible.
6. Remove the blade from both wheels and out of each blade guide.
7. Make sure the teeth of the new blade are pointing in the direction of travel. If necessary, turn the blade inside out.

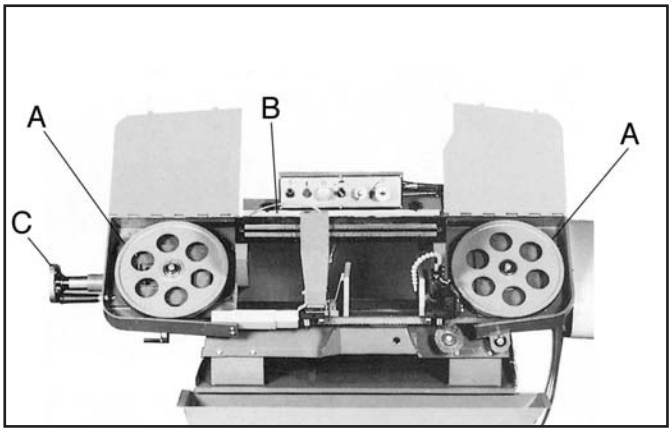

Fig. 1

8. Place the blade in place on the wheels (A) and through the upper blade guard. (B) Fig.1.

9. Work the blade all the way up between the blade guide bearings with the back of the blade against the back-up bearing, as shown in Fig.2.

   Note: If bearings need adjustment, refer to the section adjusting blade guide roller bearings.

10. Put light tension on the blade and work it on both wheels, as shown in Fig.3. Make sure that the back of the blade is against the wheel flanges of both wheels. This is very important.

11. When you are sure the back of the blade is against the wheel flanges of both wheels and properly inserted into the guides, finish putting tension on the blade.

    Proper tension is achieved when the pointer is on the left mark of the blade tension scale behind the driven wheel.

12. Jog the power "on" and "off" to be sure the blade is in place and tracking properly. If blade is not tracking properly refer to the section tracking the blade.

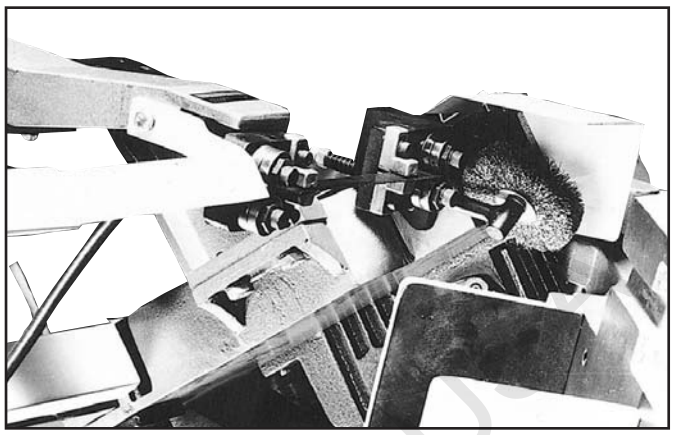

Fig. 2

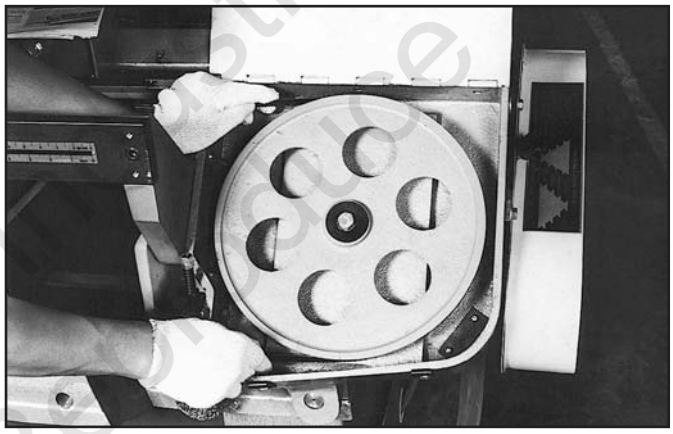

Fig. 3

Starting and Stopping the Machine

The saw frame must be in the raised position before starting the machine. The machine is started by pushing the start button (A) Fig.4, and will continue to run until the saw frame is in the down position at the end of the cut, or when the stop button (B) is pushed. Pushing the stop button (B) will stop the motor at any time.

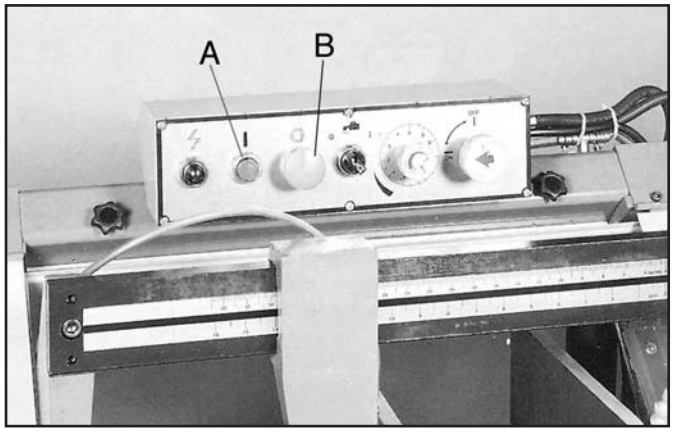

Fig. 4

Blade Tracking Adjustment

Blade tracking has been set at the factory and should require no adjustment. If a tracking problem occurs, adjust the machine as follows:

Since tracking can only be adjusted while machine is running, it is suggested that this adjustment be accomplished by qualified personnel that are familiar with this type of adjustment and the dangers associated with it.

1. Disconnect machine from the power source.

2. Raise saw arm to its highest position and close cutting pressure control valve to hold saw arm in place.

3. Locate tracking adjustment plate on the back side of the driven blade wheel.

4. Loosen the three bolts (A - Fig.5) located on the top of the tracking nuts.

5. Tracking adjustment is accomplished by either loosening or tightening three adjusting nuts (B - Fig.5).

6. Tracking is set properly when the back of the blade lightly touches the wheel flange. **Note:** over-tracking (allowing blade back to rub hard against wheel flange) will damage the blade wheels and blade.

7. Tighten locking bolts (A) once properly tracking is completed.

8. Connect machine to the power source.

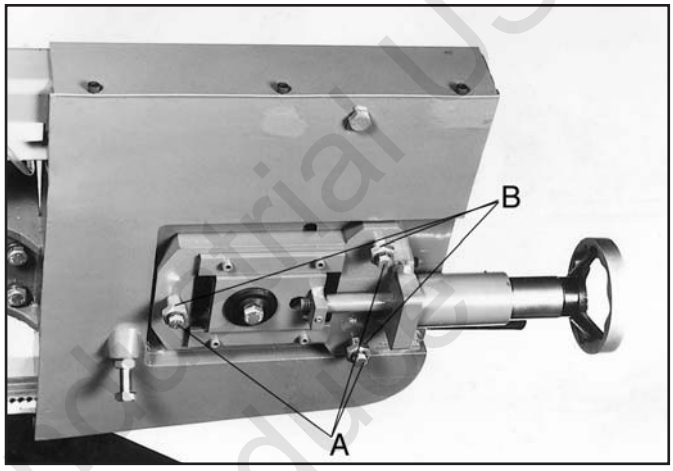

Fig. 5

Adjusting Feed Rate

When the oil regulating micro switch (A) Fig.6 is turned clockwise as far as it will go, the saw frame will not move down. By turning the feed control valve counter-clockwise, you regulate the flow of oil from the cylinder and determine the speed at which the saw frame will lower and the blade will feed through the work. Too many factors are involved to make tabulated data practical on feed rates. As a general rule, an even pressure without forcing the blade gives best results. Avoid forcing the blade at the start as this may shorten blade life and produce a bad cut. By inspecting the chips while the cut is being made will indicate whether the feed rate is correct. Fine powdery chips indicate a feed rate which is too light. The teeth are rubbing over the surface instead of cutting. Burned chips indicate excessive feed which causes the teeth to break off as the blade overheats. The ideal feed rate is indicated by chips that have a free curl and this will give the fastest cutting time and longest blade life.

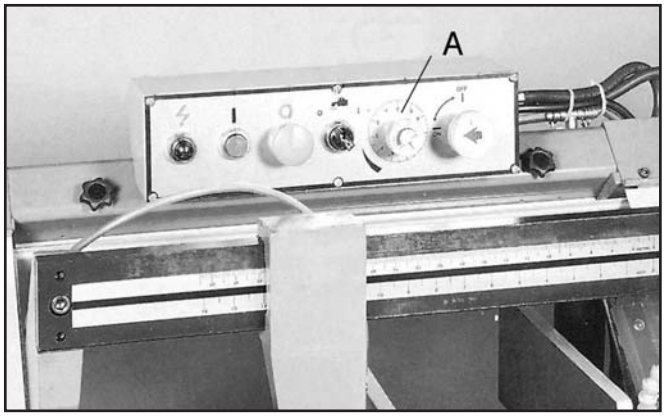

Fig. 6

Adjusting Blade Guide Brackets

The blade guides should be set as close to the vise jaws as possible. The right blade guide bracket, is not adjustable and is set at the factory to clear the right hand vise jaw. The left blade guide bracket can be moved to the left or right depending on the position of the left hand vise jaw. To move the left blade guide bracket (A) Fig.7, loosen the hand knob (B), position blade guide bracket and tighten hand knob (B).

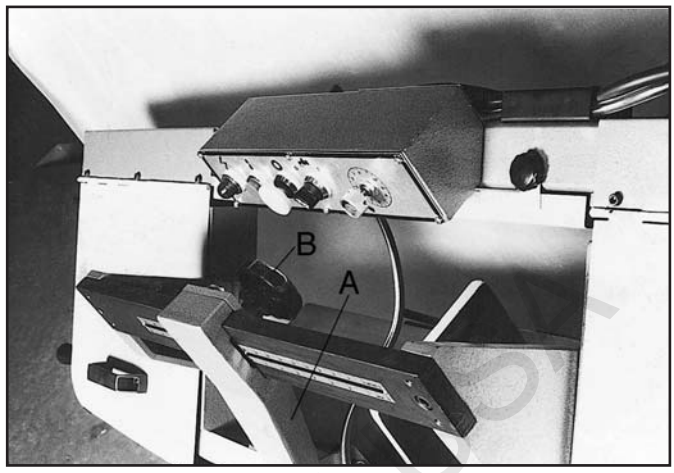

Fig. 7

Automatic Shut-Off Adjustment

The motor should shut off immediately after the blade has cut through the material and just before the head comes to rest on the horizontal stop bolt. If the machine continues to run after the workpiece has been fully cut, locate and adjust the micro switch mounting plate down. If the machine shuts off before the workpiece has been completely cut, move the micro switch mounting plate up.

Thrust Roller Adjustment

1. Disconnect machine from the power source.
2. Loosen two hex socket cap screws (A-Fig.8).
3. Move guide seat (B – Fig.8) up or down until a clearance of 0.003" to 0.005" between back of blade and thrust roller is obtained.
4. Tighten two hex socket cap screws (A – Fig.8).
5. Repeat for other blade guide assembly.
6. Connect machine to power source.

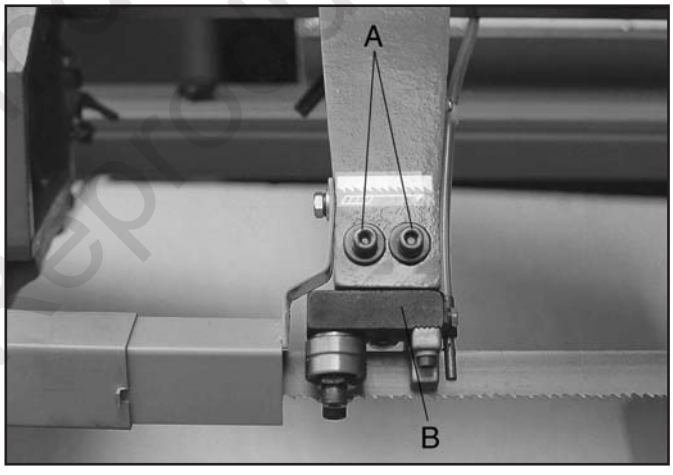

Fig. 8

Guide Roller Adjustment

1. Disconnect machine from the power source.
2. Loosen blade guides (A – Fig.9) by loosening screws (B). Slide blade guides away from blade.
3. Loosen locking screws (C) by using a hex wrench.
4. Adjust the eccentric bushings with a combination wrench until the ball bearings are snug to the blade. Note: blade should travel freely up and down between the ball bearings. Do not pinch the blade.
5. Tighten locking screws (C).
6. Slide blade guides back into contact with blade and tighten screws (B).
7. Connect machine to the power source.

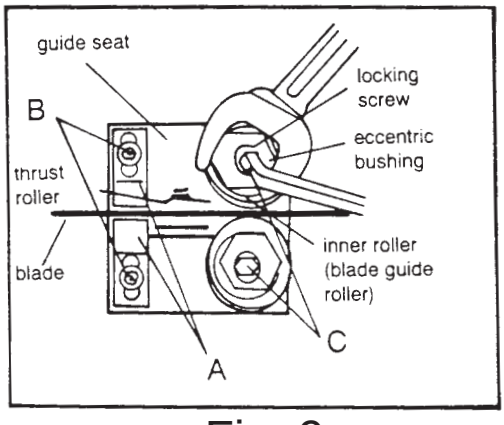

Fig. 9

Vise Adjustment

To position the moveable vise jaw:

1. Turn vise handwheel (A – Fig.10) 1/2 turn counter-clockwise.

2. Move rack block (B – Fig.10) to desired location by sliding along the bed. Place the rack block onto the rack.

3. Turn the handwheel to tighten the vise.

To adjust the vise for angle cutting:

1. Loosen bolts and move vise jaw (C – Fig.10) to desired location.

2. Set the vise to desired angle, reinstall nuts and tighten the nut and bolt assemblies.

3. Adjust the movable vise parallel to the fixed vise by loosening bolt (D – Fig.10) adjusting to parallel and tightening bolt.

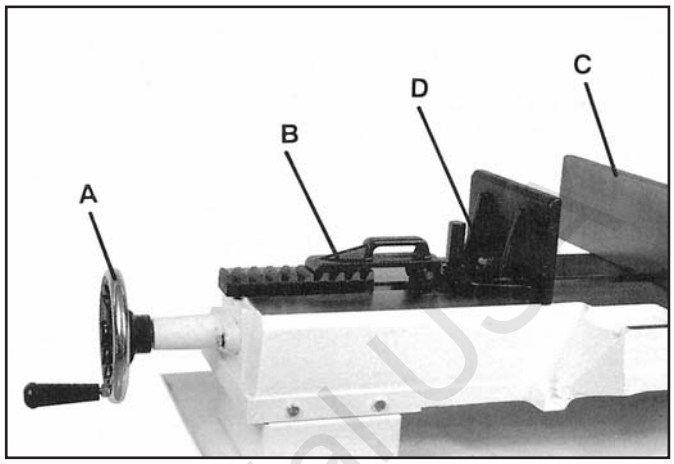

Fig. 10

Setting Up the Machine for Operation

1. Select the proper speed and blade for the type of material you are going to cut.

2. Make sure blade tension is adjusted properly.

3. Lift the saw frame up and turn off the oil regulating micro switch.

4. Place the stock between the vise jaws, set the stock for the desired width of cut and tighten the vise.

5. Make sure the left blade guide bracket (A) is adjusted as close as possible to the left vise jaw (B) Fig.11.

6. Turn the oil regulating micro switch (C) Fig.11, counter-clockwise until the saw blade begins to lower by the desired rate.

7. Proceed to cut through the workpiece, as shown in Fig.11. The machine will shut off upon completion of cut.

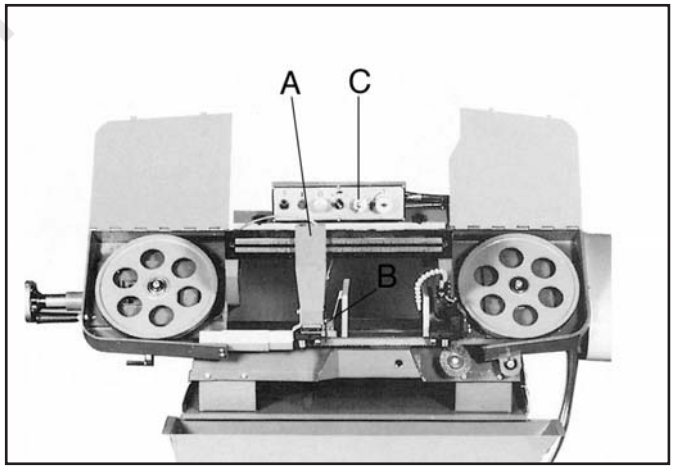

Fig. 11

Changing Speeds

For 916A

Your machine is provided with four speeds. To change speeds, proceed as follows:

1. Disconnect the machine from the power source.

2. Loosen wing nut (A), Fig.12 and lift up and swing belt and pulley guard (B) to the side of the machine.

3. Release tension on the belt by turning the tension lock knob counter-clockwise and letting the motor swing forward.

4. Shift the belt Fig.12, to the desired grooves on the pulleys and adjust belt tension by pulling the motor plate back until correct belt tension is obtained and tighten tension lock knob.

5. Close belt and pulley guard.

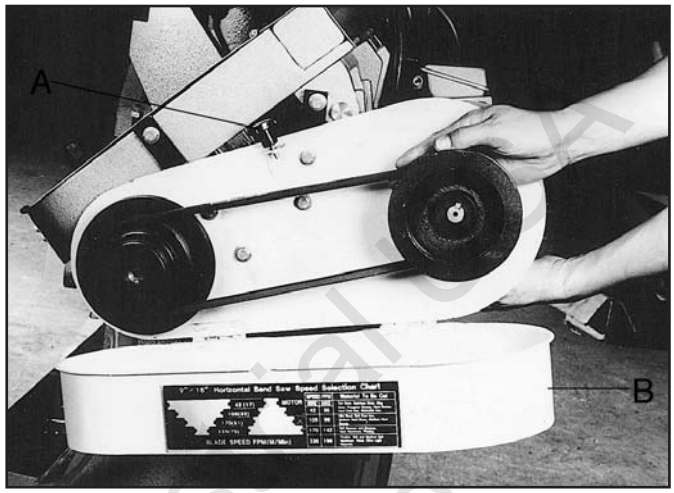

Fig. 12

For 916V

Your machine is provided with variable speed equipment, the ranges are 67-212FPM for 50HZ and 82-259 for 60HZ.

1. While your machine is running, speed can be adjusted.

2. Turn handle knob (A) Fig.13 clockwise to increase the speed.

3. Turn hand knob counter-clockwise to decrease the speed.

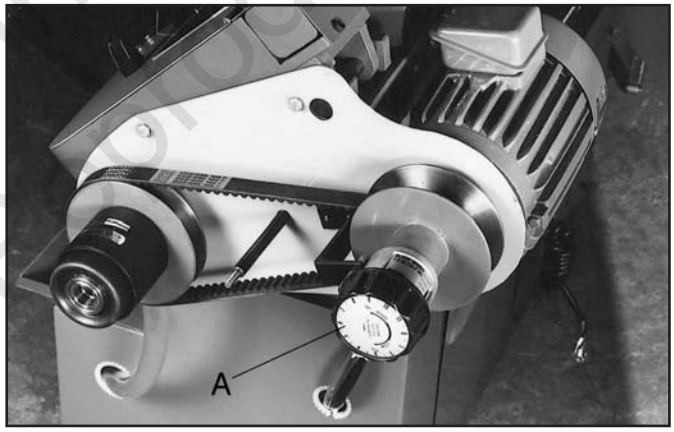

Fig. 13

Gear Case

After the first 50 hours of use the gear box should be drained and refilled. Remove drain plug Fig.14, drain all of the oil out of the gear box and replace plug. Remove oil filler plug located underneath the right blade wheel and fill the gear box with $1^1/_2$ pints of MOBIL CYL. OIL # 600W or equivalent.

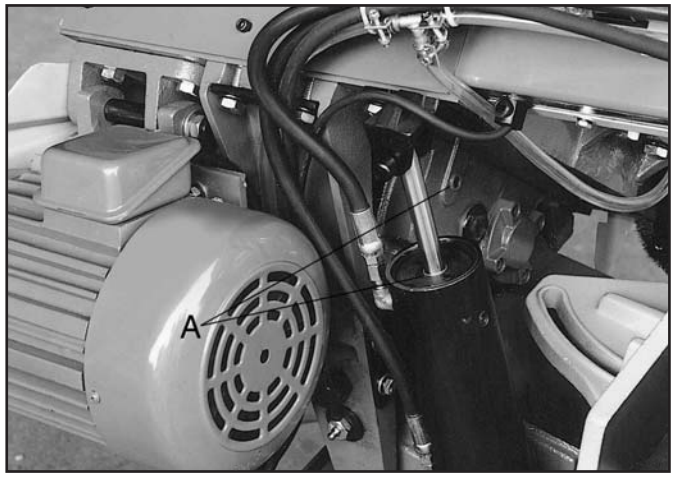

Fig. 14

PART LIST

Part No.	Description	Size No.	Q'ty	Part No.	Description	Size No.	Q'ty
1	Base		1	32-3	Grease Nipple	1/16	2
1-1	Strain Relief Fitting		1	33	Pivot Bracket		1
1-2	Power Cord		1	33-1	Set Screw	M10x12	1
1-3	Hex. Cap Bolt	M12x65	4	34	Nut	M12	1
1-4	Nut	M12	4	35	Washer	M12	1
2	Hose	1"x50MM	1	36	Hex. Cap Bolt	M12x40	1
2-1	Drain Plug	3/8 PT	1	37	Torsion Spring Shaft		1
3	Hose Clamp	35MM	2	38	C-Ring	S-22	1
4	Coolant Pump		1	39	Hex. Cap Bolt	M8x30	1
5	Big Round Head Screw	M6x16	2	39-1	Washer	M8	1
7	Hose	5/16"x1300MM	1	40	Motor Tilt Plate		1
7-1	Hose Clamp	14MM	4	40-1	Nut	M8	1
7-2	Hose Fitting	3/8PTx5/16H	1	41	Limit Switch Plate		1
8	Strain Relief		2	42	Washer	M8	2
9	Coolant Gauge		1	42-1	Lock Washer	M8	2
9-1	Hex. Cap Bolt	M10x30	2	43	Hex. Cap Bolt	M8x20	2
10	Chip Tray		1	44	Hex. Cap Bolt	M6x12	4
11	Bed		1	45	Limit Switch		1
11-1	Nut	M10	1	47	Cylinder Pin		1
11-2	Hex. Cap Bolt	M10x30	1	48	C-Ring	S-20	1
12	Hex. Cap Bolt	M8x30	8	49	C-Ring	S-25	2
13	Washer	M8	8	50	Hex. Cap Bolt	M12x40	1
14	Lock Washer	M8	8	51	Hydraulic Cylinder Assembly		1
15	Nut	M8	8	52	Cylinder Pin-Top		1
16	Work Stop Bracket		1	52-1	Pin		1
17	Work Stop Rod		1	53	Hydraulic Mounting Plate-Top		1
18	Lock Knob	3/8"x1 1/4	1	53-1	Lock Washer	M10	2
19	Work Stop		1	53-2	Hex. Cap Bolt	M10x30	2
20	Lock Handle		1	54	Hex. Cap Bolt	M12x50	2
21	Hand Wheel Assembly	5.5"	1	55	Washer	M12	2
21-1	Set Screw	5/16"x3/8	1	56	Lock Plate		1
22	Lead Screw Seat		1	57	Nut	1/2"	2
23	Hex. Cap Bolt	M8x30	2	58	Spring Bracket		1
23-1	Lock Washer	M8	2	58-1	Hex. Cap Bolt	M8x30	2
23-2	Washer	M8	2	58-2	Washer	M8	2
24-1	Lead Screw		1	58-3	Lock Washer	M8	2
24-2	Key	5x20	1	58-4	Nut	M8	2
25-1	Lead Screw Bracket		1	59	Spring Adjustable Rod	1/2"	1
25-2	Hex. Socket Cap Screw	M8x30	2	60	Spring		1
25-3	Lock Washer	M8	1	61	Angle Scale		1
26-1	Slide Bracket		1	61-1	Rivet		3
26-2	Set Screw	M6x8	1	62	Hex. Cap Bolt	M12x40	1
27-1	Rack		1	63	Washer	M12	1
28-1	Rack Block		1	63-1	Lock Washer	M12	2
29-1	Pin		1	64	Vise Jaw-Left		1
30	Closed Bearing	HK25 15	2	65	Hex. Cap Bolt	M12x50	1
30-1	Bushing		1	66	Washer	M12	1
31	Torsion Spring		1	66-1	Lock Washer	M12	2
32	Pivot Shaft		1	67	Vise Jaw-Right		1
32-1	Washer		2	68	Hex. Cap Bolt	M12x40	1
32-2	Hex. Cap Bolt	M12x20	2	69	Hex. Socket Cap Screw	M6x30	1

990505

PART LIST

Part No.	Description	Size No.	Q'ty	Part No.	Description	Size No.	Q'ty
69-1	Lock Washer	M6	1	106-1	Lock Washer	M12	6
69-2	Washer	M6	1	106-2	Nut	M12	6
70	Electrical Panel Cover		1	107	Hex. Cap Bolt	M8x25	1
70-1	Pin		2	108	Washer	M8	1
71	Fuse Block		2	108-1	Lock Washer	M8	1
72	Contactor (main motor)		1	109	Hex. Cap Bolt	M8x45	4
72-1	Contactor (pump)		1	109-1	Washer	M8	4
73	Transformer		1	110	Motor Mount Plate		1
74	Terminal Strip		1	111	Motor		1
75	Handle		2	112	Washer	M8	4
76	Big Round Head Screw	M6x16	4	112-1	Lock Washer	M8	4
77	Hex. Cap Bolt	M6x12	2	113	Nut	M8	4
77-1	Lock Washer	M6	2	114	Key	7MM	1
77-2	Washer	M6	2	116	Hex. Socket Cap Screw	M8x20	2
78	Wire Brush Guard		1	118	Ball Bearing	608ZZ	2
79	Blade Wheel Cover-Left		1	118-1	Lock Washer	M8	2
80	Blade Wheel Cover-Right		1	119	Hex. Cap Bolt	M12x20	2
81	Hex. Socket Cap Screw	M6x8	6	120	Washer	M12	2
82	Bushing		1	121	Ball Bearing	6205Z	3
83	Washer		1	122	Idler Wheel		1
84	Drive Wheel		1	123	Blade Guard		1
85	Blade	3035MM	1	123-1	Hex. Cap Bolt	M8x16	1
86	Hex. Cap Bolt	M12x20	1	123-2	Washer	M8	2
87	Round Head Screw	M5x10	2	123-3	Lock Washer	M8	1
88	Filter Screen		1	124	Guide Bracket-Left		1
89	Hex. Cap Bolt	M12x35	4	124-1	Set Screw	M8x16	3
89-1	Lock Washer	M12	4	124-2	Nozzle		1
90	Lock Knob	1/4"x10	4	124-3	Nozzle Support		1
92	Blade Wheel Box-Right		1	124-4	Lock Washer	M6	1
92-1	Set Screw	M10x12	2	124-5	Hex. Cap Bolt	M6x12	1
93	Connector		1	125	Washer	M8x25	4
94	Gear Box Assembly		1	126	Ball Bearing	6201LBZZ	8
94-1	Key	7MM	1	127	Eccentric Sleeve		2
95	Key	7MM	1	127-1	Centric Sleeve		2
96	Pulley Cover		1	128	Lock Washer	M8	4
96-1	Lock Knob	1/4"	1	129	Hex. Socket Cap Screw	M8x45	4
97	Gear Box Pulley		1	130	Hex. Socket Cap Screw	M6x30	4
98	Belt	A.39	1	130-1	Lock Washer		4
99	Motor Pulley		1	130-2	Washer		8
99-1	Set Screw	M8x10	1	131	Tungsten Carbide Blade Guide		4
100	Hex. Cap Bolt	M8x16	2	132	Hex. Cap Bolt	M8x40	2
100-1	Washer	M8	2	133	Lock Washer	M8	2
100-2	Lock Washer	M8	2	133-1	Washer	M8	2
102	Support Shaft		1	134	Adjustable Bracket		1
102-1	C-Ring	S-19	1	135	Scale		1
103	Hex. Cap Bolt	M12x35	2	135-1	Round Head Screw		4
104	Motor Mount Bracket		1	136	Hex. Socket Cap Screw	M10x25	2
104-1	Washer	M12	1	137	Slide		1
104-2	Nut	1/2"	1	138	Blade Bracket-Left		1
105	Column		1	140	Hex. Cap Bolt	M8x25	2
106	Hex. Socket Cap Screw	M12x20	6	140-1	Lock Washer	M8	2

990505

PART LIST

Part No.	Description	Size No.	Q'ty	Part No.	Description	Size No.	Q'ty
141	Lock Handle	3/8x30	1	171-2	Washer	M6	2
142	Stationary Plate		1	171-3	Hex. Cap Bolt	M6x16	2
143	Set Screw	M8x10	4	172	Handle	M12	1
144	Blade Bracket-Right		1	173	Nut	M12	2
145	Hex. Cap Bolt	M6x12	1	175	Round Head Screw	M5x10	2
145-1	Lock Washer	M6	1	176	Indicator Scale		1
146	Washer	M6	1	177	Slide Bracket		1
147	Wire Brush		1	178	Tension Shaft		1
148	Wire Brush Rod		1	179	Key	5x15	1
149	Guide Bracket-Right		1	180	Handwheel		1
149-1	Nozzle		1	181	Disc Spring		13
149-2	Hex. Socket Cap Screw	M8x50	1	182	Flat Washer		1
149-3	Lock Washer	M8	1	183	Tension Indicator		1
149-4	Washer	5/16x18x2	1	184	Thrust Bearing	51104	1
149-5	Pin		1	187	Slide		1
150	Spring		1	188	Set Screw	5/16"x3/8	1
151	Set Screw	M6x8	1	189	Extension Bar		1
152	Nut	M10	1	190	Blade Wheel Shaft		1
153	Hex. Socket Cap Screw	M8x45	1	191	Nut	M16	1
153-1	Lock Washer	M8	1	191-1	Set Screw	M6x8	1
153-2	Washer	5/16x18x2	1	192	Hex. Socket Cap Screw	M8x20	4
155	Nut	M12	1	193	Hex. Socket Cap Screw	M12x20	1
155-1	Hex. Cap Bolt	M12x30	4	193-1	Washer		1
155-2	Lock Washer	M12	4	194	Gib		2
155-3	Washer	M12	4	195	Hex. Cap Bolt	M16x30	3
156	Stand Bolt	M12x50	1	196	Hex. Cap Bolt	M10x60	3
157	Blade Guard		1	197	Lock Washer	M10	3
157-1	Blade Guard-Down		1	V96	Pulley Cover		1
158	Lock Knob	1/4x10	2	V96-1	Pulley Cover Plate		1
159	Hose	8x700MM	1	V96-2	Knob	3/8"	1
160	Adjusting Valve		2	V96-3	Washer	M10	2
160-1	Hose	8x320MM	1	V96-4	Support Shaft		1
160-2	Hose Clamp	14MM	2	V96-5	Support Rack		1
160-3	Brace		2	V96-6	Lock Washer	M8	1
160-4	Lock Washer	M6	4	V96-7	Nut	5/16"	1
160-5	Hex. Cap Bolt	M6x12	4	V96-8	Hex. Cap Bolt	M6x12	2
161	Power Indicator Light		1	V97	Gear Box Pulley		1
162	Start Switch		1	V97-1	Pulley Cover Fix Plate		1
163	Emergency Stop Switch		1	V97-2	Fix Rod		1
164	Pump Switch		1	V97-3	Washer	M8	1
165	Speed Control Valve		1	V97-4	Lock Washer	M8	1
166	Connection Tube		1	V97-5	Hex. Cap Bolt	M8x20	1
166-1	Hose	5/16"x400MM	1	V97-6	Hex. Cap Bolt	M8x45	1
166-2	Hose	5/16"x940MM	1	V97-7	Washer	M8	2
168	Control Box		1	V97-8	Lock Washer	M8	1
169	Control Panel		1	V97-9	Nut	M8	1
169-1	Oil Regulating Micro Switch		1	V98	Belt		1
169-2	On / Off Switch		1	V99	Variable Speed Adjustable		1
170	Round Head Screw	M5x8	6				
171	Wheel Box-Left		1				
171-1	Lock Plate		1				

990505