KENT USA®

Since 1979

KLS-1840/1860/2060/2080
Manual Economy Lathe
Operations Manual

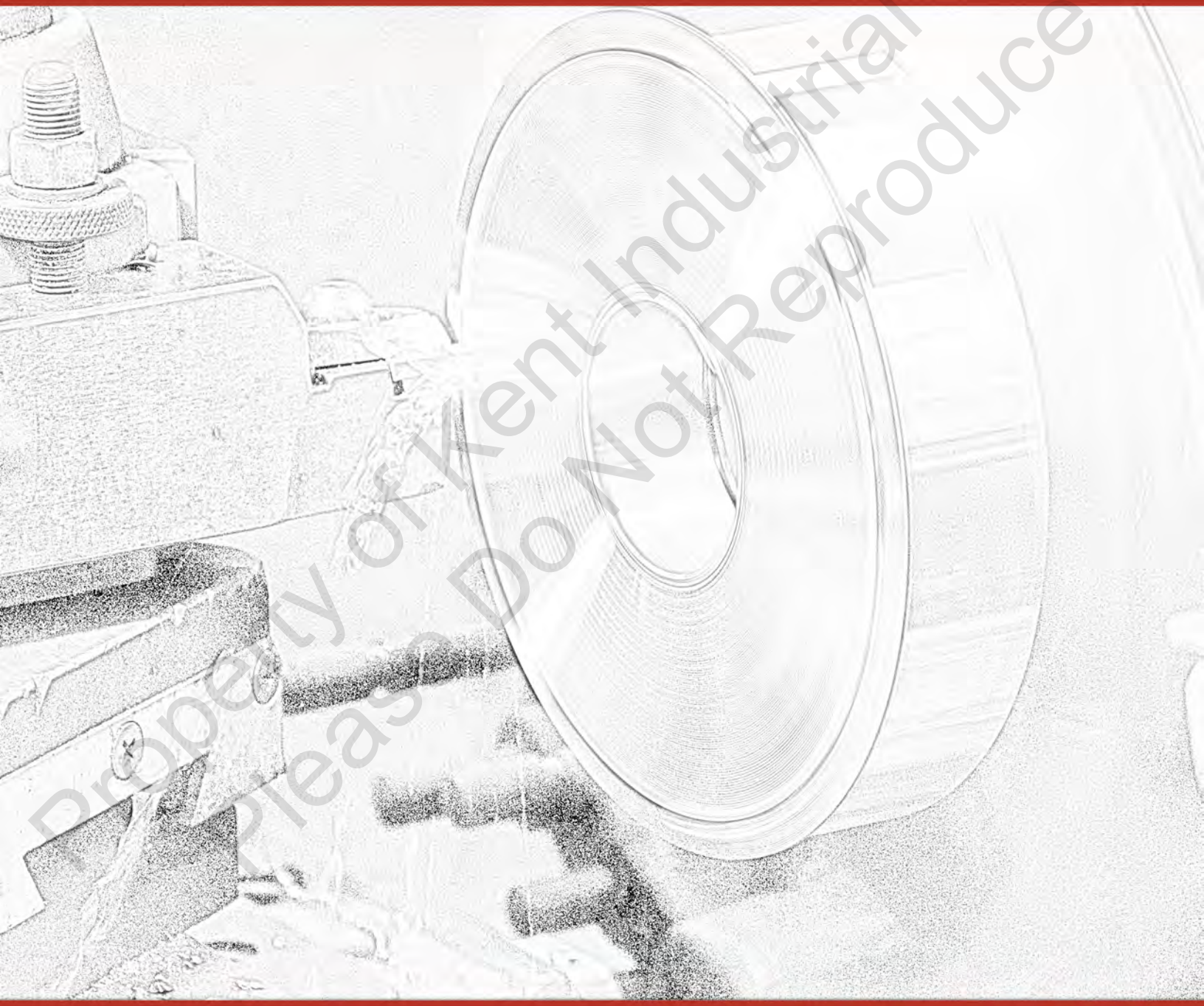

Property of Kent Industrial USA
Please Do Not Reproduce

www.kentusa.com | 1.800.KENT.USA

IT IS NECESSARY FOR YOU TO READ THIS BOOK CAREFULLY AND THOROUGHLY BEFORE OPERATING THE MACHINE.

KLS
XL

Property of Kent Industrial USA
Please Do Not Reproduce

CONTENTS

		Page
1.	APPLICATION	3
2.	SPECIFICATIONS	4
3.	DRIVING SYSTEM	6
4.	CONTROL SYSTEM	16
5.	LUBRICATION	18
6.	HANDLING, INSTALLATION & TRIAL RUNNING	21
7.	MAINTENANCE AND ADJUSTMENT	25
8.	LIST OF BALL & ROLLER BEARINGS AND THEIR ARRANGEMENT	34
9.	LIST OF WEARING PARTS AND THEIR DRAWINGS	37
10.	ELECTRICAL SYSTEM	51

Property of Kalmar Industrial USA
Please Do Not Reproduce

1. Application

This machine can perform all kinds of turning jobs, such as internal and external cylindrical surface turning, cutting of various metric. Whitworth, module and diametral threads as well as taper turning, other rotating surface turning, facing drilling reaming and broaching for oil grooves and keyways etc. The workpiece preduced on the lathes can achieve the working accuracy of Grade II and excellent surface finish. And the gap type lathee are also capable of turning flat and grotesque workpiece. In addition to those, the machine has a function of foot-brake, also a function of hand-brake. This design structure makes operation of the machine be very convenient and brake sensitive and reliable. If hand-brake is selected to turn threads it is necessary to pay a great attention to operation of handle, that is to say, handle should not be directly shifted from the position of forward rotating to the position of reverse rotating. Correct operation is that relevant handle should be first shifted from the position of forward rotating to middle braking position where it must be a little stop for about two seconds, and then, it is shifted to the position of reverse rotating. Like this doing it, serving life of the machine can be greatly raised.

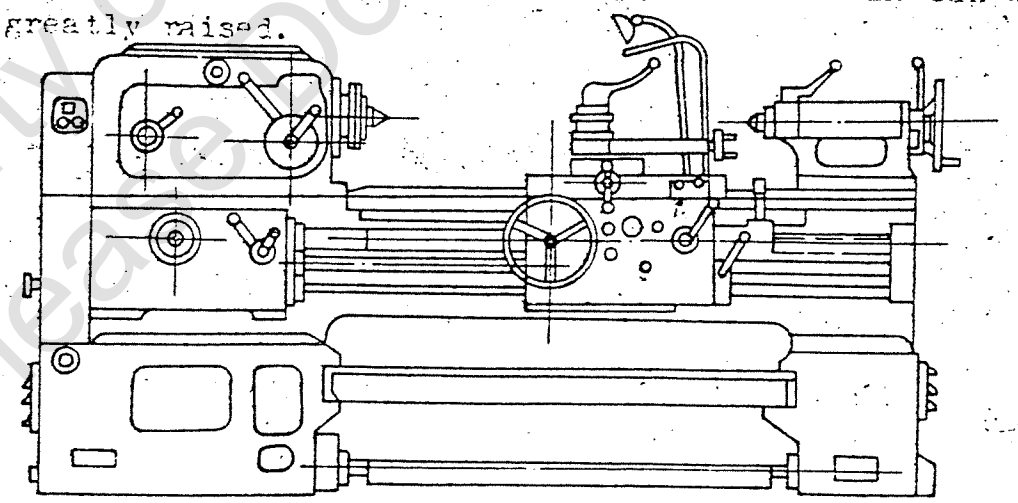

Fig.1 General view of the lathe

Property of Kent Industrial USA
Please Do Not Reproduce

Type	KLS1830	KLS1840	KLS1850	KLS1860	KLS2030	KLS2040	KLS2060	KLS2080	KLS2430	KLS2440	KLS2460	KLS2480
Max. swing over bed	400 mm				500 mm				610 mm			
Max. swing within gap	630 mm				720 mm				830 mm			
Avaliable width of gap	210 mm											
Max. length of workpiece	750 mm	1000 mm	1500 mm	2000 mm	750 mm	1000 mm	1500 mm	2000 mm	750 mm	1000 mm	1500 mm	2000 mm
Max. turning length	650 mm	900 mm	1400 mm	1900 mm	650 mm	900 mm	1400 mm	1900 mm	620 mm	870 mm	1370 mm	1870 mm
Height from the center line of spindle to flatway of bed	205 mm				250 mm				305 mm			
Max. swing over square tool post	210 mm				300 mm				370 mm			
Taper of hole in spindle	(1 : 30)											
Spindle thread: Number of spindle forward	24											
Spindle thread: Range of speed	10 — 1400 r/min											
Spindle thread: Number of spindle reverse	24											
Spindle thread: Range of speed	10 — 1400 r/min											
Spindle bore	76 mm 3"											
Feed: Number of longitudinal feed and cross feed	62											
Feed: Longitudinal normal feeds per revolution of spindle	0.10-1.5mm/r 0.004-0.05"/r											
Feed: Longitudinal fine feeds per revolution of spindle	0.028-0.095mm/r 0.0011-0.0038"/r											
Feed: Longitudinal coarse feeds per revolution of spindle	1.60-6.00mm/r 0.064-0.24"/r											
Feed: Traverse normal feeds per revolution of spindle	0.05-0.75 mm/r 0.002-0.03"/r											
Feed: Traverse fine feeds per revolution of spindle	0.014-0.045mm/r 0.0005-0.0018"/r											
Feed: Traverse coarse feeds per revolution of spindle	0.80 -3.00mm/r 0.03-0.12"/r											
Rapid travelling of carriage in long.	4m/min											
Rapid travelling of carriage in cross	2m/min											
Range of cutting threads: Number of metric threads	40											
Range of cutting threads: Range of metric threads cutting	0.5-96mm											
Range of cutting threads: Number of Whitworth threads	34											
Range of cutting threads: Range of Whitworth thread cutting	48-4t.p.i.											
Range of cutting threads: Number of module threads	32											
Range of cutting threads: Range of module threads cutting	0.25-24mm											
Range of cutting threads: Number of diametral threads	45											
Range of cutting threads: Range of diametral threads cutting	1-192											
Max. travel of cross slide	320 mm								420			

Property of Technical Institute Laboratories
Please Do Not Remove

Specifications

Items	KLS 1830	KLS 1840	KLS 1860	KLS 1880	KLS 2030	KLS 2040	KLS 2060	KLS 2080	KLS 2430	KLS 2440	KLS 2460	KLS 2480
Max. travel of compound rest slide						140 mm						
Max. travel of compound rest slide						±90°						
Vertical distance from center line of spindle to supporting bottom of tool						26 mm						
Sectics size of tool shank						25mm x 25 mm						
Tailstock spindle diameter						75 mm						
Max. travel of tailstock spindle						150 mm						
Taper of tailstock spindle hole						Morse No. 5						
Pitch of leadscrew						4 t.p.i.						
Main motor: Type						Y132 M-4-B3						
Main motor: Power						7.5 kw						
Main motor: Speed						1450 r/min						
Coolant pump: type						A08 - 25						
Coolant pump: Power						90W						
Coolant pump: Delivery capacity						25L/min						
Feed & traverse motor of apron: type						AOS 5634						
Feed & traverse motor of apron: Power						250 w						
Feed & traverse motor of apron: Speed						1360 r/min						
Lubricating motor: type						AO 5624						
Lubricating motor: Power						120 w						
Lubricating motor: Speed						1500 r/min						
V-belt for main drive: type		B2134				B - 2235				B 2337		
V-belt for main drive: Number						3						
V-belt for lubricating pump: type						O - 584						
V-belt for lubricating pump: Number						1						
Net weight (Kg)	1990	2070	2220	2570	2060	2140	2290	2640	21[illegible]	2260	2437	2787
Overall of the machine: Length (mm)	2418	2668	3168	3668	2418	2668	3168	3668	24[illegible]	2668	3168	3668
Overall of the machine: Width (mm)	1000				1037					1130		
Overall of the machine: Height (mm)	1267				1312					1367		
Width of bed	400 mm											

Property of Kent State University
Please Do Not Remove

3. Driving System

3.1 Main Driver System

A component is mounted in chuck or between centers and driven by motor through driving mechanism (Fig.2) The motor through V-belts drives shaft I and then through gears in the headstock power is transmitted to the spindle, speeds are changed by means of levers 1 and 2 (Fig.3) which shift the sliding gears 1-5, 2-6, 7-10, 8-11, 9-12, and by means of gears 26-27, the spindle can obtain various high speeds, and with engaged again gears 14-23, 24,25, 29-28, 32-33 the spindle can obtain various low speeds.

The driving calculations of various revolution are follows:

1st. speed $1450 \frac{130}{230} \cdot \frac{52}{43} \cdot \frac{22}{58} \cdot \frac{20}{80} \cdot \frac{20}{80} \cdot \frac{26}{58} = 10$ r/min

2nd. speed $1450 \frac{130}{230} \cdot \frac{56}{38} \cdot \frac{22}{58} \cdot \frac{20}{80} \cdot \frac{20}{80} \cdot \frac{20}{58} = 12.5$ r/min

3rd. speed $1450 \frac{130}{230} \cdot \frac{51}{43} \cdot \frac{30}{50} \cdot \frac{20}{80} \cdot \frac{20}{80} \cdot \frac{26}{58} = 16$ r/min

4th. speed $1450 \frac{130}{230} \cdot \frac{56}{38} \cdot \frac{30}{50} \cdot \frac{20}{80} \cdot \frac{20}{80} \cdot \frac{26}{58} = 20$ r/min

5th. speed $1450 \frac{130}{230} \cdot \frac{51}{43} \cdot \frac{39}{41} \cdot \frac{20}{80} \cdot \frac{20}{80} \cdot \frac{26}{58} = 25$ r/min

6th. speed $1450 \frac{130}{230} \cdot \frac{56}{38} \cdot \frac{39}{41} \cdot \frac{20}{80} \cdot \frac{20}{80} \cdot \frac{26}{58} = 32$ r/min

7th. speed $1450 \frac{130}{230} \cdot \frac{51}{43} \cdot \frac{22}{58} \cdot \frac{50}{50} \cdot \frac{20}{80} \cdot \frac{26}{58} = 40$ r/min

8th. speed $1450 \frac{130}{230} \cdot \frac{56}{38} \cdot \frac{22}{58} \cdot \frac{50}{50} \cdot \frac{20}{80} \cdot \frac{26}{58} = 50$ r/min

9th. speed $1450 \frac{130}{230} \cdot \frac{51}{43} \cdot \frac{30}{50} \cdot \frac{50}{50} \cdot \frac{20}{80} \cdot \frac{26}{58} = 63$ r/min

10th. speed $1450 \frac{130}{230} \cdot \frac{56}{38} \cdot \frac{30}{50} \cdot \frac{50}{50} \cdot \frac{20}{80} \cdot \frac{26}{58} = 80$ r/min

Property of the Museum of Mathematics and Technology

11th. speed 1450 $\frac{130}{230} \cdot \frac{51}{43} \cdot \frac{39}{41} \cdot \frac{50}{50} \cdot \frac{20}{80} \cdot \frac{26}{58}$ =100 r/min

12th. speed 1450 $\frac{130}{230} \cdot \frac{56}{38} \cdot \frac{39}{41} \cdot \frac{50}{50} \cdot \frac{20}{80} \cdot \frac{26}{58}$ =125r/min

13th. speed 1450 $\frac{130}{230} \cdot \frac{51}{43} \cdot \frac{22}{58} \cdot \frac{50}{50} \cdot \frac{51}{50} \cdot \frac{26}{58}$ =160 r/min

14th. speed 1450 $\frac{130}{230} \cdot \frac{56}{38} \cdot \frac{22}{58} \cdot \frac{50}{50} \cdot \frac{51}{50} \cdot \frac{26}{58}$ =200r/min

15th. speed 1450 $\frac{130}{230} \cdot \frac{51}{43} \cdot \frac{30}{50} \cdot \frac{50}{50} \cdot \frac{51}{50} \cdot \frac{26}{58}$ =250 r/min

16th. speed 1450 $\frac{130}{230} \cdot \frac{56}{38} \cdot \frac{30}{50} \cdot \frac{50}{50} \cdot \frac{51}{50} \cdot \frac{26}{58}$ =320r/min

17th. speed 1450 $\frac{130}{230} \cdot \frac{51}{43} \cdot \frac{39}{41} \cdot \frac{50}{50} \cdot \frac{51}{50} \cdot \frac{26}{58}$ =400r/min

18th. speed 1450 $\frac{130}{230} \cdot \frac{51}{43} \cdot \frac{22}{58} \cdot \frac{63}{50}$ =450r/min

19th. speed 1450 $\frac{130}{230} \cdot \frac{56}{38} \cdot \frac{39}{41} \cdot \frac{50}{50} \cdot \frac{51}{50} \cdot \frac{26}{58}$ =500r/min

20th. speed 1450 $\frac{130}{230} \cdot \frac{56}{38} \cdot \frac{22}{58} \cdot \frac{63}{50}$ =560r/min

21th. speed 1450 $\frac{130}{230} \cdot \frac{51}{43} \cdot \frac{30}{50} \cdot \frac{63}{50}$ =710r/min

22th. speed 1450 $\frac{130}{230} \cdot \frac{56}{38} \cdot \frac{30}{50} \cdot \frac{63}{50}$ =900r/min

23th. speed 1450 $\frac{130}{230} \cdot \frac{51}{43} \cdot \frac{39}{41} \cdot \frac{63}{50}$ =1120r/min

24th. speed 1450 $\frac{130}{230} \cdot \frac{56}{38} \cdot \frac{39}{41} \cdot \frac{63}{50}$ =1400r/min

Property of Kern Industrial USA
Please Do Not Reproduce

3.2 Feed System

The longitudinal traverse of carriage actuates in three different ways:

1/ Through the feed box and apron by feed rod to make the small gear 70 (Fing.2) engaged with gears rotating;

2/ Through feed box, by leadscrew and split nut;

3/ By means of handwheel through the gears which are set within the apron driving small gears to make rack be engaged

The feed box is transmitted through the shafts X in the headstock and change gears in the change box.

Traverse feed of the carriage is equel to ½ relative longitudinal feed.

After shifting the lever 3 (Fig.3) on the front of the headstock, which makes the gear 18 (Fig.2) engaged with the gear 16, longitudinal or cross feed and pitches are enlarged as follows:

In conditions of the spindle speed of 450-1400 r/min (*360-1120r/min). feed is equal to 1/2.8 of standard feed (it isn't used turning threads).

At spindle speed of 40 - 125 r/min (*32-100 r/min). Coarsened to 4 times. At spinle speed of 10-32 r/min (*8-25 r/min), coarsened to 16 times.

All of above pitches and feeds are indicated in the name plate of the lathe.

Property of Kent Industrial USA
Please Do Not Reproduce

Calculation of longitudinal feed:

32 longitudinal feeds can be obtained through gear train for cutting Whitworth threads: (0.1-1.5mm/min.)

$$S_{long}=1\cdot\frac{58}{58}\cdot\frac{33}{33}\cdot\frac{50}{63}\cdot i_{normal}\cdot\frac{36}{25}\,i_{coarse}\,\frac{28}{56}\cdot\frac{36}{56}\cdot\frac{4}{29}\cdot$$

$$\cdot\frac{40}{48}\cdot\frac{28}{80}\cdot 12\pi m$$

14 longitudinal feeds can be obtained through gear train for cutting metric threads and at special high speed of spindle. 0.028 - 0.096 mm/r

$$S_{long}=1\cdot\frac{50}{63}\cdot\frac{44}{44}\cdot\frac{26}{56}\cdot\frac{33}{33}\cdot\frac{50}{63}\cdot i_{normal}\cdot\frac{25}{36}\cdot$$

$$\frac{18}{45}\cdot\frac{15}{45}\cdot\frac{28}{56}\cdot\frac{36}{56}\cdot\frac{4}{29}\cdot\frac{40}{48}\cdot\frac{28}{80}\,12\pi M$$

Note: The artivle indleated with aymbol (*) showe that it is suitable for fatte with sax. swing over bed of 610 mm.

16 longituitnal feeds, ranging from 1.6 —6.0 mm/r. can be obtained throngh gear train of special lowest or middle speeds for cutting Whitworth threads:

Property of IRT Industrial USA
Please Do Not Reproduce

$$S_{long.} = i \cdot \frac{58}{26} \left\langle \begin{matrix} \frac{50}{50} \\ \frac{80}{20} \end{matrix} \right\rangle \frac{80}{20} \cdot \frac{44}{44} \cdot \frac{26}{58} \cdot \frac{33}{33} \cdot \frac{50}{63} \cdot i_{normal} \cdot \frac{36}{25}$$

$$i_{coarse} \cdot \frac{28}{56} \cdot \frac{36}{56} \cdot \frac{4}{29} \cdot \frac{40}{48} \cdot \frac{28}{80} \cdot 12\pi M$$

Where: $i_{coarse} = \frac{18}{45} \cdot \frac{15}{48} = \frac{1}{8}$; $\frac{38}{35} \cdot \frac{15}{48} = \frac{1}{4}$; $\frac{18}{45} \cdot \frac{35}{28} = \frac{1}{2}$; $\frac{28}{35} \cdot \frac{35}{28} = 1$

$$i_{normal} = \frac{26}{28}; \frac{28}{28}; \frac{32}{28}; \frac{36}{28}; \frac{19}{14}; \frac{20}{14}; \frac{33}{21}; \frac{36}{21}$$

Calculation for cutting metric threads:

$$t = \frac{58}{58} \cdot \frac{33}{33} \cdot \frac{50}{63} \cdot \frac{25}{36} \cdot \frac{32}{28} \cdot \frac{25}{36} \cdot \frac{36}{25} \cdot \frac{18}{45} \cdot \frac{15}{48} \cdot \frac{25.4}{4} = 0.5 \text{ m}$$

Calculation for cutting whitworth threads:

$$n = \frac{25.4}{\frac{58}{58} \cdot \frac{33}{33} \cdot \frac{50}{63} \cdot \frac{28}{32} \cdot \frac{36}{25} \cdot \frac{28}{35} \cdot \frac{35}{28} \cdot \frac{25.4}{4}} = 4 \text{ t.p.i}$$

Calcuation for cutting modular threads:

$$M = \frac{58}{58} \cdot \frac{33}{33} \cdot \frac{48}{77} \cdot \frac{25}{36} \cdot \frac{32}{28} \cdot \frac{25}{36} \cdot \frac{36}{25} \cdot \frac{28}{35} \cdot \frac{15}{48} \cdot \frac{25.4}{4} = 0.25 \text{ mm}$$

Calcuation for cutting diametral threads:

$$D_p = \frac{\pi \cdot 25.4}{\frac{58}{58} \cdot \frac{33}{33} \cdot \frac{48}{77} \cdot \frac{28}{28} \cdot \frac{36}{25} \cdot \frac{28}{35} \cdot \frac{35}{28} \cdot \frac{25.4}{4}} = 14$$

For cutting left hand threads, the direction of the leadscrew rotation can be changed through shifting the position of

Property of Kent Industrial USA
Please Do Not Reproduce

For cutting special threads which are not in the range given by the lathe, it is necessary to adopt special change gears made by user. Shift lever 5 to position V and lever 6 to position D.

Property of Kent Industrial USA
Please Do Not Reproduce

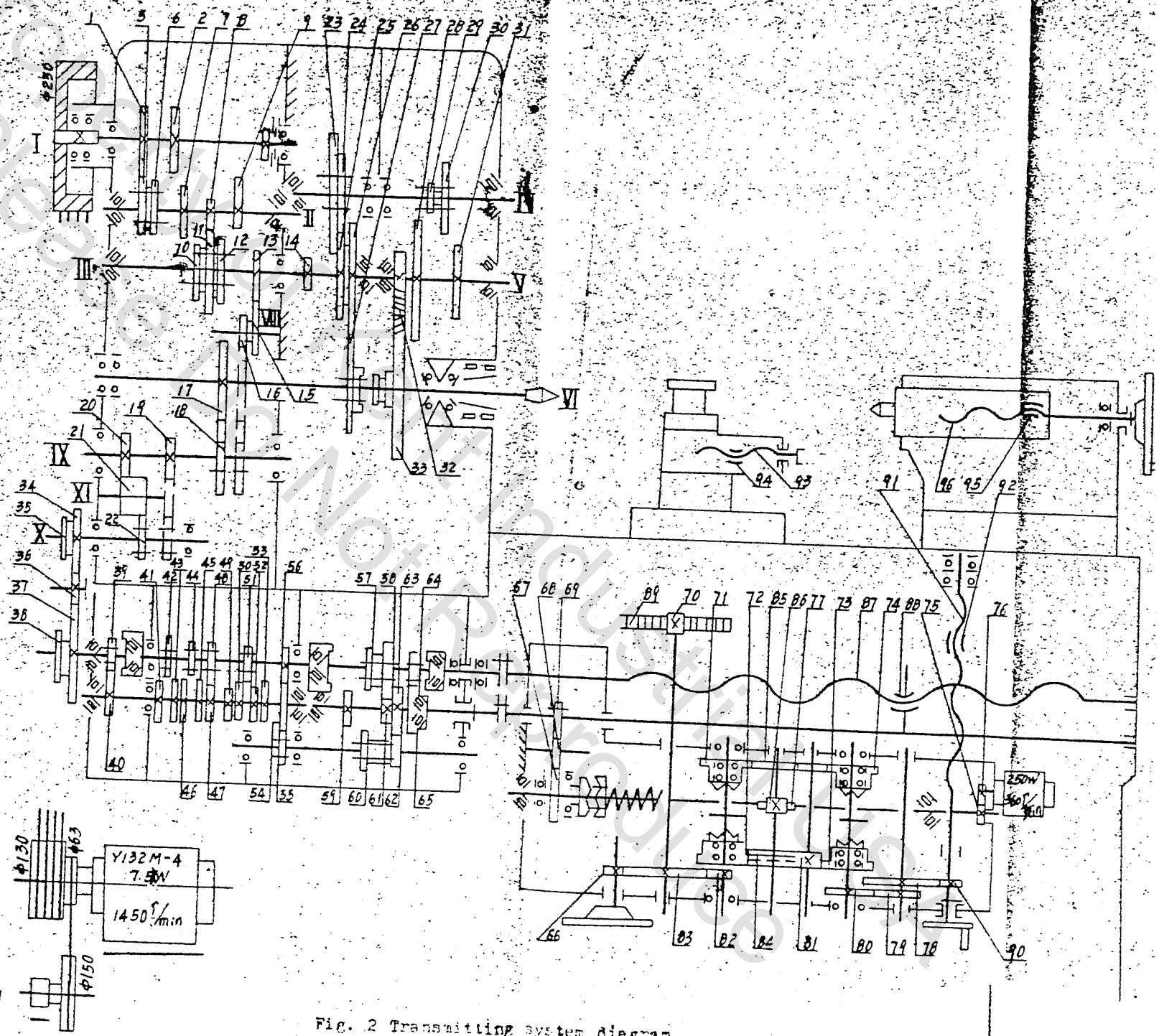

Fig. 2 Transmitting system diagram

Reproduced from Best Available Copy

Table of Gears, Worms, Wormwheels, Leadscrew and Nuts

Table 1

Component	Headstock											
Number in Fig. 2	1	2			5	6	7	8	9	10	11	12
Teeth or Number of threads	56	51			32	43	39	22	30	41	56	50
Module/pitch (mm)	2.25											
Gear width/Nut Length (mm)**	12			12		13	17	15	12	15		12
Correction Coefficient ξ							+0.4			-0.4		
Material	45			45			40Cr	45				
Heat Treatment	Tooth local hardened G52											
Accuracy Grade	7 - 6 - 6 DC											

Component	Headstock														
Number in Fig. 2	13	14	15	16	17	18	19	20	21	22	23	24	25	26	27
Teeth or Number of Threads	44	20	44	26	56	58	33		25	33	80	50		63	50
Module/Pitch (mm)	2	2.5	2								2.5			3	
Gear width/Nut Length (mm)**	12	24	12			14	12		27	14	18	16		17	
Correction Coefficient ξ		0.64										+0.42			+0.15
Material	45	40Cr	45											40Cr	
Heat Treatment	Tooth local hardened G52														
Accuracy Grade	7-6-6 DC													6-DC	

Component	Headstock						Change gears				
Number in Fig. 2	28	29	30	31	32*	33*	34	35	36	37	38
Teeth or Number of Threads	80	20	51	50	26	58	48	50	85	77	63
Module/Pitch (mm)	2.5				4		2				
Gear width/Nut Length (mm)	25	32	18	18	35	33	16				
Correction Coefficient ξ		+0.303		+0.303	+0.2	-0.344					
Material	45	40Cr		45	40Cr		45				
Heat Treatment	Tooth local hardened G52				Z						

Property of Technical USA
Please Do Not Reproduce

Tables of Gears, Worms, Wormwheels, Leadscrews and Nuts (cont'd) Table 1

Component	Headstock								
Number in Fig.2	39	40	41	42	43	44	45	46	47
Teeth or Number of Threads	25	36	49	14	20	21	33	36	26
Module/Pitch(mm)	2		3.75			2.25			
Gear Width/Nut Length(mm)**	12		13	12	13	12	18		
Correction Coefficient ξ	+0.4	+0.5	+0.15	+0.159	-0.349		+1.124	-0.465	+1.124
Material	45								
Heat Treatment	Tooth local hardened G48								
Accuracy Grade	7 - DC								

Component	Feed Box												
Number in Fig.2	48	49	50	51	52	53	54	55	56	57	58	59	60
Teeth or Number of Threads	28	28	36	28	32	36	36	29	25	28	48	35	28
Module/pitch(mm)	2.25					2							
Gear Width/Nut Length(mm)**	12	13	13	12	13	12				11	11		
Correction Coefficient ξ		-0.711	+0.244	+1.5	+0.6	+0.6	+0.4	+0.4		-0.3			
Material	45												40C
Heat Treatment	Tooth local hardened G48												
Accuracy Grade	7 - DC												

Component	Feed Box					Apron							
Number in Fig.2	61	62	63	64	65	66	67	68	69	70	71	72	
Teeth or Number of Threads	15	18	45	28	56	17	56	32	36	12			
Module/Pitch(mm)	2		1.5			1.75	1.5			2.5			
Gear Width/Nut Length(mm)**	13	15	11	12	11	14			18	32			
Correction Coefficient ξ	+0.3									+0.294			
Material	45		45			45	20Cr		45				
Heat Treatment	Tooth local hardened G48					Tooth local hardened G48	30.5 C59		Tooth local hard				
Accuracy Grade	7 - DC					8 - 7 - 7 - DC							

Tuley's Office Industrial USA Heads Post Office

Table 1
(cont'd)

Component	Apron											
Number in Fig. 2	75	76	77*	78	79	80	81	82	83	84	85	86*
Teeth or Number of Thread	24	18	4	59	48		30	28	80	40		29
Module/Pitch(mm)	1.5		2.5	2	1.75							2.5
Gear Width/Nut Length(mm)**	12	15	44	10			23	12	10		12	26
Correction Coefficient ξ												+0.205
Material	45		40Cr	45								HT 10-26
Heat Treatment	Tooth local hardened G48		Z	Tooth local hardened G48								
Accuracy Grade	6-7-7-DC		III	8-DC			8-7-7-DC			6-DC		III

Component	Apron			Carriage						Tailstock	
Number in Fig. 2	87	88	89	90	91	92	93	94		96	95
Teeth or Number of Threads	1		Rack	18	1 left hand		1			1 left hand	
Module/Pitch(mm)	1 /4"		2.5	2	1/5"		1/5"			5	
Gear Width/Nut Length(mm)**	40	111	26	22			32 35	22	35	28	50
Correction Coefficient ξ											
Material	Y40Mn	ZQSn 6-6-3	45	45	Y 40Mn		ZQSn 6-6-3	Y40Mn	W.P. C.I.	45	HT15-33
Heat Treatment											
Accuracy Grade	8			8-DC	9					9	

**-If part is leadscrew, write down the outer diameter in this column.

*-Helix angles of worm, wormwheel & skew bevel gear are shown in following table:

32	33	77	86
10°	10°	$0^{\circ}27'44''$	$0^{\circ}27'44''$
Right hand	Left hand	Right hand	Right hand

Property of Kent Industrial USA
Please Do Not Reproduce

4. Control System

To avoid damage of the machine, the operator should acquaint himself with function of all control mechanism (Fig.3 and Table 2) before starting the machine. When operating the machine, pay atlention to the following:

1/ Levers at the front of headstock for changing gears can be manipulated only when the machine is stopped,

2/ Levers and handle on feed for changing gears can be manipulated only at low speed or when or when machine is stopped.

3/ Before starting the machine, observe whether all levers are set on proper positions.

4/ When loading/unloading work or when the operator leaves the machine, the motor should be stopped.

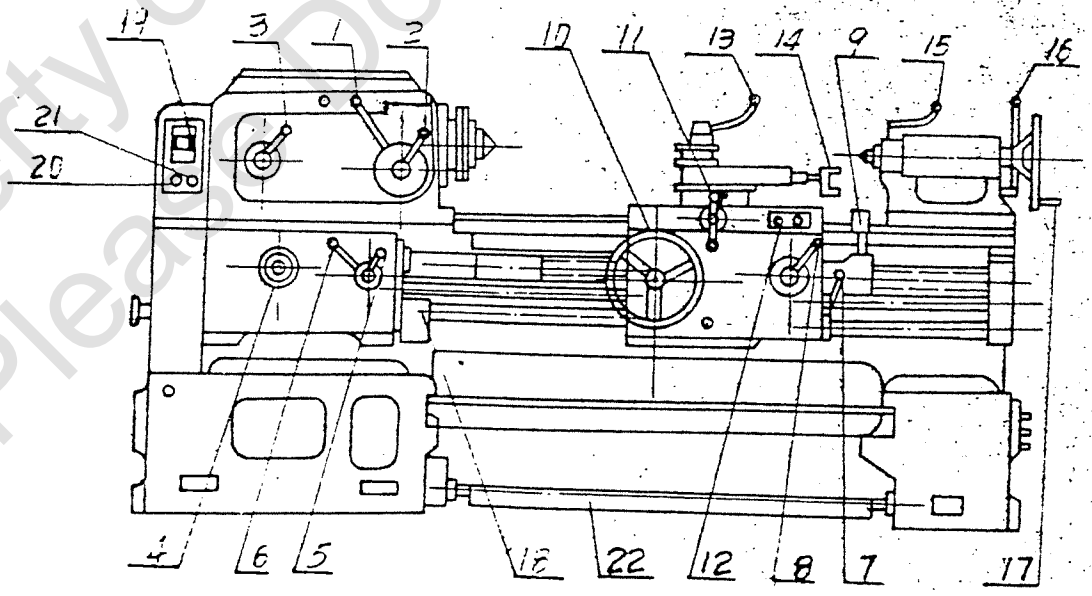

Fig. 3 Controls

Property of Kent Industrial USA
Please Do Not Reproduce

1.2 Spindle speed change levers
3. Coarse pitch and L. & R. thread cutting change lever
4.5 Pitch and feed adjusting handles
6. Lever for changing kinds of threads, leadscrew and feed rod
7. Lever for forward or reverse rotating of spindle
8. Split nut control lever
9. Joystick lever with a push-button for power longitudinal or cross feed and four way rapid power traverse
10. Handwheel for manual carriage traverse
11. Cross slide traverse handle
12. Emergency stop button and selector of hand-brake
13. Index and fixing lever of square tool post
14. Compound rest slide traverse handle
15. Tailstock center sleeve fixing lever
16. Tailstock quick clamping lever
17. Tailstock center sleeve traverse handwheel
18. Push button station for control and brake of main motor
19. Mains switch
20. Coolant pump switch
21. Mains-key-switch
22. Foot-brake pedal

Property of Historical NASA
Please Do Not Remove

5. Lubrication System

All rubbing surfaces of the machine should be regularly and systematically lubricated to ensure the reliability of operation and to reduce the wear of the lathe parts and power consumption therefore the operater should read the following instructions:

1/ The lubricant used for this lathe is No. 30 mechine oil, the viscosity of which is 3.81^{0}-4.59^{0} 10^{-6} m^{2}/S. The users may select the oil of viscosity within above range according to climatie conditons. The headstock and feed box adopt the external centralized pressure lubricating system. The oil in bed leg and apron should be renewed once every 50-60 days for the shops which work on two shift basis. The first renewal of oil should bake place to days after operation and 2nd renewal 20 days, thereafter in order to dischange the dirt remained during trial ruaning. After draining the used oil the oil troughs and wicks should be thoroughly washed with kerosene. Filter the oil before refilling.

2/ The lubricating oil fills into headstock and feed box by the oil pump through V-belts. To examine the function of the lubrication system, make use of the sight glass in the front of headstock after starting. After starting the main drive motor for one minute. oil mist occures in the headstock to lubricate the parts and then may operate the spindle.

3/ An oil tank is under apron, oil lever in the tank should be always kept up to the mark of oil guage. All bearings and worm in the apron are oiled by wicks from the oil through on the top of apron. The other parts in the apron are lubricated by bear splashing If oil lever in the apron in below the oil mark of oil mark of oil gauge, fill oil into the apron through the

Property of Kent Industrial USA
Please Do Not Reproduce

oil add hole (Fig.4)

4/ The lubricating oil for bedways and saddle is supplied by oil from oil box mounted inside carriage. Oil once a shift. When oiling, shift saddle hand-wheel, and make the cross slide move to the rear of the saddle. And then fill oil into the oil box. Felts placed at both ends of the saddle should be washed with kersone once a week, and replaced with new ones when worn out.

5/ There is a cock on the shaft end of change, turn the cock once a shift to make calcium grease No.2 in the shaft to supply lubricating between the shaft and sleeve.

6/ Oil holes of tailstock are used lubricate center sleeve and leadscrew by hand once every shift.

7/ The journals of the leadscrew, feed rod, and the rotation reversing shaft are oiled by wick from the oil through on the top of the rear bracket of the leadscrew once every shift.

KLS
XL

Property of Kentucky Industrial USA
Please Do Not Reproduce

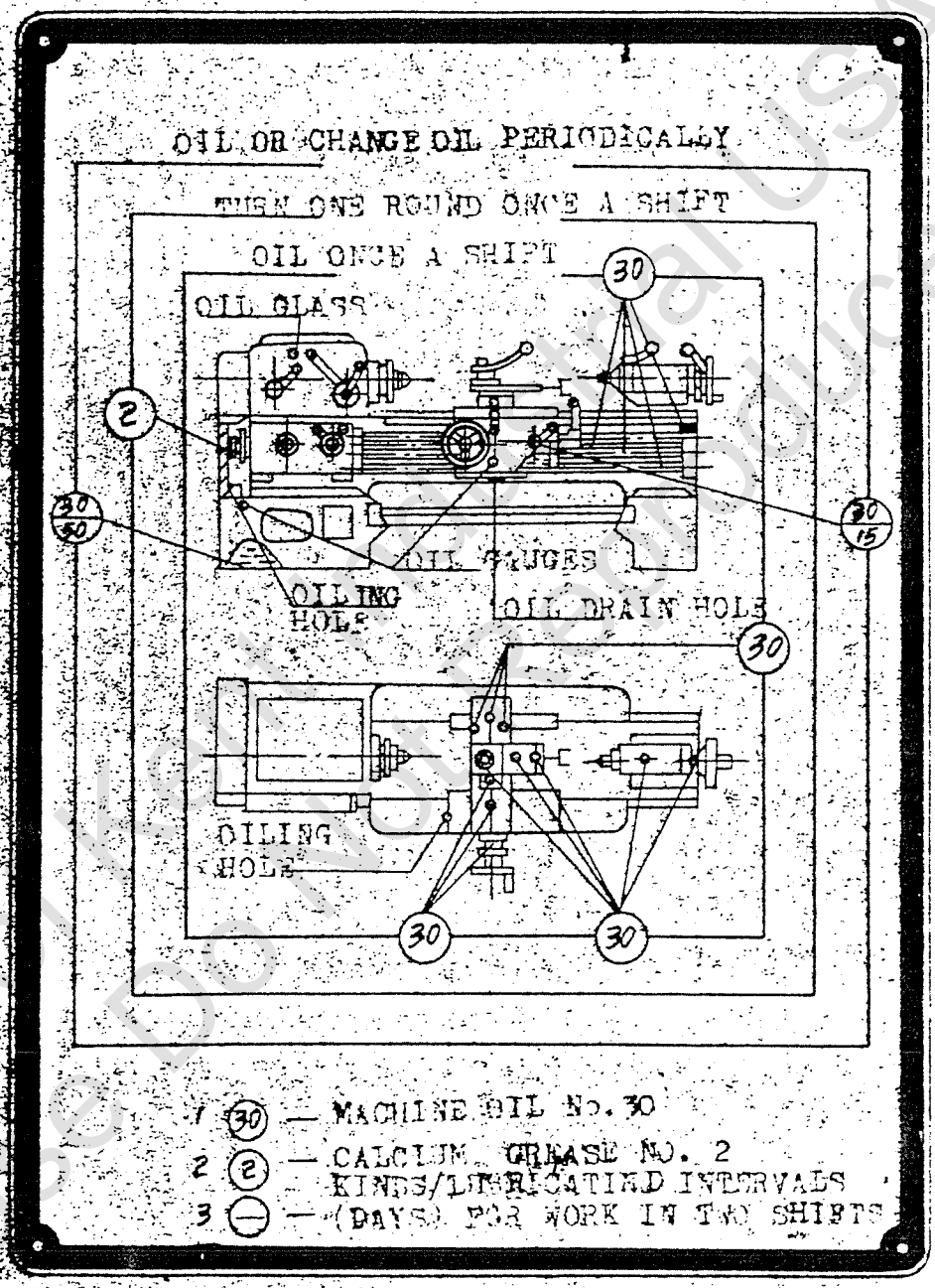

Fig. 4 Lubrication system

Property of the Central USA Regional Office

6. Handling, Installation and Trial Running

6.1 Handling

To lift the lathe packed in wooden case by a crane, strong steel wire rope should be looped in the rope marks pointed lateral sides of the case. When transporting and unloading the case, bumping and shocking should be avoided. In any case, do not over incline the case. If rolls are used for the transport of case, it is important that the inclination of condition of the slope should not exceed 15°, the diameter of the tools used must not be over 70 mm. Never place the on a prismatic body or upside down.

When the lathe is unpacked, first inspect its seterior condition and check attachments according to the PACKING LIST.

When lifting the unpacked lathe with crane, insert strong steel wire the first hanging hole and third hanging hole of bed leg (see the Fig. 6). And the wooden blocks or rubber pipe should be padded between the strong steel wire ropes and the lathe. While lifting, by removing the carriage to balance the lathe.

6.2 Installation

The lathe has been carefully inspected and tested before despatch from the Works. Pay attention to that the lathe should be carefully and accurately installed, otherwise its working accuracy or service

Property of Kent Industrial USA
Please Do Not Reproduce

life would be affected. Dimensions of the foundation are to do in accordance with the Foundation Plan Fig. 5 and the depth of foundations to the property of local soil.

The lathe is supported by means of six pair of iron wedges of 40-60 mm width 140 mm long and inclination of 5°. When placing each pair large ends of bottom wedges, facing inward and that of top wedge facing outward, the bottom wedge are embodied in cement mortar, while the top wedge is adjustable. The accuracy of installation is tested by means of a spirit level which is placed respectively at two ends of the bedways. The readings of the level should not be over 0.06/1000 in both longitudinal and traverse directions.

If not so, first make rough adjustment by means of wedges. After doing this, pour cement mortar into foundation bolt holes. When the mortar has fully set, make fine adjustment by means of wedges and nuts of foundation bolts until the desired accuracy is obtained. The foundation bolts should be evenly tightened to avoid impairing the accuracy of installation. Finally fill cement mortar into the space between foundation and lathe legs and trim the surfaces around the base leg to prevent ingress of coolant and oil.

6.3 Cleaning and Trial Running

After installation, clean carefully the lathe surface coating of anticorrosive slush with kerosene moistened cotton yarn waste and wash the interior of the headstock with warmed kerosene.

Property of Kent Machine Tool
Please Do Not Remove

After all oil wicks have been washed and dried, be sure to put them back to their original positions. Leadscrew, feed rod, guideways etc. should be carefully wiped dry and covered with a film of oil against rusting. Before using the lathe, lubricate it in accordance with lubrication system diagram and carefully read over the two chapters in this book on construction and control system to acquaint with all control levers and their functions, and check the working conditions of all parts manually. Before connecting the machine to the shop mains, check whether the electric system is in proper order, specially with respect to moisture.

After the machine is connected to the mains, start it first for trial running without load then proceed with normal operation. At the same time, also check whether the motor runs in accordance with defined direction.

Property of Kent Machine USA
Please Do Not Sell

Fig.5 Foundation plan

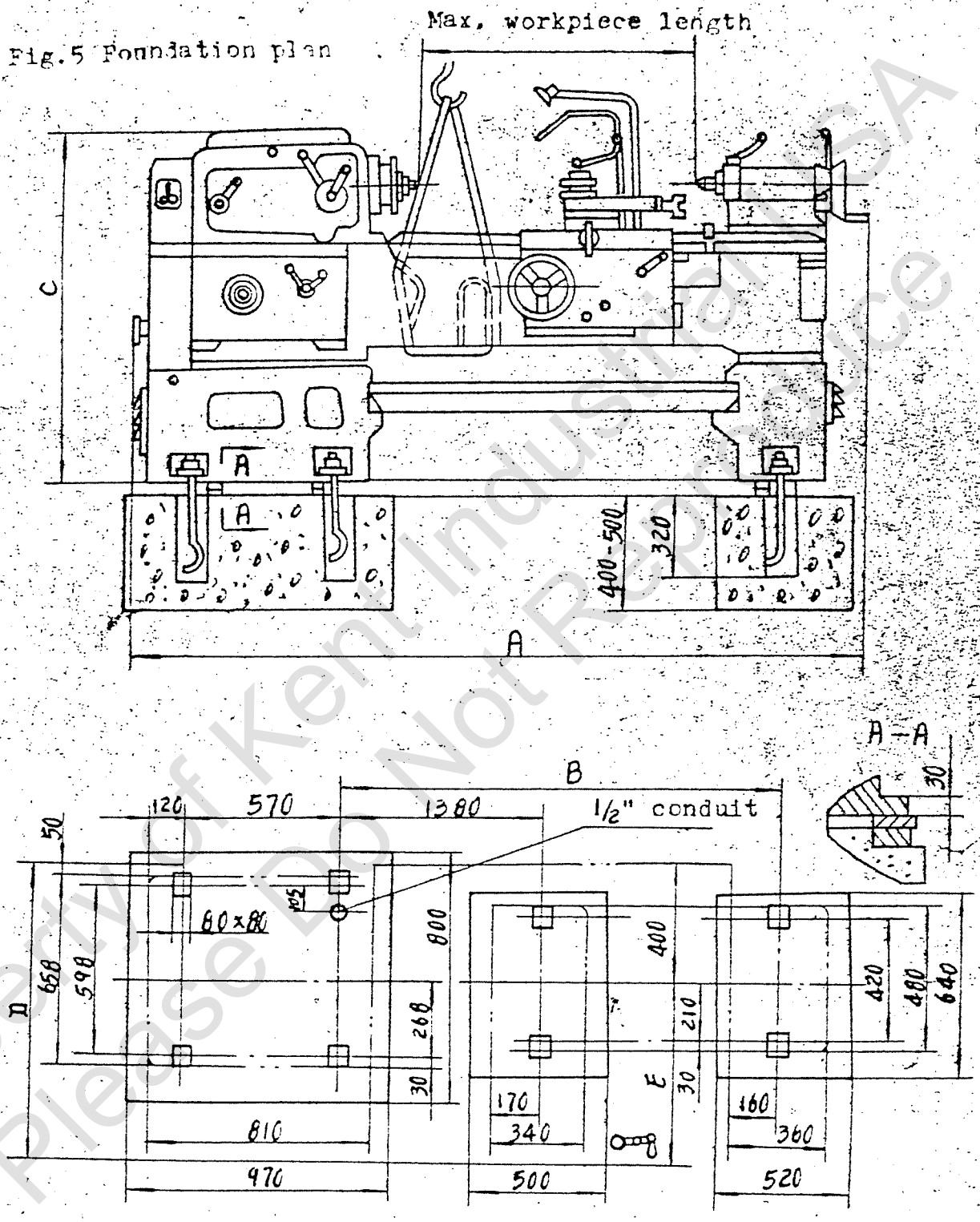

Max. length of workpiece	A	B
750	2418	1370
1000	2668	1620
1500	3168	2120
2000	3668	2620

Max. swing dia.	C	D	E
400	1267	1000	590
500	1312	1037	627

Note. The machine with max. workpiece

Property of Kent Industrial USA
Please Do Not Reproduce

7. Maintenance and Adjustment

7.1 When using this lathe, following instruction should be read:

1/ The oil level in all oil tanks should be always be maintained on the center of oil gauge, otherwise either ineffective lubrication or overheating with loss in power will occure.
2/ All oiling points should be poured with pure oil at regular intervals.
3/ Freqently inspect the oil flow through sight glass for ensuring proper lubrication of the headstock and the feedbox.
4/ Check and adjust the tension of motor bolts at regular intervals.
5/ Before daily operation, it is necessary to make the lathe idle running until all parts are thoroughly lubricated.
6/ With the spindle running at high speed, sudden change of the speed is not allowed.
7/ The leadscrew is used for thread cutting only. Never use it for turning operation.
8/ When applying steady rest or follower rest, contact surfaces of the rests should be lubricated.

7.2 Adjustment

7.2.1 Adjustment of Spindle

Excessive clearance in spindle bearings directly effects turning accuracy. The rotating accuracy of the spindle includes two kinds, i.e. run-out and axial slip. Run-out is controlled by the double row centripetal short roller bearing at the front of the spindle, axial slip is controlled by the

Property of Kent Industrial USA
Please Do Not Reproduce

double row centripetal ball thrust bearing at the rear of the spindle. checking method is according to G6 and G4 given by TestCertificate of delivery. If accuracy of the items exceed the permissible error, in the most cases it is enough to adjust the front bearings only. The adjusting method is as follows: Loosen the nut 1 (Fig. 6) and then tighten the nut 2 to eliminate play between the bearings of spindle, after adjustment, retighten the nut 1.

After the adjustment is made, run the spindle idle at high speed for an hour and observe the spindle bearings' temperature, it should not exceed 70°C. if the temperature exceeds this value, first loosen the nut a little, pay attention to tightening of the nut 2, then slightly loosen the locking screws on the nuts 2.

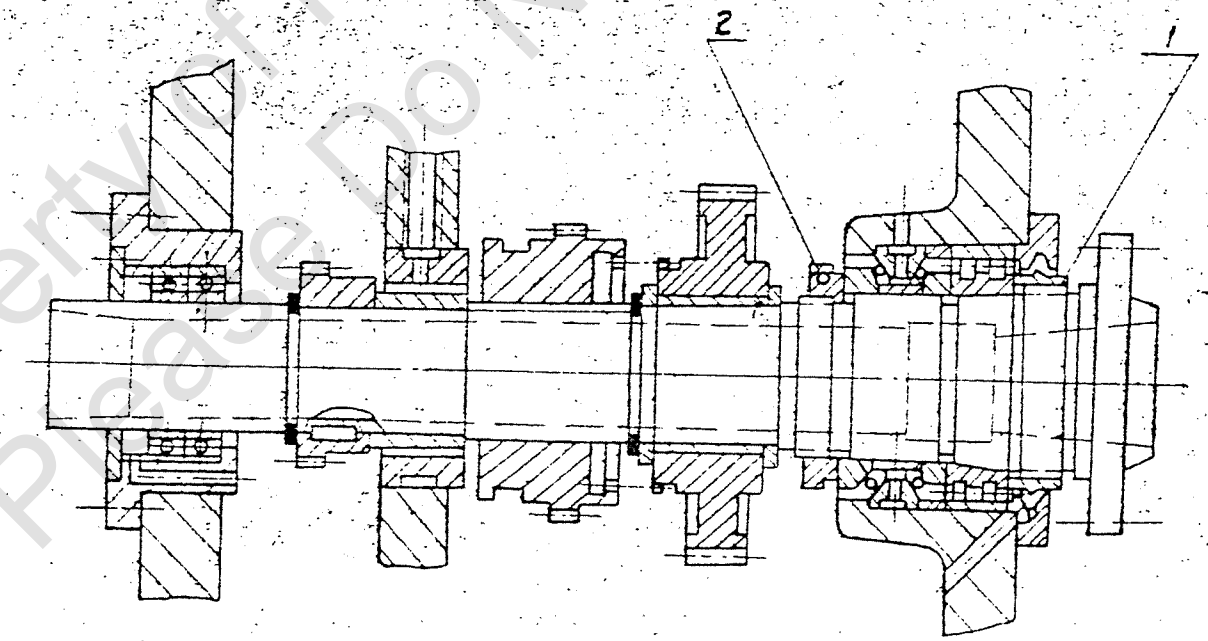

Fig. 6 Spindle Structure

Property of Kent Industrial USA
Please Do Not Reproduce

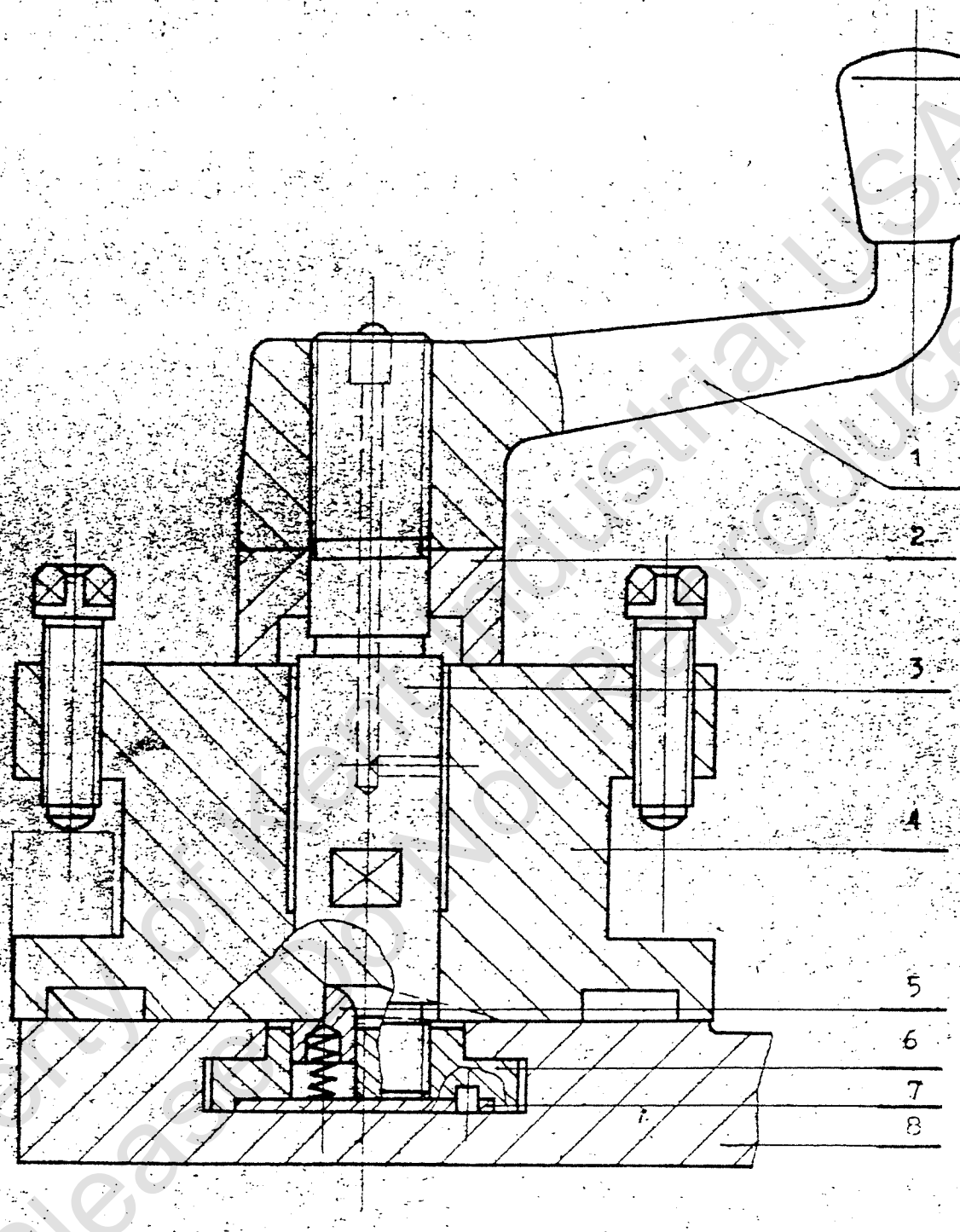

Fig. 7 Structure of tool post

Property of Kelly Industrial USA
Please Do Not Reproduce

7.2.2 Adjustment of Tool Post

Shaft 3, locking block 6 and plate 7 are fixed in tool post body 8 by screws. Turn counter-clockwise lever 1 to loosen the tool post 4 and then turn the tool post counter-clockwise by hand to make locating pin 5 indexed. After the tool post 4 having reached required position locating pin 5 comes out, turn clockwise the tool post to make it positioned. After the tool post positioned, turn lever 1 clockwise and lock tool post 4 on body 8 by means of thread bush 2 (see Fig. 7).

Property of Kent Industrial USA
Please Do Not Reproduce

7.4.3 Adjustment of Overload Safety Clutch

The power of the apron is transmitted to over-clutch 5 by the gear 2 (Fig. 8) through the roller 3 and to the coupler 4 of the safety clutch through the plain key [illegible], and by means of the coupler 4, power is transmitted to the coupler 7 which is pressed on by the spring 8.

When turning against force is over given force, due to torque is too strong, the spring 8 suffered from pressure of the part 7 is compressed to make the cam unengaging. If the safety clutch is too loose, may adjust the nut 1 to increase pressure of the spring 8 until it gets requirement.

When the motor, which is for the apron's rapid traveling, starts this clutch is also used as overrunning clutch.

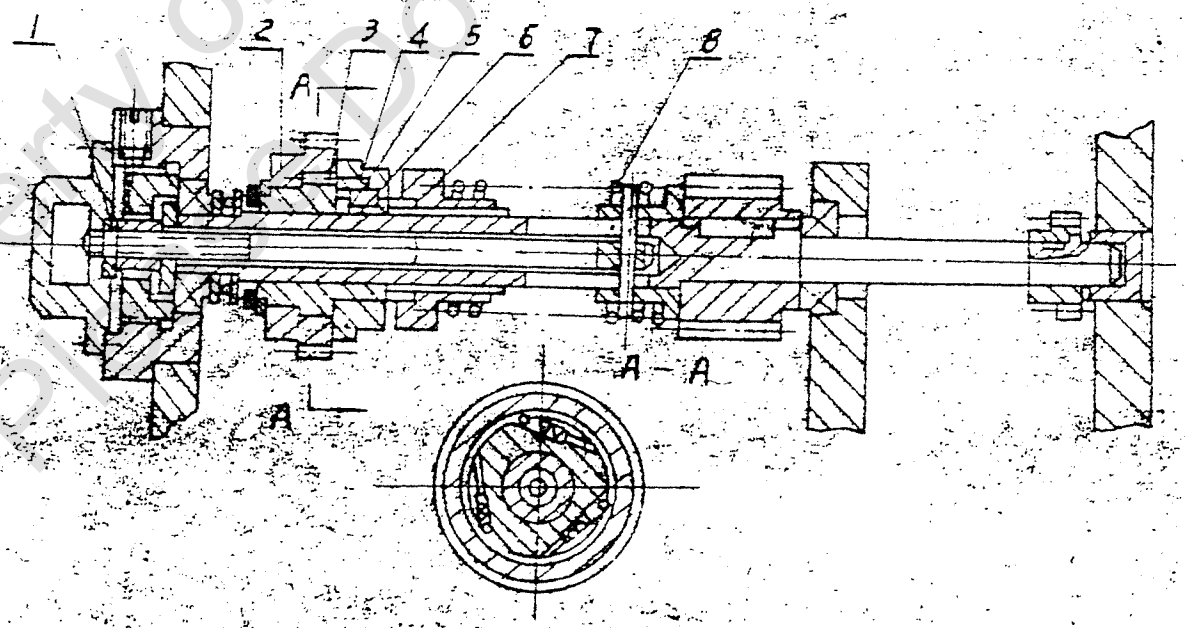

Fig. 8 Overload safety clutch

Property of Client In Malaysia
Do Not Reproduce

7.2.4 Adjustment of Chain Wheel

The changing speed mechanism, which is set in the headstock, is transmitted by a spocket chain. If the chain is under loose condition, it is not exact that position for changing speed used, thus, use following method to adjust: First, loosen the screw 2, and turn the shaft 1 to centain tightness of the sprocket chain to make the indicating pointer of the spindle changing handle to desired position, then, screw the screw 2 to make the steel ball 3 puch against the steel ball 4, so that the balls 4 are clipped on the inter wall of the hole on the headstock wall. (see Fig. 9)

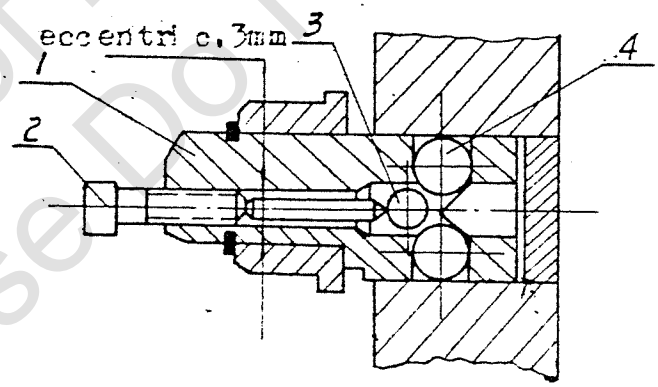

Fig. 9 Adjusting mechanism of sprocket chain

Property of Kent Industrial USA
Please Do Not Reproduce

7.2.5 Adjustment of Carriage

Clearance between cross slide and its guideways and that between compound rest and guideways are adjusted by gibs through screws respectively. In case of backlash of cross slide leadscrew resulting from wear of adjustable nuts 1 and 4, loosen screw 5 on the nuts and draw up wedge 2 with screw 3 until the backlash is eliminated, then tighten the screws 5 (Fig. 10) to make the nut fixed.

7.2.6 A limit touch-stop device is fitted in the apron. The touch-stop ring is fixed on a position of the reverse rod, at which the tool post may not touch the chuck.

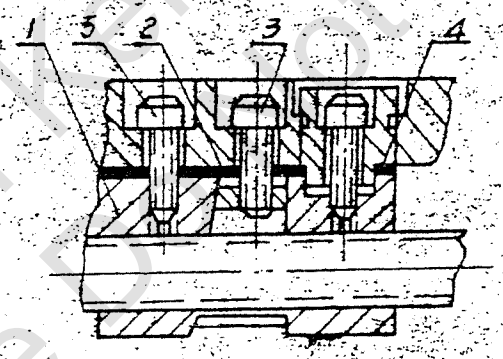

Fig. 10 Adjustment of nut

7.2.7 Adjustment of Motor Belt Tension

Main drive motor is mounted in the lathe leg. Dismantle the cover at the front of the lathe leg, the belt tension can be adjusted by changing the inclination of the motor base plate through nuts. The belt tension of motor depends on the distance between the center of motor pulley and that of the pulley of headstock.

Property of Kent Industrial USA
Please Do Not Reproduce

7.2.8 Mount Dismount Chuck and Drive Plate

Type C spindle nose. Chuck is mounted on the chuck base. Tighten 4 screws 2 on the chuck base or drive plate body 1. (The methods of mounting and dismounting chuck and drive plate are the same.) The nut 3 is screwed on the screw 2. When installing, let the screw 2 through 4 cylindrical holes of the spindle shoulder and ring 4, and then turn the round ring 4 to a angle to make the screw be in the channel of the round ring, next, even screw up the 3. The installation can be completed. If diamount them, loosen the nut 3 and turn the ring 4 to a angle to make its hole align the screw 2, thus, the drive plate or chuck are dismounted with screw 2 and the nut 3 together. If chuck or drive plate are not used, screw up 2 screws 6 of M10 to make the ring 4 be fixed on the spindle shoulder (Fig. 11).

Type D spindle nose. Chuck is mounted on the chuck base. 6 locking rods 2 are screwed on the chuck base or drive plate base (the methods of mounting and dismounting chuck and drive plate are the same.). There are 6 locking blocks 1 within the spindle shoulder. When mounting 6 locking rods are inserted into 6 holes 3 on the spindle to make their contact surfaces close against each other. Turn locking block 1 swinging 90° with square-head spanner (graduation marks are on the spindle and locking block.), and make its cylindrical part rotating into the concave of the locking rod. 6 locking rods must be swung 90° one by one. When dismounting, only turn rapidly the locking block reversely to make its graduation mark align with that of the spindle. (Fig. 12)

Property of Kent International USA
Please Do Not Remove

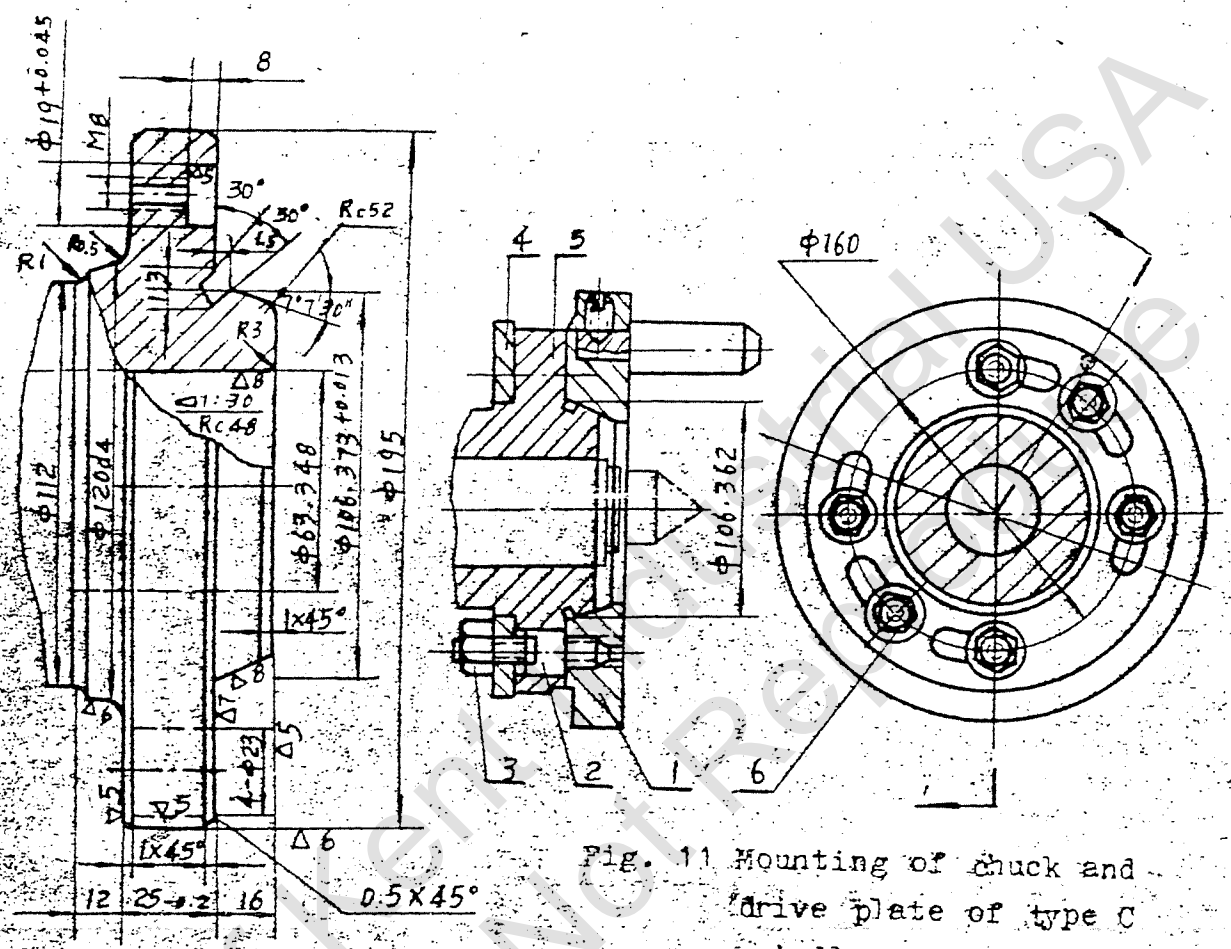

Fig. 11 Mounting of chuck and drive plate of type C spindle nose and spindle structure

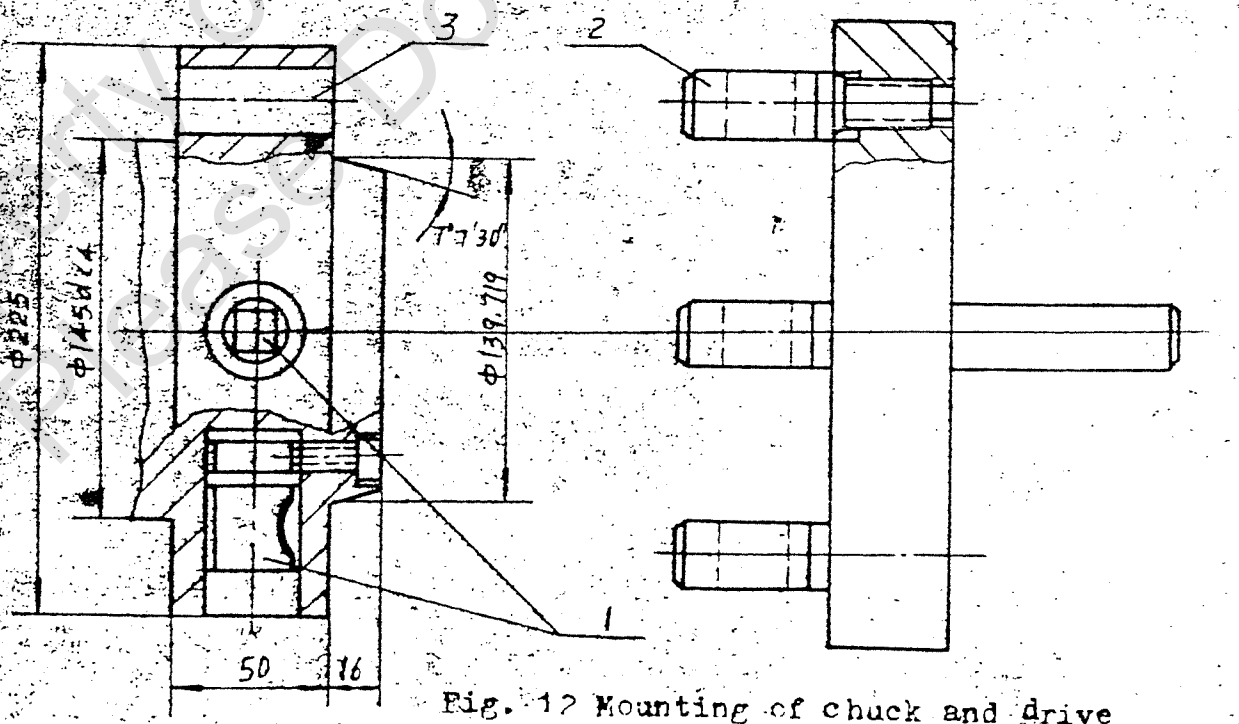

Fig. 12 Mounting of chuck and drive plate of type D Spindle nose and spindle structure

Property of Lenk Industrial USA
Please Do Not Reproduce

8. Ball and Roller Bearings

Ball and Roller Bearings

Type No.	Accuracy Grade	Size	Qty.	Location	Remarks
Single row centripetal ball bearing					
104	G	20x42x12	2	Apron	
105	G	25x47x12	4	Apron	
106	G	30x55x13	3	Feed box	
108	G	40x68x15	2	Headstock	
111	G	55x90x18	2	Headstock	
202	G	15x35x11	2	Apron	Mounted in the car
203	G	17x40x12	2	Feed box	
204	G	20x47x14	2	Headstock	
205	G	25x52x15	3	Feed box	
206	G	30x62x16	2	Head stock	
207	G	35x72x17	1	Headstock	
304	G	20x52x15	1	Headstock	
308	G	40x90x23	1	Headstock	
7000105	G	25x47x8	6	Apron	
1000918	D	90x125x18	2	Headstock	
7203	G	17x40x135	6	Feed box	
7204	G	20x47x155	1	Feed box	
7204	G	20x47x155	1	Apron	
7204	G	20x47x155	1	Headstock	

Property of Rem Industrial USA
Please Do Not Reproduce

7205	G	25x52x16.5	1	Headstock	
7205	G	25x52x16.5	1	Apron	
7306	G	30x62x17.5	1	Feed box	
7306	G	30x72x21	1	Headstock	
7307	G	35x80x23	2	Headstock	
7506	G	30x62x21.5	2	Headstock	
7507	G	35x72x24.5	1	Headstock	
Single thrust ball bearing					
8106	D	30x47x11	2	Feed box	
8106	G	30x47x11	1	Apron	
8205	G	25x47x15	1	Tailstock	
8103	G	17x30x9	2	Carriage	
Double row centripetal short cylindrical roller bearing					
3182121	1D	105x160x41	1	Headstock	
Double row centripetal thrust ball bearing					
2268121	D	105x160x66	1	Headstock	

KLS
XL

Property of Vent Industrial USA
Please Do Not Reproduce

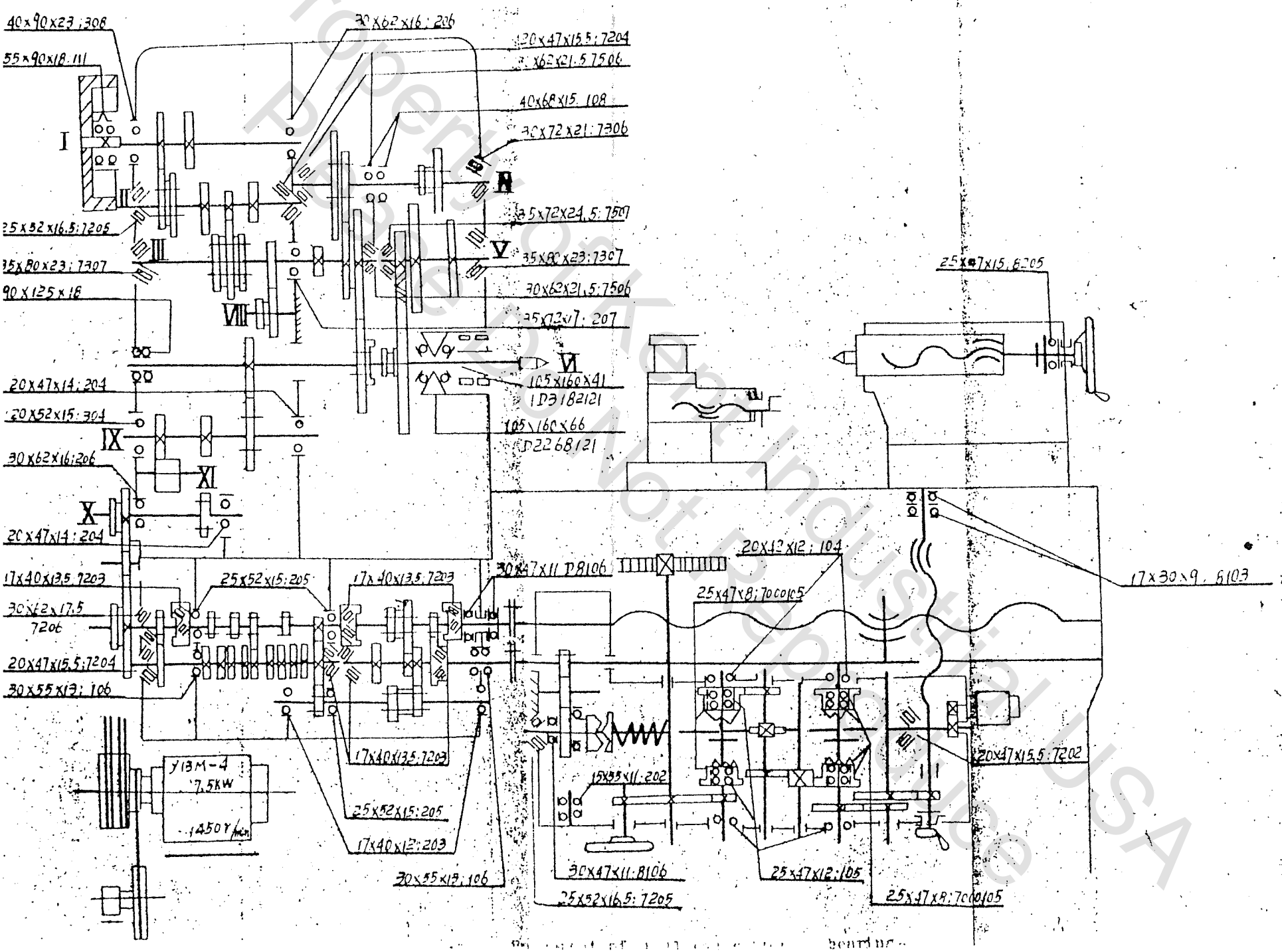

Property of Kent Industrial USA
Please Do Not Reproduce

9. List of Wearing Parts and Their Drawings

List of Wearing Parts

No. of Fig.	Part Name	Part Number	Material	Qty.	Remarks
14	Bush	CA6140 02069	ZQSn 6-6-3	1	
15	Feed screw	CA6140 0193540L	Y40Mn	1	Swing dia. of 61 mm, CA6261B-019379C
16	Nut	CA6240B 05012	ZQSn 6-6-3	1	
17	Nut	CA6240B 05013	-do-	1	
18	Worm wheel	CA6140 06033A	HT10-26	1	
19	Split nut	CA6240B 06017	ZQSn 6-6-3	1	
20	Bush	CA6140 08013	Wear resistant castiron, G. II	1	
21	Center	II 5 S25-2	T8A	2	
22	Center sleeve	CA6140D-0190180L	40Cr	1	
23	Square head screw	M16X50GB83-66	Steel 45	8	
24	Nut	CA6261B 05025	ZQSn 6-6-3	1	Δ
25	Nut	CA6261B 05024	-do-	1	Δ
26	Friction band	CA6140-0194150L	Phenolic asbestos brake band	2	

Property of Kent Industrial USA
Please Do Not Reproduce

Unless otherwise specified ▽4

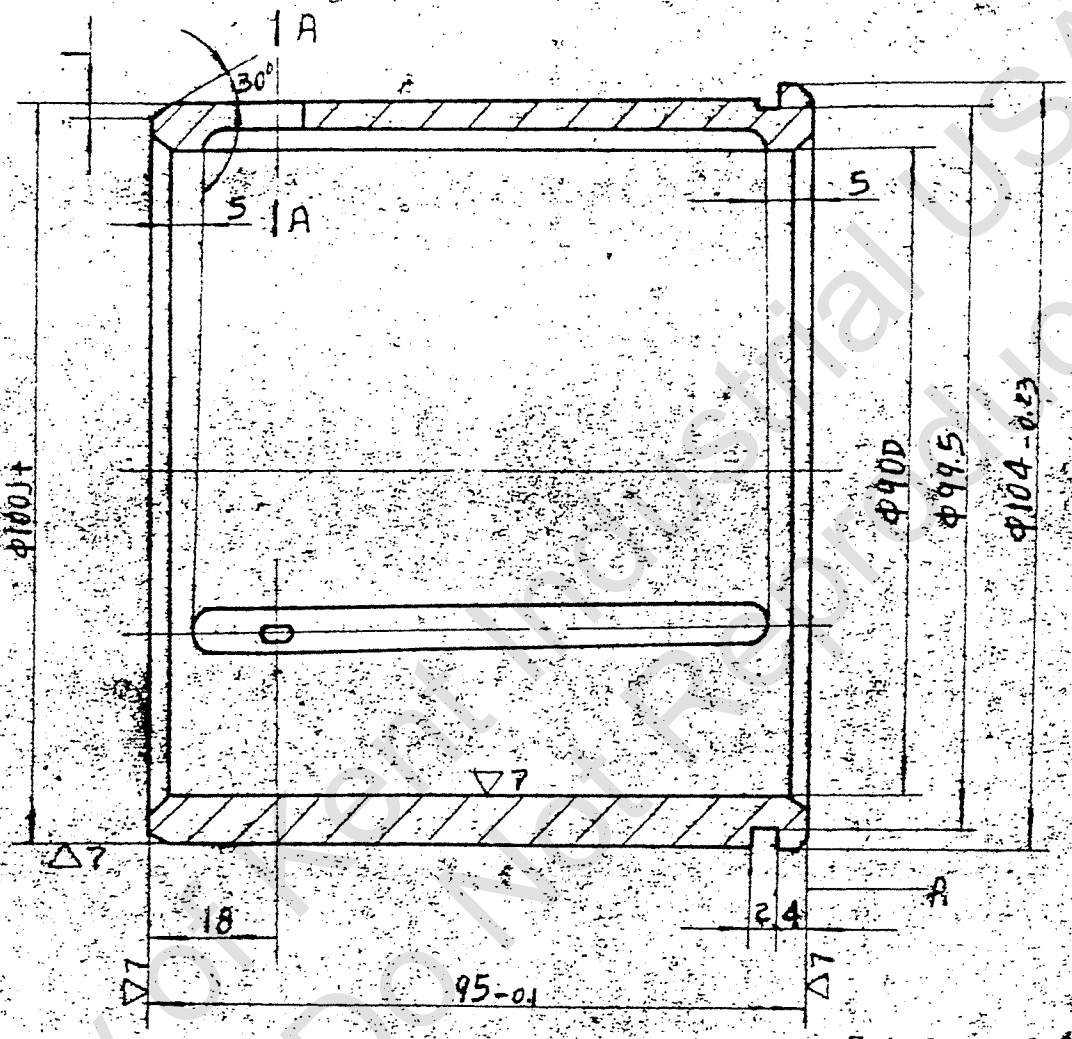

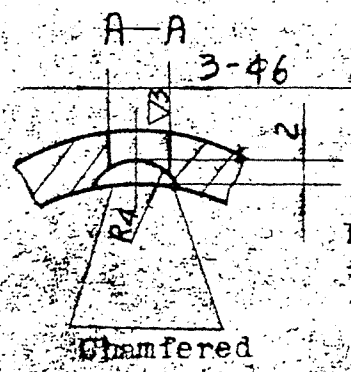

3 holes of Ø6 should be drilled with piece of 02070 together and distributed uniformly

Scale 1 : 1
Matl. 40Sn 6-6-3
H.T.

Item	Technical requirements	Permissible error
1	run-out of the surface A to the hole of Ø90D after the piece of 02070 is pressed in.	0.03 mm
2	After the 02070 pressed in, the size of the Ø90D must be still kept accurany.	
3	Run-out of the center line of the of Ø90D to hole of Ø100Jf	0.03 mm

Fig. 14 Bush (C46140-02069)

Property of Rent Industrial USA
Please DO NOT Reproduce

Unless otherwise specified ▽4

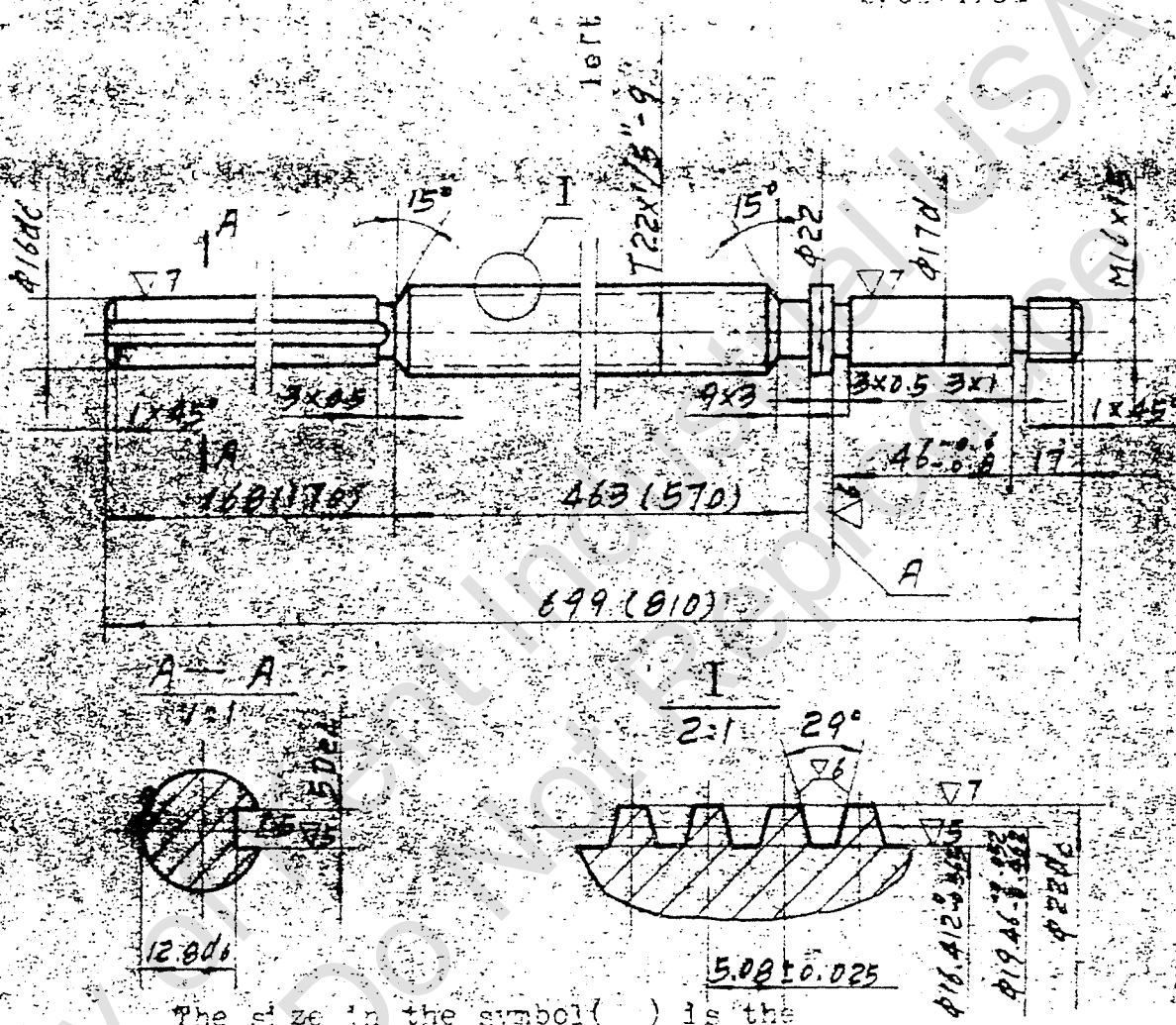

The size in the symbol( ) is the size for lathe of CA6261B-C1937901.

Scale 1 : 2
Metl. Y40Mn
H.T.

Item	Technical requirements	Permissible error
1	Run-out of Φ22dc, Φ16dc and Φ17dc to the axis	0.03 mm
2	Bend deviation of leadscrew after cut threads should not be more than	0.1 mm (ring gauge)
3	Max. accumulative pitch error	
	Single pitch	±0.025 mm
	a. in 25 mm long	0.035 mm
	b. in 100 mm long	0.050 mm
	c. in 300 mm long	0.070 mm
	d. in full length	0.150 mm
4	Run-out of face A to the axis of the leadscrew should not be more than	0.015 mm
5	Parallelism in groove length of the side of key way to radial axis	0.1 mm
6	Symmetry of the groove of the key way in relation to plane through axis of leadscrew	0.1 mm

Property of Hunt Industrial USA
Please do not duplicate

Unless otherwise specified

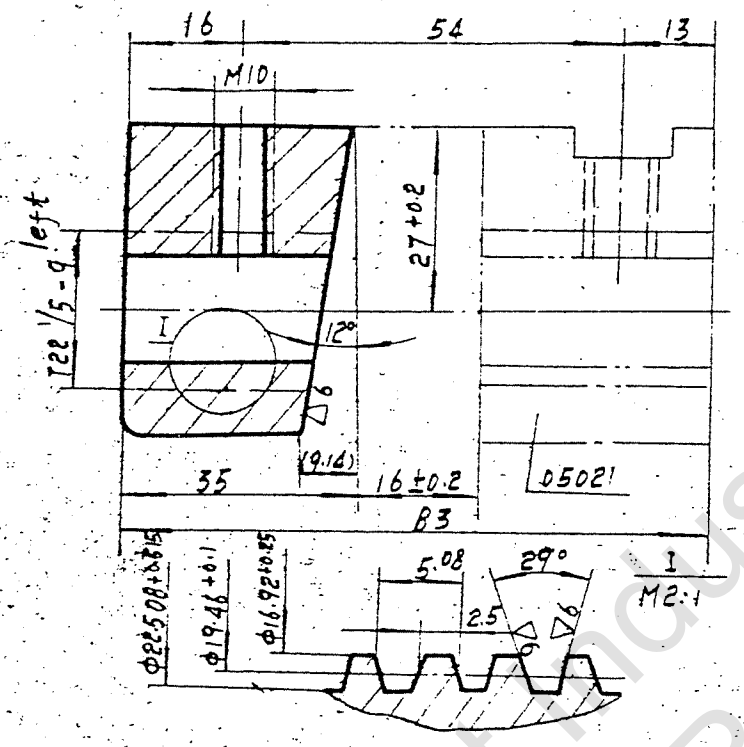

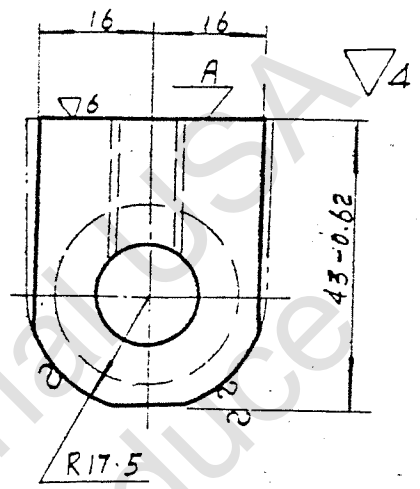

Casted with the piece of 05013 as one body and then machine it, last cut off it.

Casting fillet without indicated size R = 3 - 5

Scale 1 : 1

Matl. 4QSn 6-6-3

H.T.

Item	Technical requirements	Permissible error
1	Surface "A" parallel with center line of trapezoidal thread	0.1 mm/90 mm

Fig. 16 Nut (CA6240B-05012)

Property of Kent Industrial USA
Please Do Not Reproduce

Unless otherwise specifie

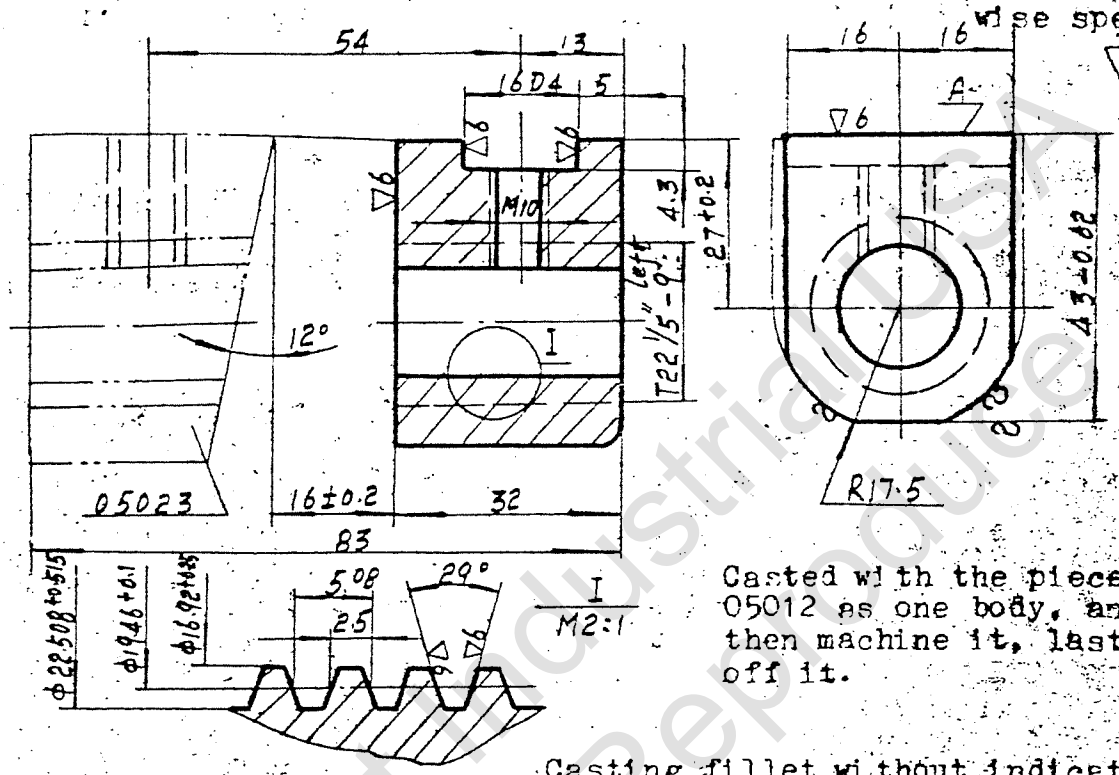

Scale 1 : 1

Matl. 2QSn 6-6-3

H.T.

Item	Technical requirements	Permissible error
1	Surface "A" parallel with axis of center line of trapezoidal thread	0.1 mm/ 90 mm

Fig. 17 Nut (CA6240B-05013)

Property of Kent Industrial USA
Please Do Not Reproduce

Unless otherwise specified ▽4

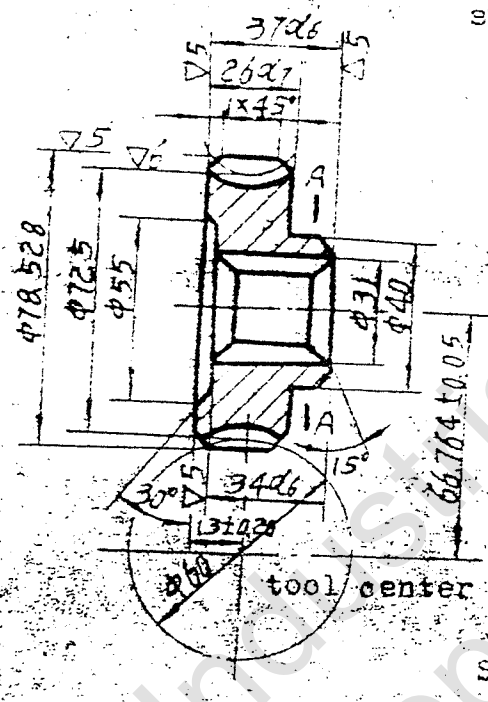

ξ = 0.205,

Hardness HB 150-190

Scale 1 : 2

Metl. HT 10-26

H.T.

Technical requirements

1. No. of teeth 29
2. Accuracy Grade III
3. Technical data of worm
   - No. of thread end 4
   - Helix angle 9°27'42"
   - Helix direction right hand
   - Lead 31.416 mm
   - Out diameter 65 mm
   - Axial module 25
4. Run-out of pitch cone 0.08 mm
5. Permissible error of center distance between worm wheel and milling cutter in milling operation -0.10 mm -0.16 mm
6. Run-out: A 0.14 mm
   Permissible error B 0.05 mm
7. Bearing of wheel teeth tested by red lead method:
   - Profile bearing 60%
   - Lengthwise 55%
8. Hardness HB 150-190
9. Fitting 061074

Others. Chamfered 0.5 X 45°

Fig. 10 Worm wheel (CA6140-06033A)

Property of Kent Industrial USA
Please Do Not Reproduce

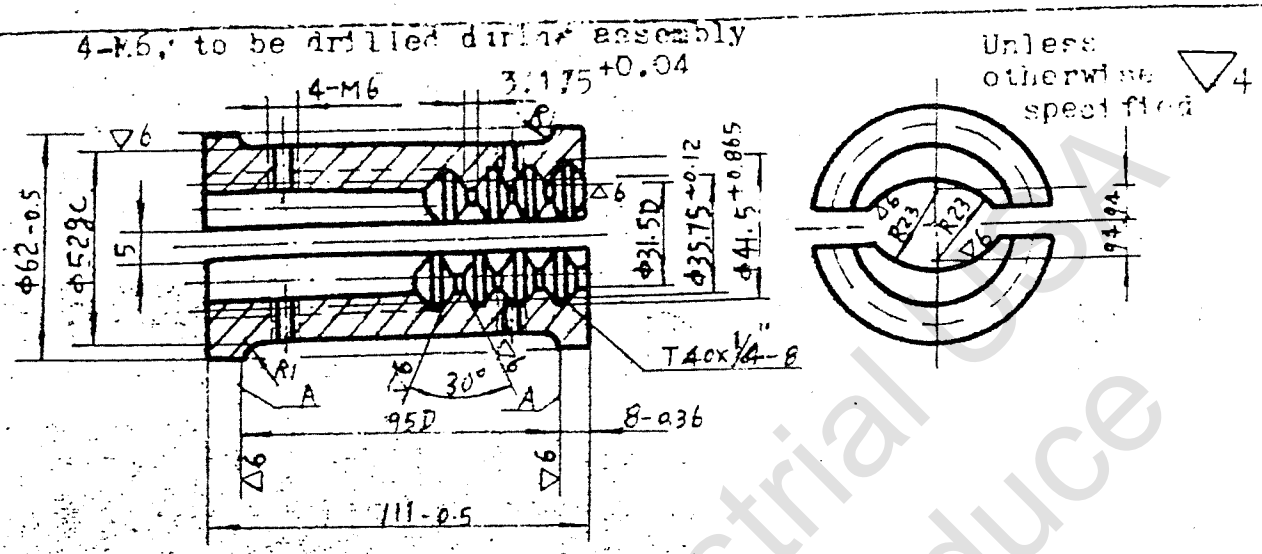

Scale 1 : 2

Metl. ZQSn 6-6-3

H.T.

Item	Technical requirements	Permissible error
1	Both faces "A" run-out in relation to axis of Ø52gc	0.03 mm
2	Run-out of Ø52gc to Ø35.75 +0.12	0.03 mm
3	Ø52gc surface run-out in reletion to axis of bore of Ø31.5 D.	0.03 mm

Fig. 19 Split nut (CA6240B-06017)

Property of Kent Industrial USA
Please Do Not Reproduce

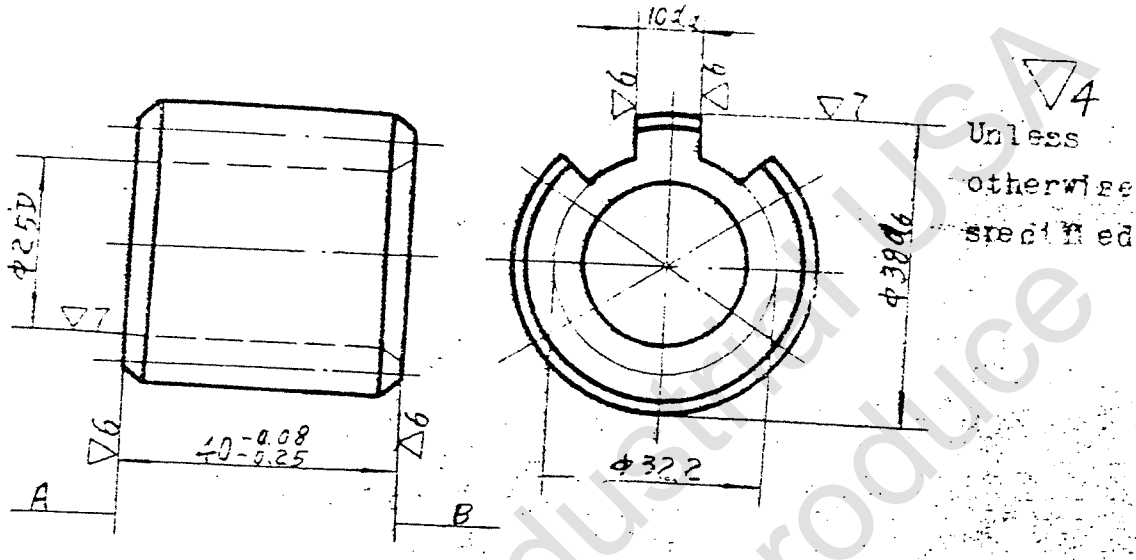

All chamfered angles: 1 X 45°

Scale 1 : 1

Matl. Wear resistant cast iron Grade II

H.T.

Item	Technical requirements	Permissible error
1	Run-out of Ø38db in relation to axis of 25D	0.02 mm
2	Run-out of both end faces A and B to Ø25D	0.03 mm
3	Unequally accumulated error of spline and displacement of the spline in relation to plane through axis of Ø38db	0.02 mm

Fig. 20 Bush (CA6140-08013)

Property of Kent Industrial USA
Please Do Not Reproduce

Unless otherwise specified

Morse No. 5

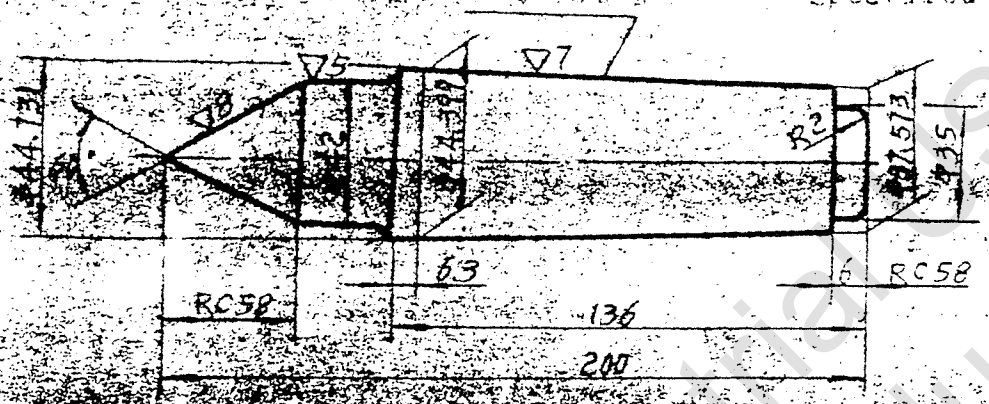

Scale 1 : 2

Cat. T8A

H.T. Local C52

Item	Technical requirements	Permissible error
1	Run-out of 60° cone in relation to axis of cone of Morse No. 5	0.005 mm
2	Angle of cone 60°	$^{+}_{-}10'$
3	When check morse cone with painting method, coloured bearing should be uniformly ranged on the cone surface and touching surface is allowed to near to larger end and less than 60% of working length.	

Fig. 21 Center (M 5 825-2)

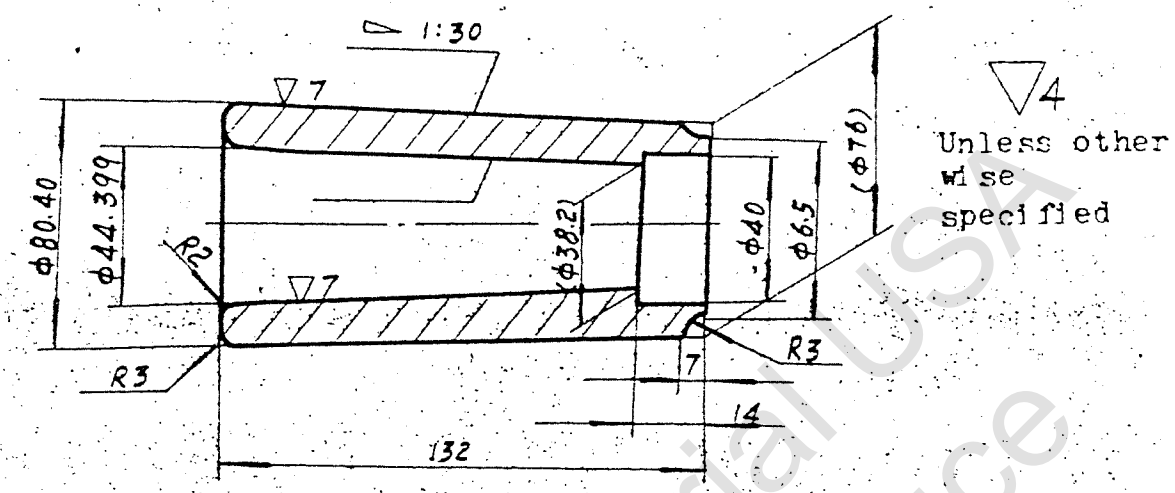

Scale 1 : 2
Matl. 40Cr
H.T. C48

Item	Technical requirements	Permissible error
1	Conventricity of internal cone in relation axis of external cone	0.007 mm
2	When check Morse cone with painting method, coloured bearings should be uniformely ranged on the cone surface, and touching surface is allowed to near to larger end and not less than 70% of working length.	

Fig. 22 Center bush (CA6140D 0190180L)

Property of Kent Industrial USA
Please Do Not Reproduce

Unless otherwise specified ▽4

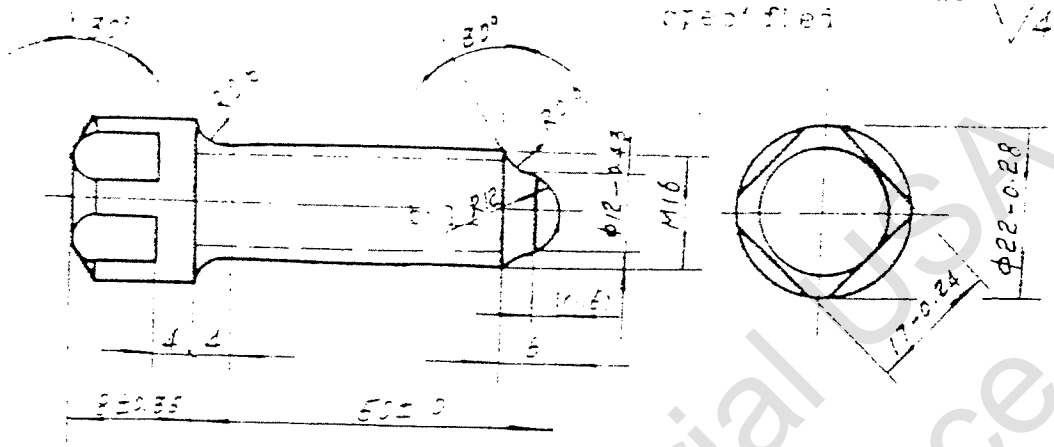

Scale 1 : 1

Matl. steel 45

H.T.

Item	Technical requirements	Permissible error
1.	Oxidizing	
2.	The thread part of bolt machined according to the standard GB89-67	

Fig. 23 Square head screw (M16 X 50 GB83-65)

Property of Kent Industrial USA
Please Do Not Reproduce

Unless otherwise specified ▽4

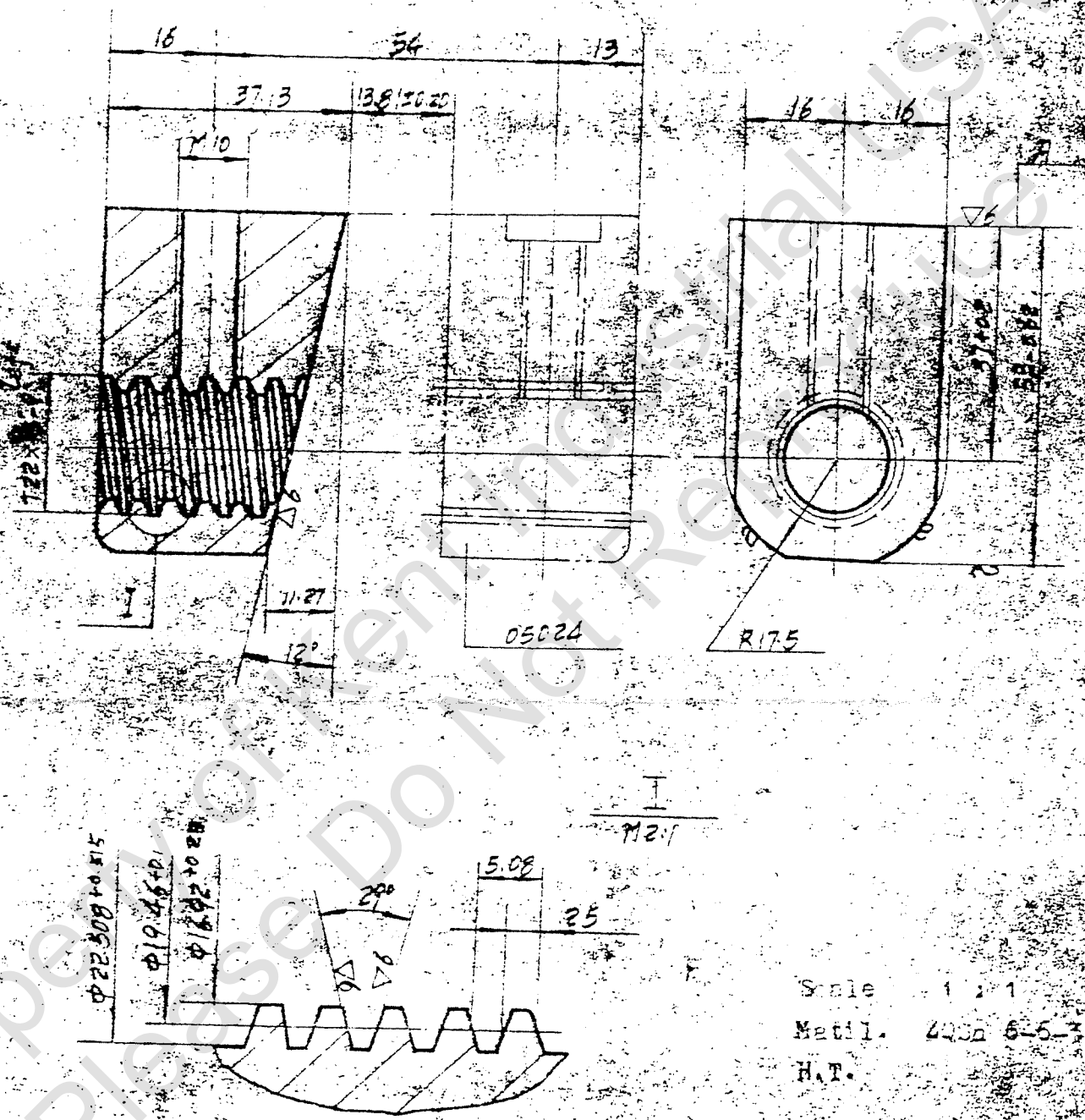

Scale 1 : 1
Metil. 40Cr 6-5-7
H.T.

Item	Technical requirements	Permissible error
1.	Surface A parallel with center line of trapezoidal thread	0.1 mm/90 mm
2.	Casted with the piece of 05024 as one body, and then machine it, last, cut off it.	

Fig. 24 [illegible]

Property of Kent State University
Please Do Not Remove

Unless otherwise specified ▽4

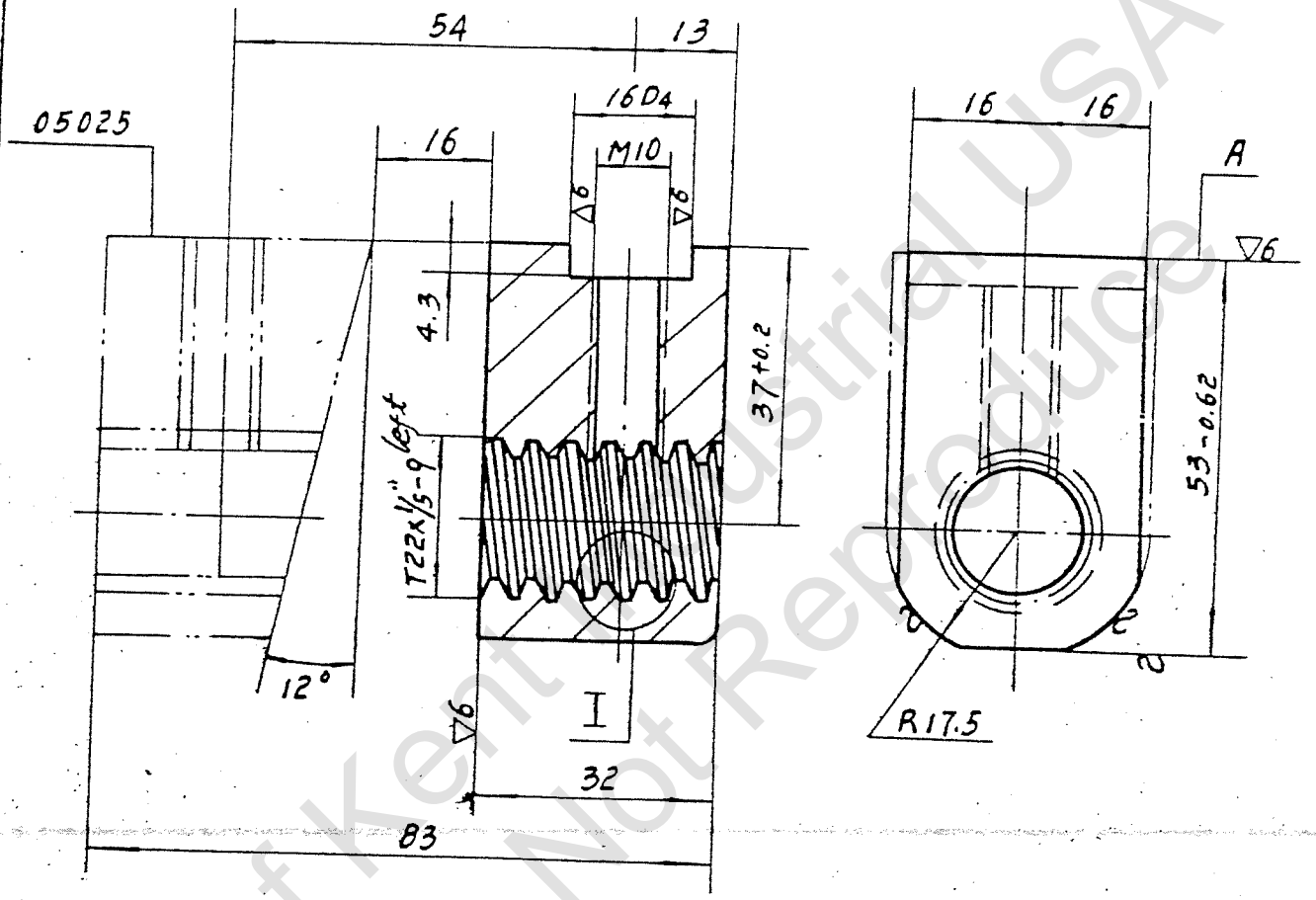

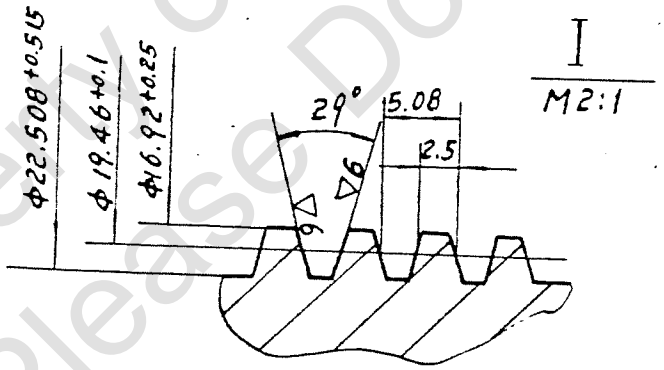

Casting fillet without indicated sizes: R2-5

Scale 1 : 1

Matl. ZQSn 6-6-3

H. T.

Item	Technical requirements	Permissible error
1.	Surface A parallel with center line of trapzoidal threads	0.1 mm/90 mm
2.	Casted with the piece of 05025 as one body, and then machine it, last, cut off it.	

Property of Kent Industrial USA
Please Do Not Reproduce

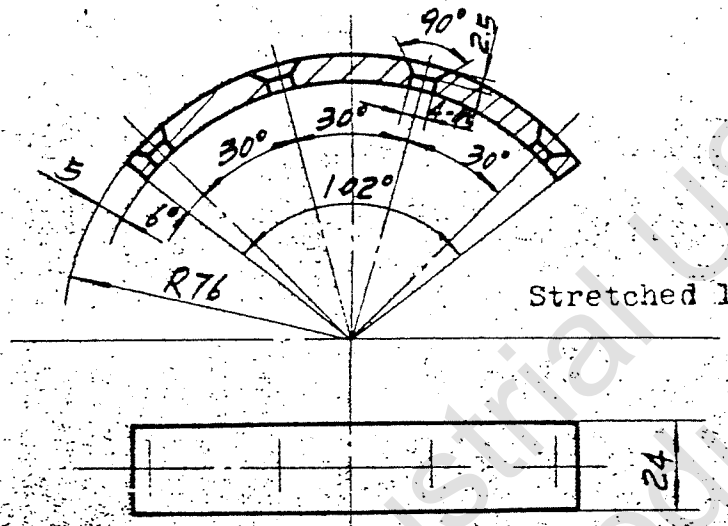

Stretched length: 135

Scale 1 : 1

Material Phenolic asbestos

Fig. 26 Friction band (CA6140-019415OL)

Property of Kent Industrial USA
Please Do Not Reproduce

Index of Technical Document

No.	Name	Code	Page	Remarks
1	Mounted position of component and Index of document	=A0	51	
2	Operating description of electrical system of the machine	=A3	52	
3	Electrical principle diagram	=X1	54	
4	List of electrical elements	=A4	55	
5	Arrangement diagram for distribution switchboard	=A2	67	
6	Connecting wires diagram for distribution switchboard	=B2	68	
7	Installing diagram of electrical system	=A1	69	
8	Connecting wires diagram of electrical system of the machine	=B1	70	
9	Connecting wires diagram of motor	=B3	71	

Index of Position and Code

No.	Name of Component	Code	Located Electrical Elements
1	Bed base	+M01	-M3, -SA5, -YT1, -XT2 -SQ1, -XP, -XS -M1 -YT5, -SA2, -SQ3, SQ4 -SQ5.
2	Carriage	+M05	-XT3, -EL, -HL, -SA3
3	Apron	+M06	-M2, -SB2
4	Belt cover	+M15	-QF, -SA1, -SA4, -SQ2
5	Headstock	+M02	-YC

Property of Kent Industrial USA
Please Do Not Reproduce

Operating description of electrical system of the machine

Voltage and frequency of power supply used for this machine depend on user's velevant contract. User should fit a suitable fuse on the power supply. The power supply is led into the machine through automatic switch -QF. -A control panel of the machine is mounted whithin niche in the rear of the bed under the headstock-.

Before starting the machine, first, use the key-switch to turn right-SA4 mounted on the front side of change gear guard on the headstock, and then shift-QF above it to position 1 to turn on the power supply, at this time, lubricating pump is started to lubricate the headstock and show oil flow, which can be observed from the oil window. During operation, shift the operating lever up, the spindle revolves on forward and shift it down, the spindle reversely. And turn the-SA1 on the face of the front cover, cooling starts. After work, shift the lever to the neutal position, the spindle can be automatically braked by a braking clutch. If it is needed to stop during the machine working foot the foot-pedal brake and the - SA2(SA5)can be actuated to make the spindle be stopped and braked. Selecting the SA3 on the carriage can check if the braking clutch has function. But foot once the foot-pedal brake braking function must be obtained regardless of state of -SA3. When the machine is under working state, pushing down the mushroom button-SB1 can stop the main motor. After this button is pressed, it is automatically locked until it is right turned.

In case the operating lever of the automatic switch is at the neutral position, if it is neended to switch on, first, it is necessary to shift it down to position OFF to make operating mechanism return to its original position, then switch it on.

Rapid traverse button-SB2 is set in the end of the joystick, mounted on the apron, rapid and slow feeding shift the joysbick to required

Property of Kent Industrial USA
Please Do Not Reproduce

direction, and then, pressing the button, do ontain rapid traverse in required direction.

Control voltage of the machine is designed as A.C.110V, the voltage of signal lamp A.C.6V. But we can meet the needs of lighting voltage of A.C.110V, or A.C. 24V. The machine must have a good ground,

When turn the -SA4 right and lock it or open the niche door of the distribution switchboard to maintain the machine, -SQ1 is under closing state and-QF switches off automatically. -QF will automatically switch off again within 0.1 seconds even though switching on is wrong done. When opening the belt guard, -SQ2 is cut off to make the main motor stop so as to ensure relevant person agianst danger.

KLS
XL

Property of Kent Industrial USA
Please Do Not Reproduce

Basic Elements

Code	Name	Type	Specification	Qty.	Application
-KT1	Time relay	SCFXF902A	0.33-10S	1	For starting main motor
-KT2	Time relay	-do-	-do-	1	For control of braking time
-R	Resistor	RT-0.5	27Ω	1	For discharg of electro-magnet
-SQ1	Stroke switch	JWM6-11TH		1	Cut off powe supply when niche door opened
-SQ2	-do-	-do-		1	Cut off powe supply when belt cover opened
-SB2	Push button	LA9TH		1	For control of rapid traverse motor
-SA1	Knob	LAY3-10X/2TH		1	For control of coolant pump
-SA3	Knob	-do-		1	For selectio of braking
-SB1	Push button	LAY3-01ZS/1TH		1	For emergenc stop
-SA4	Key-knob	LAY3-01Y/2TH		1	For supplyi electricity of the mach-ine
-HL	Signal lamp	ZSD-0TH	6V	1	For lightin of the scale ring
-V1-V4	Rectifying diode	2CZ-13	100V.5A	4	Used as rect ifying of power supply of electro-magnet
-V5	Diode	2CP33	100V,500mA	1	For discharg ing of ele-ctromagnet
-FU3	Fuse-core	BZ-001A TH	3A	1	For preventing control circuit fro short-circu

Property of Hartford Industrial Use
Please Do Not Reproduce

Code	Name	Type	Specification	Qty.	Applicatio
-FU4	Fuse core	BZ-001A TH	2A	1	For prevent ing lightin circuit from short circuit
-FU5	-do-	-do-	1A	1	For prevent ing circuit of signal lamp from short-circu
-FU6	-do-	-do-	4A	1	For prevent ing braking electromagn from short-circuit
-XP	Plug	P20J6S		1	Used as plu of power cable of coolant pu
-XS	Socket	P20K6A			Used as soc et of power cable of co ant pump

Property of Kent Industrial USA
Please Do Not Reproduce

220V, 50Hz (60Hz), Lighting Voltage 24V(110V)

Code	Name	Type	Specifications	Qty.	Application
-QF	Automatic switch	AM1 - 30 TH	30A	1	For lead in of power supply
-KM1	Contactor	3TB4417-0AG1	110V.50Hz/60Hz	1	Makes main motor rotate forward
-KM2	-do-	3TB4417-0AG1	-do-	1	Makes main motor rotate reverse
-KM4	-do-	3TB4417-0AG1	-do-	1	Used for Δ-connection of main motor
-KM3	-do-	3TB4217-0AG1	-do-	1	Used for Y-connection of main motor
-KM5	-do-	3TB4010-0AG1	-do-	1	For controlling rapid traverse motor
-KM6	-do-	3TB4010-0AG1	-do-	1	For control of lubricating pump
-KM7	-do-	3TB4010-0AG1	-do-	1	For control of coolant pump
-FR1	Thermorelay	3UA5400-2D	26.6A	1	For preventing main motor from overheat
-FR2	-do-	3UA5000-0J	0.78A	1	For preventing lubricating pump from overheat
-FR3	-do-	3UA5000-0G	0.56A	1	For preventing coolant pump from overheat
-FU1	Fuse	BZ-001A TH	6A	3	For protection of short-circuit
-FU2	-do-	-do-	-do-	3	For preventing rapid traverse motor from short-circuit
-M1	Main motor	Y132M-4B3 TH	7.5 kW	1	Used as power source of spindle

Property of Kent Industrial USA
Please Do Not Reproduce

220V,50Hz (60Hz).Lighting Voltage 24V(110V)

Code	Name	Type	Specifications	Qty.	Application
-M3	Lubricating pump	A05624 TH	120W	1	For lubrication of head stock
-M2	Rapid traverse motor	A0S5634 TH	250W	1	For rapid traversing of apron
-M4	Coolant pump	A0B-25 TH	90W	1	For cooling during machining
-TC	Control transformer	JBK2-250 TH 220/110/24/28/6V	110V115VA, 24V60VA 28V70VA	1	Used for power supply of control circuit when lighting voltage is 24V.
-TC	Control transformer	JBK2-250 TH 220/110/110/28/6V	110V 115VA 110V 60VA 28V 70VA	1	Used for power supply of control circuit when lighting voltage is 110V.
-EL	Working lamp	JC TH	40W	1	For lighting power of 40.
-EL	-do-	JC TH	60W	1	For lighting power of 60

Property of Kent Industrial USA
Please Do Not Reproduce

380V 50Hz (60Hz) Lighting Voltage 24V (110V)

Code	Name	Type	Specifications	Qty.	Application
-QF	Automatic switch	AM1 - 30 TH	30A	1	For lead-in of power supply
-KM1	Contactor	3TB4417-0AG1	110V.50Hz/60Hz	1	Makes main motor rotate forward
-KM2	-do-	3TB4417-0AG1	-do-	1	Makes main motor rotate reverse
-KM4	-do-	3TB4417-0AG1	-do-	1	Used for Δ-connection of main motor
-KM3	-do-	3TB4217-0AG1	-do-	1	Used for Y-connection of main motor
-KM5	-do-	3TB4010-0AG1	-do-	1	For controlling rapid traverse motor
-Km6	-do-	3TB4010-0AG1	-do-	1	For control of lubricating pump
-KM7	-do-	3TB4010-0AG1	-do-	1	For control of coolant pump
-FR1	Thermorelay	3UA5400-2D	26.6A	1	For preventing main motor from overheat
-FR2	-do-	3UA5000-0J	0.78A	1	For preventing lubricating pump from overheat
-FR3	-do-	3UA5000-0G	0.56A	1	For preventing coolant pump from overheat
-FU1	Fuse	BZ-001A TH	6A	3	For protection of short-circuit
-FU2	-do-	-do-	-do-	3	For preventing rapid traverse motor from short-circuit
-M1	Main motor	Y132M-4B3 TH	7.5 kW	1	Used as power source of spindle

Property of Fanuc Industrial USA
Please Do Not Reproduce

380V 50Hz (60Hz) Lighting Voltage 24V (110V)

Code	Name	Type	Specifications	Qty.	Application
-M3	Lubricating pump	A05624 TH	120W	1	For lubricati of headstock
-M2	Rapid traverse motor	A0S5634 TH	250W	1	For rapid travesing of apron
-M4	Coolant pump	A0B-25 TH	90W	1	For cooling t ing machinin
-TC	Control transformer	JBK2-250 TH 380/110/24/ 28/6V	110V 115VA 110V 60VA 28V 70VA	1	Used for powe supply of con trol circuit when lighting voltage is 24
-TC	Control transformer	JBK2-250 TH 380/110/110/ 28/6V	110V 115VA 110V 60VA 28V 70VA	1	Used for powe supply of con trol circuit when lighting voltage is 110V.
-EL	Working lamp	JC TH	40W	1	For lighting power of 40W.
-EL	-do-	JC TH	60W	1	For lighting power of 60W.

Property of Kent Industrial USA
Please Do Not Reproduce

420V 50Hz (60Hz) Lighting Voltage 24V (110V)

Code	Name	Type	Specifications	Qty.	Application
-QF	Automatic switch	AM1-30 4H	30A	1	For lead in of power supply
-KM1	Contactor	3TB4417-0AG1	110V,50Hz/60Hz	1	Makes main motor rotate forward
-KM2	-do-	-do-	-do-	1	Makes main motor rotate reverse
-KM4	-do-	-do-	-do-	1	Used for Δ-connection of main motor
-KM3	-do-	3TB4010-0AG1	-do-	1	Used for Y-connection of main motor
-KM5	-do-	3TB4010-0AG1	-do-	1	For controlling rapid traverse motor
-KM6	-do-	3TB4010-0AG1	-do-	1	For control of lubricating pump
-KM7	-do-	3TB4010-0AG1	-do-	1	For control of coolant pump
-FR1	Thermorelay	3UA5400-2D	26.6A	1	For preventing main motor from overheat
-FR2	-do-	3UA5000-0J	0.78A	1	For preventing lubricating pump from overheat
-FR3	-do-	3UA5000-0G	0.56A	1	For preventing coolant pump from overheat
-FU1	Fuse	B3-0014 TH	6A	3	For protection of short circuit
-FU2	-do-	-do-	-do-	3	For preventing rapid traverse motor from short-circuit

Property of Kent Industrial USA
Please Do Not Reproduce

420V 50Hz (60Hz) Lighting Voltage 24V (110V)

Code	Name	Type	Specifications	Qty.	Application
-M1	Main motor	Y132M-4B3 TH	7.5 kW	1	Used as power source of spindle
-M3	Lubricating pump	A05624 TH	120W	1	For lubrication of headstock
-M2	Rapid traverse motor	A0S5634 TH	250W	1	For rapid travesing of apron
-M4	Coolant pump	A0B-25 TH	90W	1	For cooling during mainting
-TC	Control transformer	JBK2-250 TH 420/110/24/28/6V	110V 115VA 110V 60VA 28V 70VA	1	Used for power supply of control circuit when lighting voltage is 24V.
-TC	Control transformer	JBK2-250 TH 420/110/110/28/6V	110 115VA 110V 60VA 28V 70VA	1	Used for power supply of control circuit when lighting voltage is 110V
-EL	Working lamp	JC TH	40W	1	For lighting power of 40W
-EL	-do-	JC TH	60W	1	For lighting power of 60W

Property of Kent Industrial USA
Please Do Not Reproduce

440V. 50Hz (60Hz) Lighting Voltage 24V(110V)

Code	Name	Type	Specifications	Qty.	Application
-OF	Automatic switch	AM1-30 TH	30A	1	For lead in of power supply
-KM1	Contactor	3TB4417-0AG1	110V,50Hz/60Hz	1	Makes main motor rotate forward
-KM2	-do-	-do-	-do-	1	Makes main motor rotate reverse
-KM4	-do-	-do-	-do-	1	Used for Δ - connection of main motor
-KM3	-do-	3TB4010-0AG1	-do-	1	Used for Y-connection of main motor
-KM5	-do-	3TB4010-0AG1	-do-	1	For controlling rapid traverse motor
-KM6	-do-	3TB4010-0AG1	-do-	1	For control of lubricating pump
-KM7	-do-	3TB4010-0AG1	-do-	1	For control of coolant pump
-FR1	Thermorelay	3UA5400-2D	26.6A	1	For preventing main motor from overheat
-FR2	-do-	3UA5000-0J	0.78A	1	For preventing lubricating pump from overheat
-FR3	-do-	3UA5000-0G	0.56A	1	For preventing coolant pump from overheat
-FU1	Fuse	B3-001A TH	6A	3	For protection of shortcircuit
-FU2	-do-	-do-	-do-	3	For preventing rapid traverse motor from short-circuit
-M1	Main motor	Y132M-4B3 TH	7.5 kW	1	Used as power source of spindle
-M3	Lubricating pump	A05624 TH	120W	1	For lubrication of headstock

Property of Kent Industrial USA
Please Do Not Reproduce

440V, 50Hz (50Hz) Lighting Voltage 24V(110V)

Code	Name	Type	Specifications	Qty.	Application
-M2	Rapid traverse motor	AOS5634 TH	250W	1	For rapid traversing of apron
-M4	Coolant pump	AOB-25 TH	90W	1	For cooling doing machining
-TC	Control transformer	JBK2-250 TH 440/110/24/28/6V	110V 115V/A 110V 60VA 28V 70VA	1	Used for power supply of control circuit when lighting voltage is 24V.
-TC	Control transformer	JBK2-250 TH 440/110/110/28/6V	110 115VA 110V 60VA 28V 70VA	1	Used for power supply of control circuit when lighting voltage is 110V
-EL	Working lamp	JC TH	40W	1	For lighting power of 40W
-EL	-do-	JC TH	60W	1	For lighting power of 60

Property of Kent Industrial USA
Please Do Not Reproduce

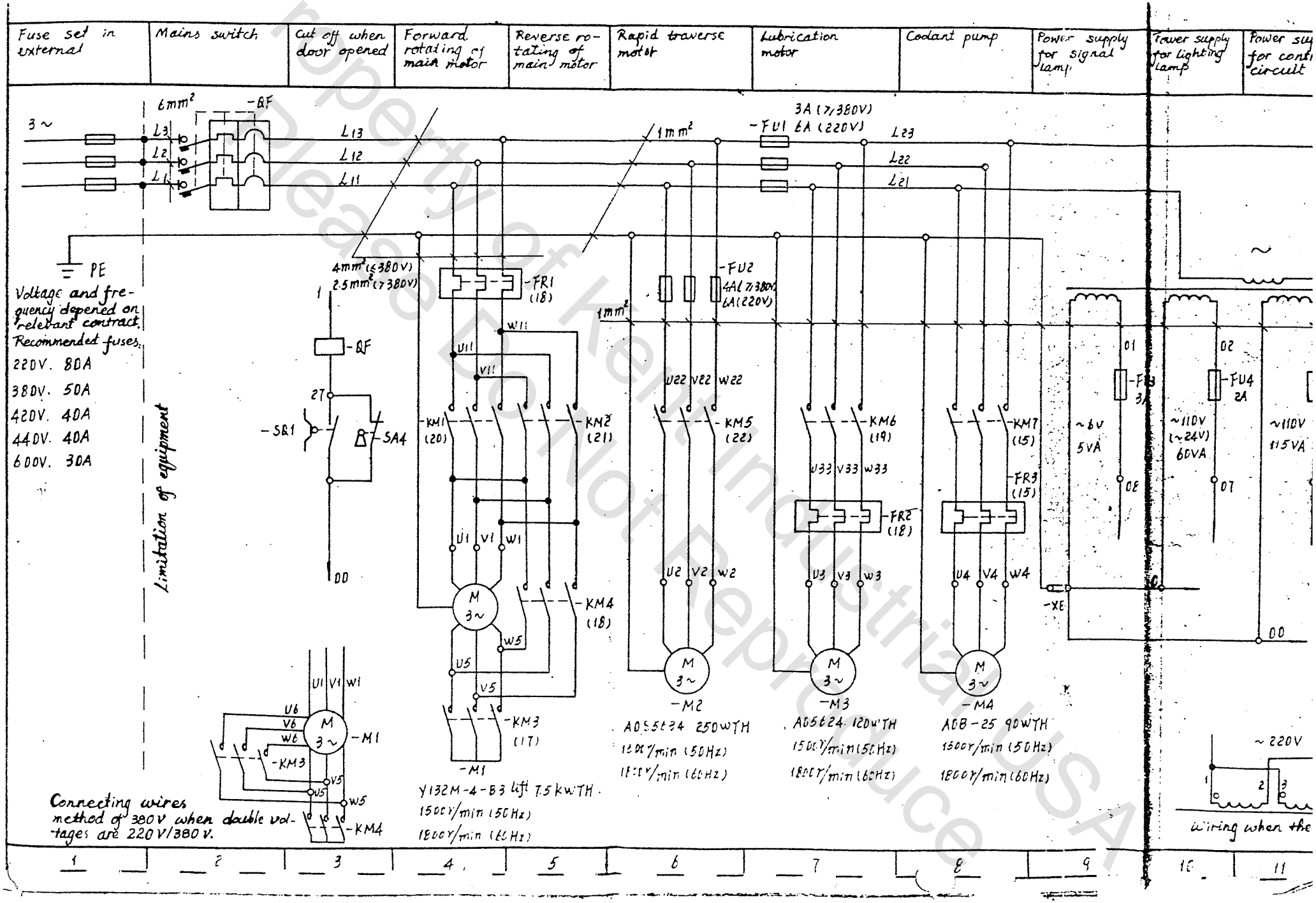

Property of Kent Industrial USA
Please Do Not Reproduce

supply control circuit	Power supply for braking clutch	Cut off when door opened	Braking control and emergency stop	Cooling start	Control of starting main motor	Foot-pedal brake	Protection of overheat	Starting lubrication	Forward rotating of spindle	Reverse rotating of spindle	Rapid traverse starting	Signal lamp	Lighting lamp	Control of braking clutch

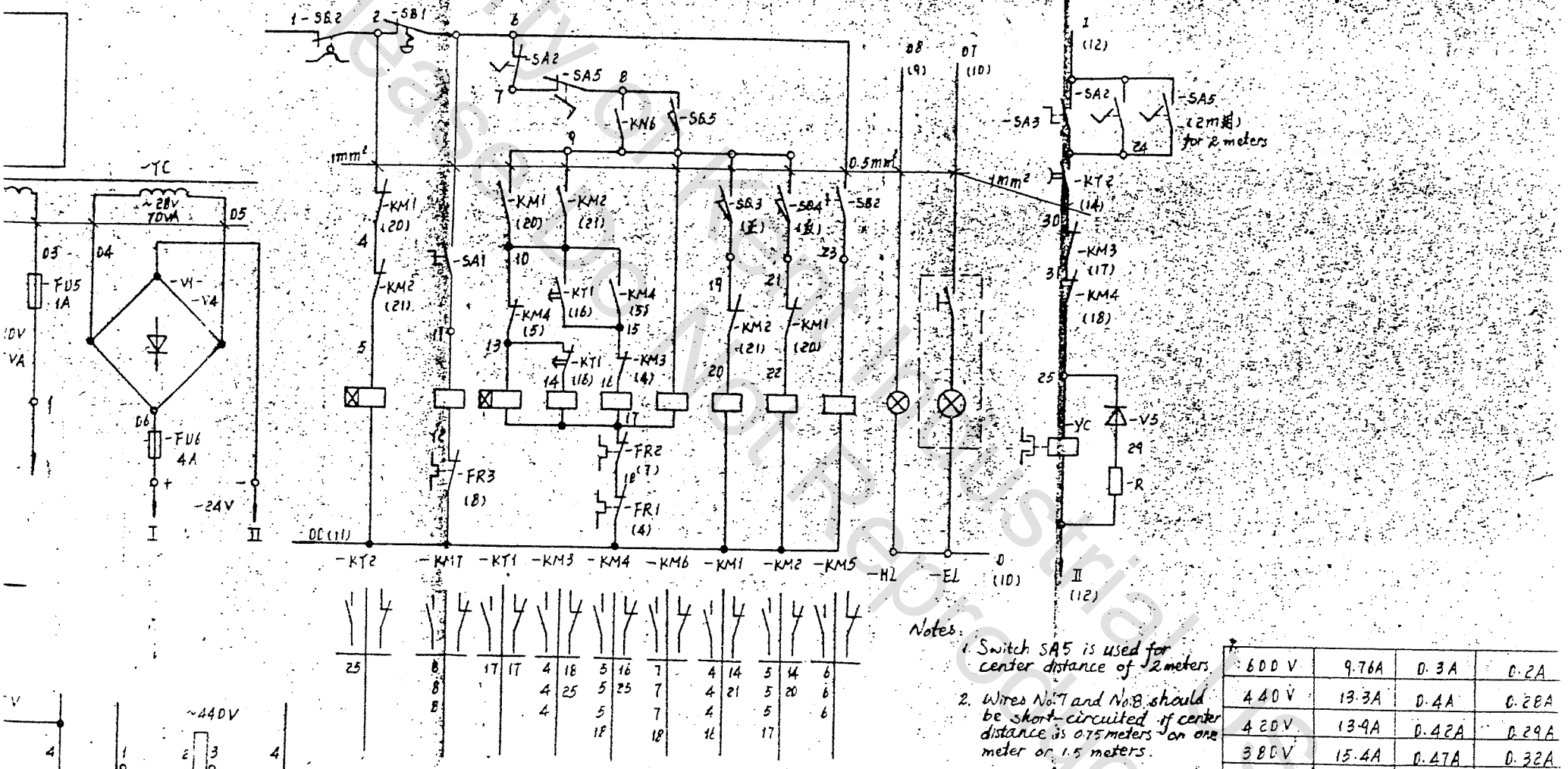

Notes:

1. Switch SA5 is used for center distance of 2 meters.
2. Wires No.7 and No.8 should be short-circuited if center distance is 0.75 meters on one meter or 1.5 meters.

Voltage / Elements	-FR1	-FR2	-FR3
600 V	9.76A	0.3A	0.2A
440 V	13.3A	0.4A	0.28A
420 V	13.9A	0.42A	0.29A
380 V	15.4A	0.47A	0.32A
220 V	26.6A	0.79A	0.55A

the primary coil of transformer is 220V/440V.

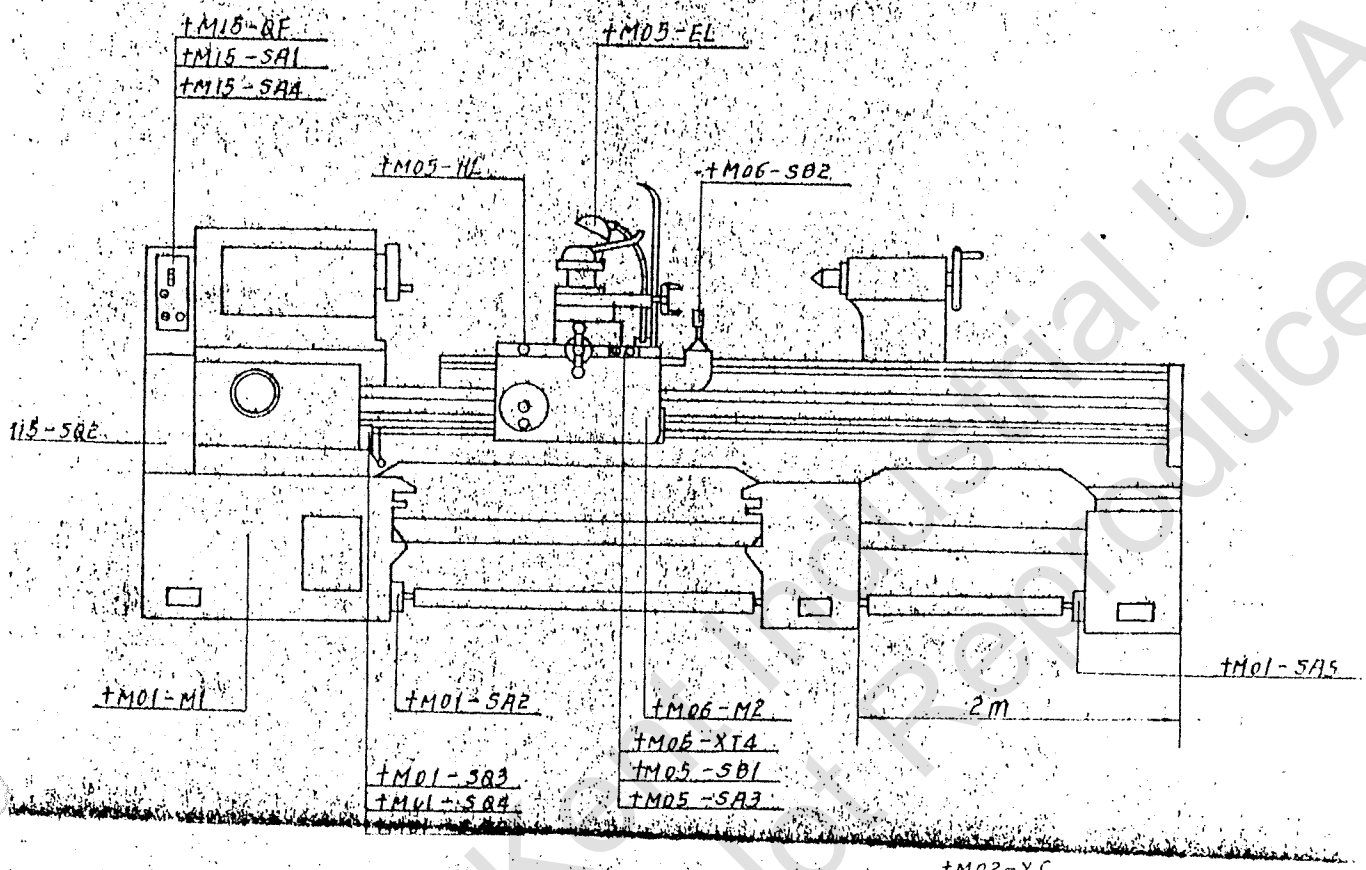

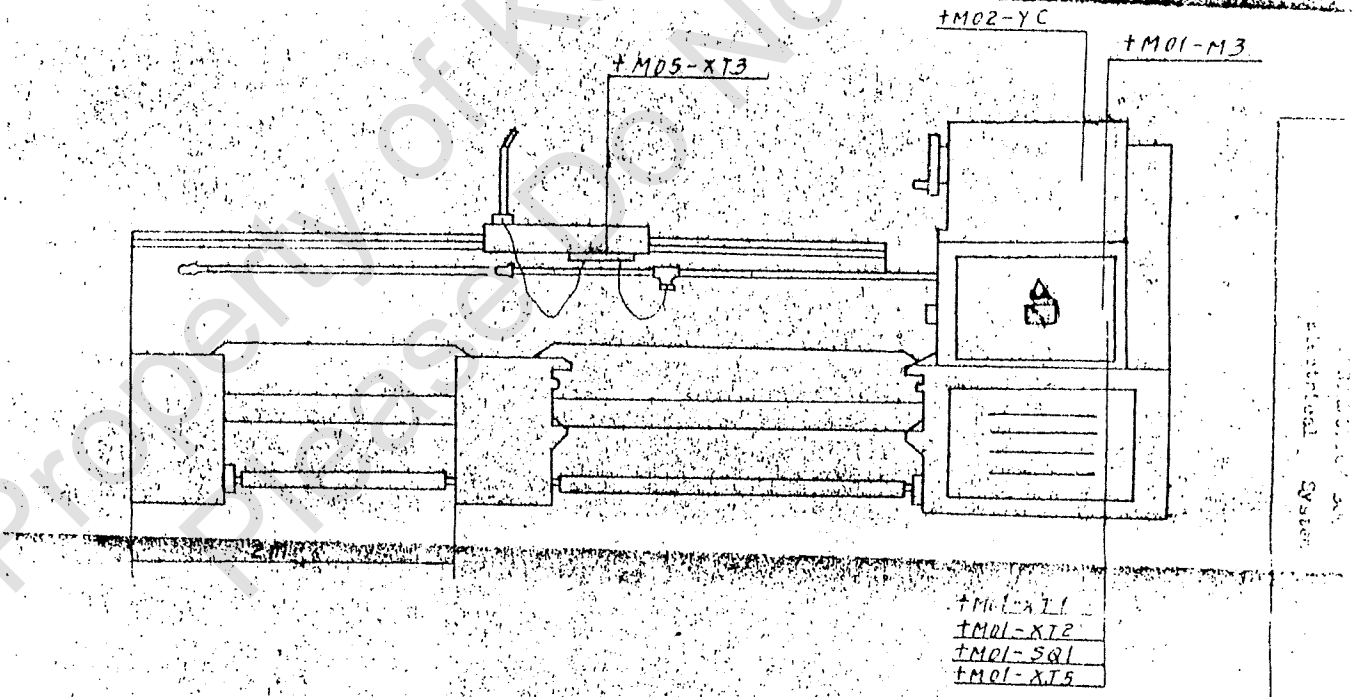

Property of KS Industrial USA
Please Do Not Reproduce