KENT USA®

Since 1979

KLS-1840/1860/2060/2080
Manual Economy Lathe
Parts Manual

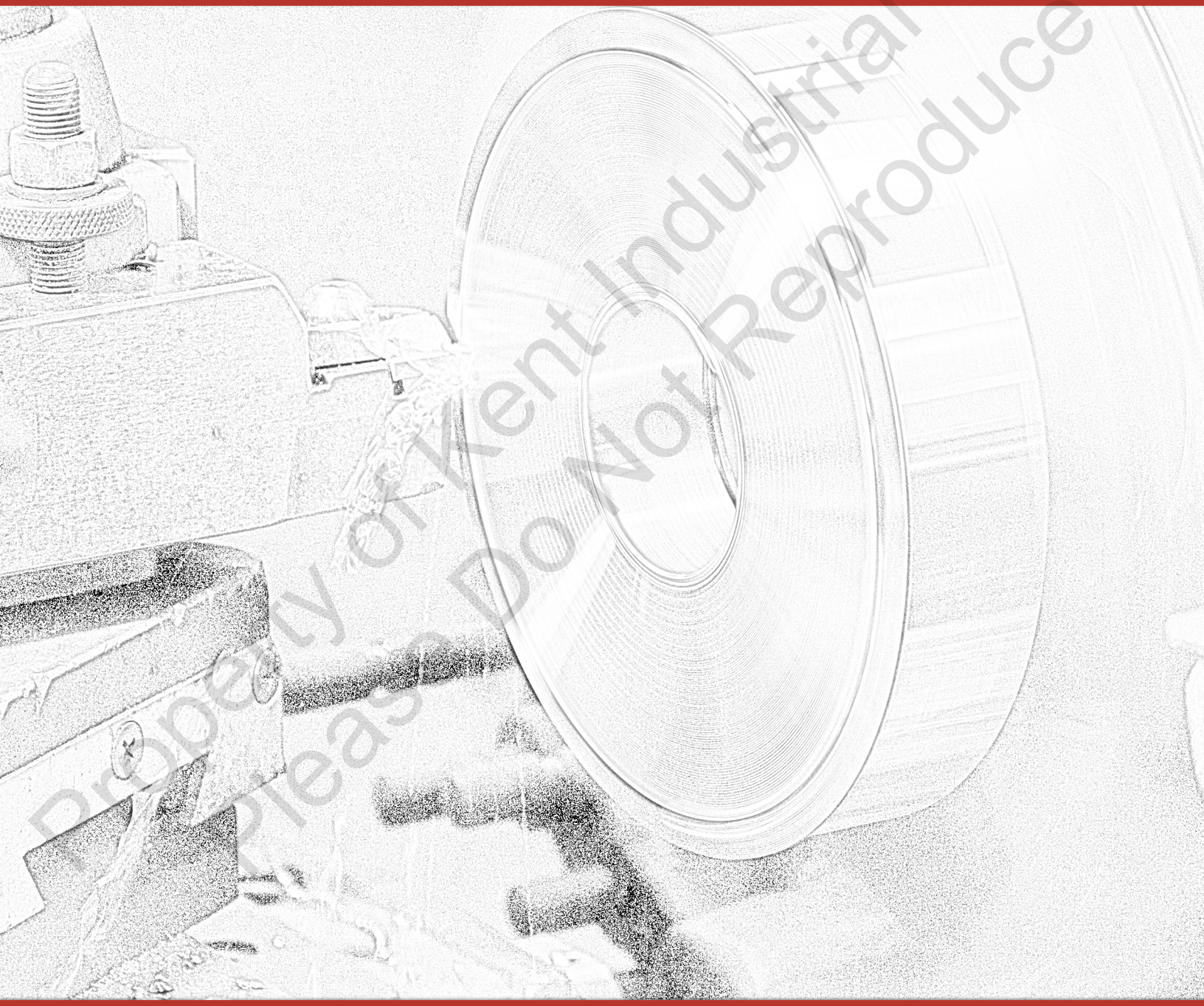

Property of Kent Industrial USA
Please Do Not Reproduce

www.kentusa.com | 1.800.KENT.USA

Preface

In order to make you select spare parts well, maintain the lathes and ensure normal operation of the lathes, conveniently, we have compiled the list of spare parts, and the simple construction.

The list consists mainly of driving gears, shafts, bushes, worm, worm gears, split nuts, leadscrews, racks, feed rods, driving forks, slide blocks, control cams, levers eetting gibs and seal rings etc.

The types and quantities of the bearings and the electrical elements can be found in the ball and roller bearing diagram and the electrical circuit diagram which are shown in the "INSTRUCTION BOOK" for models CA6140, CA6240, CA6150 and CA6250. From these diagrams you may select the bearings and the electrical elements which are by you required

Excepting spare parts in relation to beds, other spare parts are applicable respectively to models CA6140, CA6240, CA6150 and CA6250, therefore we have also put them in this list. The Works' part number and the quantities of the rack, leadscrew and feed rod in bed units are determined according to the model and size (distance between the centres) of each lathe indicated in the "Remarks" column of the list.

We recommend: You may select the spare parts as you need with reference to the list. And it is necessary to indieate the manufacturer, the model of the lathe, the yielding date (serial number), designation, work's part number, quantity of the required spare, part so that we can supply the spare parts correctly.

Property of Kent Industrial USA
Please Do Not Reproduce

维 修 配 件 目 录

LIST OF SPARE PARTS

序号 oN.	件 号（规格和型号） Works' part Number (Size & Type)	配 件 名 称 Designation	每台件数 Qty./set	备 注 Remarks
1	01013 (全长140mm) (Full length: 140 mm)	齿 条 Rack	1	CA6240 CA6250
2	01014 (全长604mm) (Full length: 604mm)	齿 条 Rack	1	CA6140 CA6240 CA6150 CA6250
3	01015 (全长502mm) (Full length: 502mm)	齿 条 Racks'	1	CA6140/1000 CA6150/1000 CA6240/1500 CA6250/1500
			2	CA1640/1500 CA6150/1500
			3	CA6140/2000 CA6250/2000
4	01039/750 (全长251mm) (Full length: 251mm)	齿 条 Rack	1	CA6140/750 CA6150/750 CA6240/1000 CA6250/1000 CA6240/1500 CA6250/1500
5	01016/750	丝 杠 Leadscrew	1	CA6140/750 CA6240/750 CA6150/750 CA6250/750
6	01016/1000	丝 杠 Leadscrew	1	CA6140/1000 CA6240/1000 CA6150/1000 CA6250/1000

Property of Kent Industrial USA
Please Do Not Reproduce

序号 No.	件号（规格和型号） Works' Part Number (Size & Type)	配件名称 Designation	每台件数 Qty./set	备注 RemarkS
7	01016/1500	丝杠 Leadscrew	1	CA6140/1500 CA6240/1500 CA6150/1500 CA6250/1500
8	01016/2000	丝杠 Leadscew	1	CA6140/2000 CA6150/2000
9	01017/750	光杠 Feed rod	1	CA6140/750 CA6240/750 CA6150/750 CA6250/750
10	01017/1000	杠杠 Feed rod	1	CA6140/1000 CA6240/1000 CA6150/1000 CA6250/1000
11	01017/1500	光杠 Feed rod	1	CA6140/1500 CA6240/1500 CA6150/1500 CA6250/1500
12	01017/2000	光杠 Feed rod	1	CA6140/2000 CA6150/2000
13	01019	后托架 Rear support	1	
14	02013	I 轴 Shaft I	1	
15	02015	皮带轮座 Pulley support	1	
16	02020	齿轮 Gear	1	
17	02023	摩擦片 Friction clutch discs	12	

Property of Kent Industrial USA
Please Do Not Reproduce

序号 No.	件号（规格和型号） Works' Part Number (Size & Type)	配件名称 Designation	每台件数 Qty./set	备注 Remarks
18	02024	摩擦片 Friction clutch discs	14	
19	02028	齿轮 Gear	1	
20	02029	拉杆 Pull rod	1	
21	02030	杠杆 Lever	1	
22	02031	压环 Compressing ring	1	
23	02032	Ⅱ轴 Shaft Ⅱ	1	
24	02035	齿轮 Gear	1	
25	02037	齿轮 Gear	1	
26	02038	齿轮 Gear	1	
27	02039	齿轮 Gear	1	
28	02041	Ⅲ轴 Shaft Ⅲ	1	
29	02042	齿轮 Gear	1	
30	02043	齿轮 Gear	1	
31	02045	齿轮 Gear	1	
32	02046	齿轮 Gear	1	
33	02047	Ⅳ轴 Shaft Ⅳ	1	
34	02049	齿轮 Gears	2	
35	02050	齿轮 Gear	1	
36	02052	齿轮 Gear	1	

Property of Kent Industrial USA
Please Do Not Reproduce

序号 No.	件号（规格和型号） Works' Part Number (Size & Type)	配件名称 Designation	每台件数 Qty./set	备注 Remarks
37	02054	V 轴 Shaft V	1	
38	02057	齿轮 Gear	1	
39	02058	齿轮 Gear	1	
40	02059	齿轮 Gear	1	
41	0189030L	主轴 Spindle	1	
42	02065A	密封圈 Seal ring	1	
43	02069	套 Bush	1	
44	02070	斜齿轮 Bevel gear	1	
45	02071	齿轮 Gear	1	
46	02073	齿轮 Gear	1	
47	02079	齿轮 Gear	1	
48	02082	拨叉 Driving fork	1	
49	02083	齿轮 Gear	1	
50	02084	齿轮 Gear	1	
51	02085	齿轮 Gear	1	
52	02086	Ⅸ 轴 Shaft Ⅸ	1	
53	02087	齿轮 Gear	1	
54	02089	Ⅹ 轴 Shaft Ⅹ	1	
55	02092	齿轮 Gear	1	

Property of Kent Industrial USA
Please Do Not Reproduce

序号 No.	件号（规格和型号） Works' Part Number (Size & Type)	配件名称 Designation	每台件数 Qty./set	备注 Remarks
56	02094	齿轮 Gear	1	
57	02097	拔叉 Driving fork	1	
58	02099	XII轴 Shaft XII	1	
59	02100	拔叉 Driving fofk	1	
60	02102	齿条轴 Rack rod	1	
61	02103	拔叉 Driving fosk	1	
62	02107	拔叉 Driving fork	1	
63	02113	杠杆 Lever	1	
64	02114	拔杆 Driving lever	1	
65	02115	凸轮 Cam	2	
66	02125	杠杆 Lever	1	
67	02126	拔块 Driving blcok	1	
68	02129	杠杆 Lever	1	
69	02139	凸轮 Cam	1	
70	02141	凸轮 Cam	1	
71	02142	杠杆 Lever	1	
72	02143	杠杆 Lever	1	
73	02145	杠杆 Lever	1	
74	02146	刹车钢带 Brake steel band	1	

Property of Kent Industrial USA
Please Do Not Reproduce

序号 No.	件号（规格和型号） Works' Part Number (Size & Type)	配件名称 Designation	每台件数 Qty./set	备注 Remarhs
75	02147	刹车带 Brake band lining	1	
76	02149	调整螺钉 Adjusting screw	1	
77	02150	杠杆 Lever	1	
78	02157	扇形齿轮 Sector gear	1	
79	02167	调整螺钉 Asjusting screws	2	
80	02193	滑块 Slide blocks	13	
81	20; G51—2	密封环 Seal rings	3	
82	30; G51—2	密封环 Seal ring	1	
83	32; G51—2	密封环 Seal ring	1	
84	36; G51—2	密封环 Seal ring	1	
85	35×55; G51—4	密封环 Seal ring	1套 set	
86	25×32ga×40; Q41—1	轴套 Bush	1	
87	B铜25×32ga×32; Q41—1 B,copper	轴套 Bush	2	
88	16; Q99—1	滑块 Slide block	3	
89	6/5; S25—10	顶尖套 Centre sleeve	1	
90	03014	丝杆 Leadscrew	1	
91	03015	螺母 Nut	1	
92	Ⅱ.5; S25—2	顶尖 Centre	1	
93	04012	镶条 Gib	1	

Property of Kent Industrial USA
Please Do Not Reproduce

序号 No.	件号（规格和型号） Works' Part Number (Size & Type)	配件名称 Designation	每台件数 Qty./set	备注 Remarks
94	04023	销 Locating Pin	1	
95	04024	套 Bushes	4	
96	04028	刀架螺杆 Tool post screw	1	
97	04029	螺母 Nut	1	
98	M16×50;GB83—66	方头螺钉 Square tool post screws	8	
99	05017	齿轮 Gear	1	
100	05018	套 Bush	1	
101	05019	进刀螺杆 Feed screw	1	
102	05021	螺母 Nut	1	
103	05022	楔块 Wedge	1	
104	05023	螺母 Nut	1	
105	05038	镶条 Gib	1	
106	06012A	齿轮轴 Gear shaft	1	
107	06013	齿轮 Gear	1	
108	06014	齿轮 Gear	1	
109	06015A	套 Bush	1	
110	06023	齿轮 Gear	1	
111	06024	齿轮 Gear	1	
112	06025B	套 Bush	1	

Property of Kent Industrial USA
Please Do Not Reproduce

序号 No.	件号（规格和型号） Works' Part Number (Size & Type)	配件名称 Designation	每台件数 Qty./set	备注 Remarks
113	06028	轴 Shaft	1	
114	06029	齿轮 Gear	1	
115	06030	齿轮 Gear	1	
116	06031	轴 Shaft	1	
117	06032	齿轮 Gear	1	
118	06033A	蜗轮 Worm Wheel	1	
119	06034	齿轮 Gear	1	
120	06035	齿轮 Gear	1	
121	06039	齿轮 Gear	1	
122	06040	齿轮 Gear	1	
123	06041	齿轮 Gear	1	
124	06042	轴 Shaft	1	
125	06043	齿轮 Gear	1	
126	06044	齿轮 Gear	1	
127	06045	结合子 Clutches	2	
128	06050	凸轮 Cam	1	
129	06051	镶条 Gib	1	
130	06062	套 Bush	1	
131	06063	套 Bush	1	

Property of Kent Industrial USA
Please Do Not Reproduce

序号 No.	件号（规格和型号） Works' Part Number (Size & TyPe)	配件名称 Designation	每台件数 Qty./set	备注 Remarks
132	06068	凸轮 Cam	1	
133	06069	拔叉 Driving fork	1	
134	06082A	杠杆 Lever	1	
135	06086	对开螺母 Split nut	1	
136	06090	齿轮 Geat	1	
137	06091	套 Bush	1	
138	06092	齿轮 Geat	1	
139	06101	齿轮 Gear	1	
140	06102A	星形体 Astral body	1	
141	06107A	蜗杆 Worm	1	
142	06108A	轴 Shaft	1	
143	06109	齿轮 Gear	1	
144	06110	套 Bush	1	
145	06111A	齿轮 Geat	1	
146	06117	拔叉 Driving fork	1	
147	06119	拔叉 Driving fork	1	
148	06123A	齿轮 Gear	1	
149	06124	凸轮 Cam	1	
150	06143A	套 Bush	1	

Property of Kent Industrial USA
Please Do Not Reproduce

序号 No.	件号(规格和型号) Works' Part Number (Size & Type)	配件名称 Designation	每台件数 Qty./set	备注 Remarks
151	16×22ga×16; Q41—1	轴套 Sleeve	1	
152	20×28ga×25; Q41—1	轴套 Sleeves	2	
153	C22×30ga×20; O41—1	轴套 Sleeve	1	
154	B22×30ga×28; Q41—1	轴套 Sleeve	1	
155	B22×30ga×22; Q41—1	轴套 Sleeve	2	
156	28×35ga×30; Q41—1	轴套 Sleeve	1	
157	18×25ga×30; Q41—1	轴套 Sleeve	1	
158	8; C31—1—34	滚子 Rollers	3	
159	4; C31—1—35	销 Locating Pins	3	
160	07014	轴 Shaft	1	
161	07015	齿轮 Gear	1	
162	07017	齿轮 Gear	1	
163	07018	轴 Shaft	1	
164	07020	齿轮 Cam	1	
165	07021	轴 Shaft	1	
166	07022	齿轮 Gear	1	
167	07026	齿轮轴 Gear Shaft	1	
168	07027	齿轮 Gear	1	
169	07028	齿轮轴 Gear Shaft	1	

Property of Kent Industrial USA
Please Do Not Reproduce

序号 No.	件号（规格和型号） Works' Part Number (Size & Type)	配件名称 Designation	每台件数 Qty./set	备注 Remarks
170	07029	齿轮 Gear	1	
171	07030	齿轮 Gear	1	
172	07031	齿轮 Gear	1	
173	07032	齿轮 Gear	1	
174	07033	套 Bush	1	
175	07035	齿轮 Gear	1	
176	07036	轴 Shaft	1	
177	07037	轴 Shaft	1	
178	07038	齿轮 Gear	1	
179	07039	滑块 Slide blocks	2	
180	07041	杠杆 Lever	1	
181	07047	联杆 Connecting	1	
182	07049	拔块 Driving block	1	
183	07052	杠杆 Lever	1	
184	07053	杠杆 Lever	1	
185	07054	拔块 Driving block	1	
186	07061	偏心轮 Eccentric	1	
187	07063	凸轮板 Cam plate	1	
188	07064	滑块 Slide block	1	

Property of Kent Industrial USA
Please Do Not Reproduce

序号 No.	件号（规格和型号） Works' Part Number (Size & Type)	配件名称 Designation	每台件数 Qty./set	备注 Remarks
189	07071	齿轮 Gear	1	
190	07072	齿轮 Gear	1	
191	07073	齿轮 Gear	1	
192	07074	齿轮 Gear	1	
193	07075	齿轮 Gear	1	
194	07076	齿轮 Gear	1	
195	07077	齿轮 Gear	1	
196	07078	齿轮 Gear	1	
197	07081	齿轮 Gear	1	
198	07082	齿轮 Gear	1	
199	07083	齿轮 Gear	1	
200	07084	齿轮 Gear	1	
201	07095A	杠杆 Lever	1	
202	07096A	杠杆 Lever	1	
203	07097A	杠杆 Lever	1	
204	07098A	杠杆 Lever	1	
205	07113	滑块 Slide block	4	
206	30×50；G51—4	密封圈 Seal ring	2套 2sets	
207	B12；Q99—1	滑块 Slide block	1	

Property of Kent Industrial USA
Please Do Not Reproduce

序号 No.	件 号（规格和型号） Works' Part Number (Size & Type)	配 件 名 称 Designation	每台件数 Qty./set	备 注 Remarks
208	08012	套 Bush	1	
209	08013	套 Bnsh	1	
210	08015	轴 Shaft	1	
211	08018	齿 轮 Gear	1	
212	08019	齿 轮 Gear	1	
213	08020	齿 轮 Gear	1	
214	R12—1	叶片润滑泵 Vane lubricating pump	1	

Property of Kent Industrial USA
Please Do Not Reproduce

床 身 装 配 图

Assembly Drawing of Bed

各规格齿
条件号见目录
Works' part numbers of all sizes of the racks are shown in the list.

各规格丝
杠件号见目录
Works' part numbers of all sizes of the leadscrews are shown in the list.

各规格光
杠件号见目录
Works' part numbers of all sizes of the feed rods are shown in the list.

01019

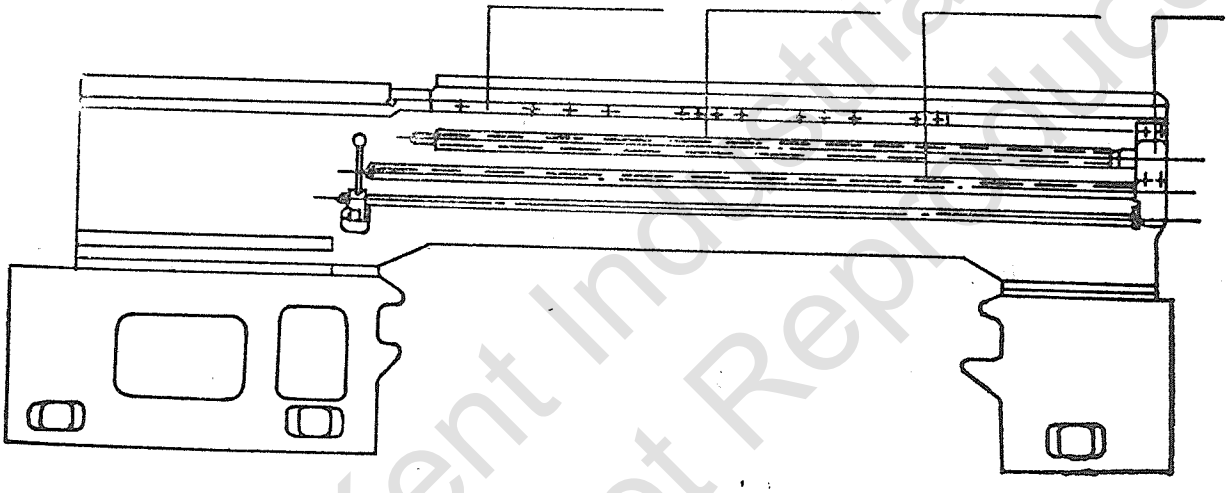

床 头 箱 外 观 图

External view of Headstock

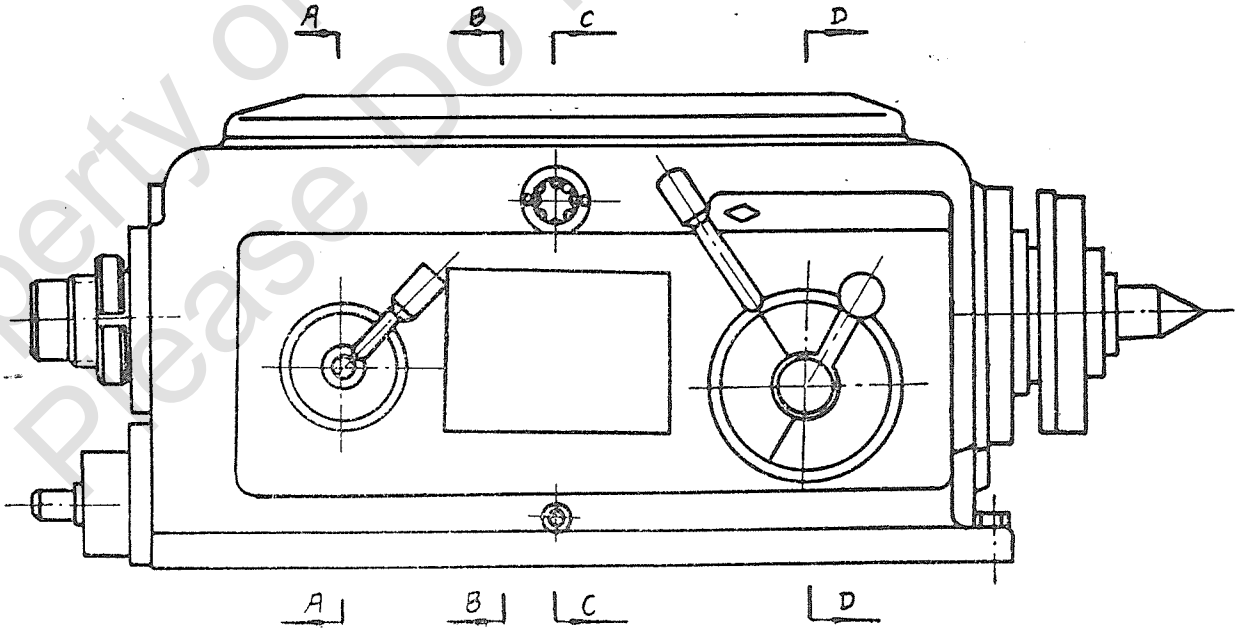

Property of Kent Industrial USA
Please Do Not Reproduce

床头箱展开图

Stratched—out View of Headstock

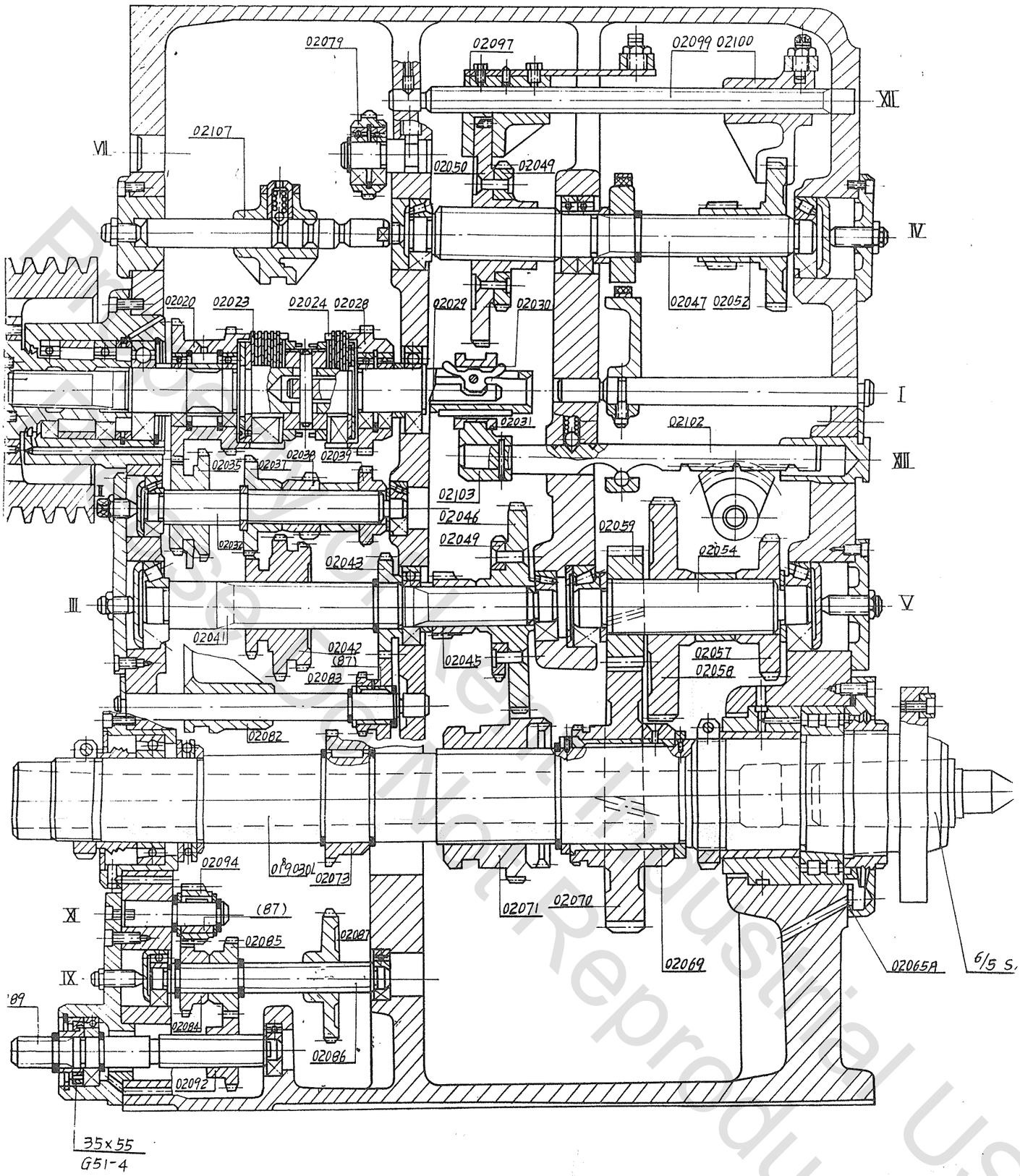

(87) B铜25×32ga×32

(87) B copper 25 x 32ga x32

Production Machinery Industrial USA
Please Do Not Reproduce

A—A 床头箱操纵机构

A—A Control Mechanism of Headstock

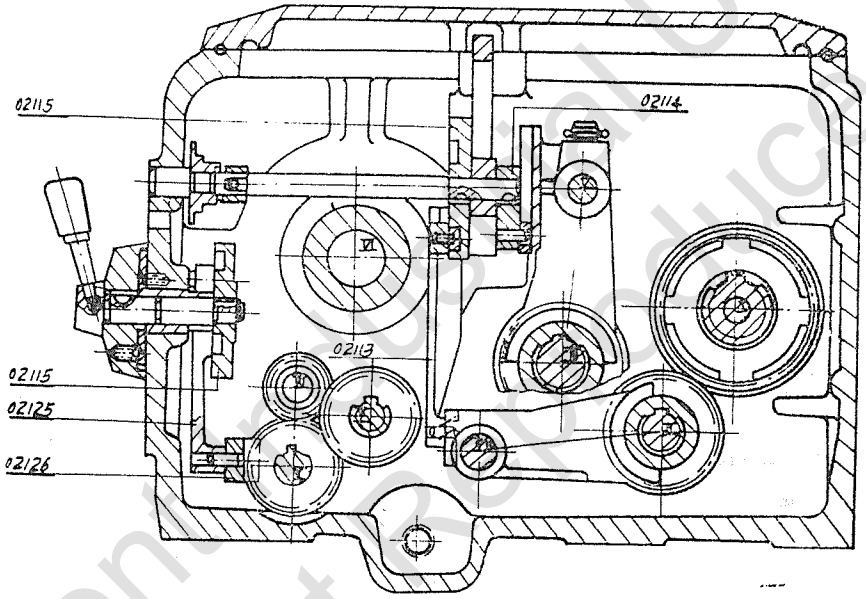

B—B 床头箱操纵机构

B—B Control Mechanism of Headstock

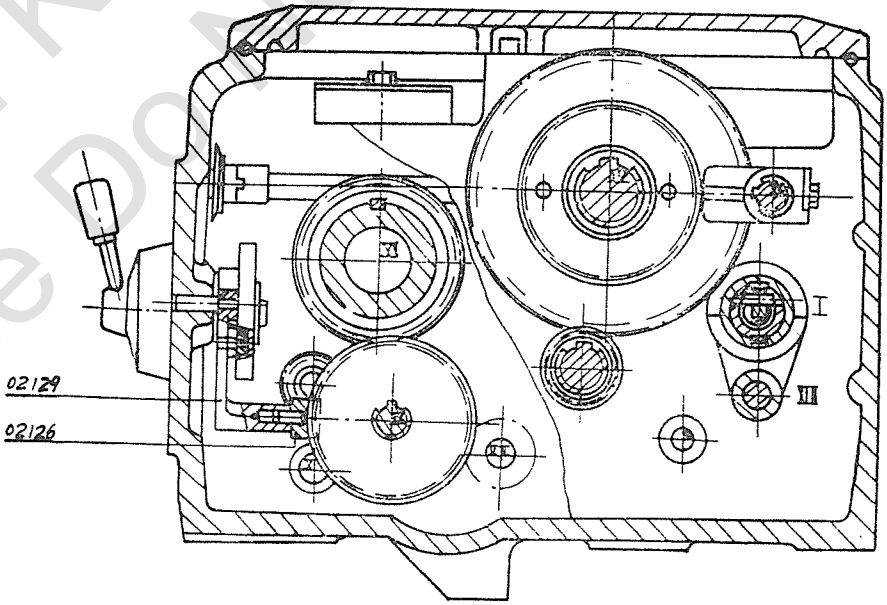

Property of Kentucky Tool USA
Please Do Not Reproduce

C—C 床头箱操纵机构

C—C Control Mechanism of Headstock

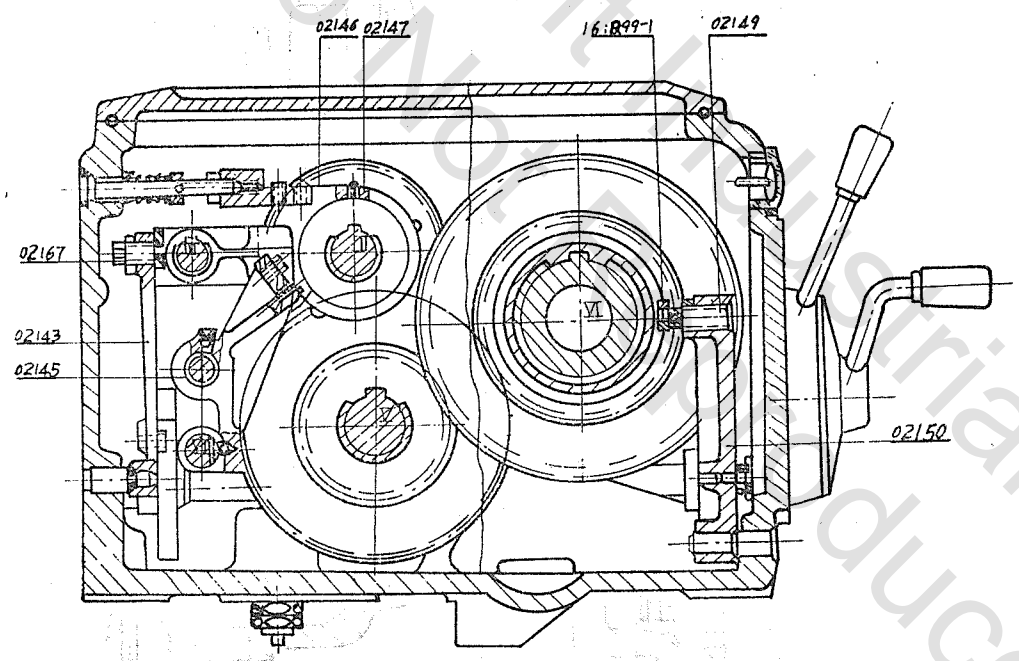

Property of Kent Industrial USA
Please Do Not Reproduce

D—D 床头箱操纵机构

D—D Control Mechanism of Headstock

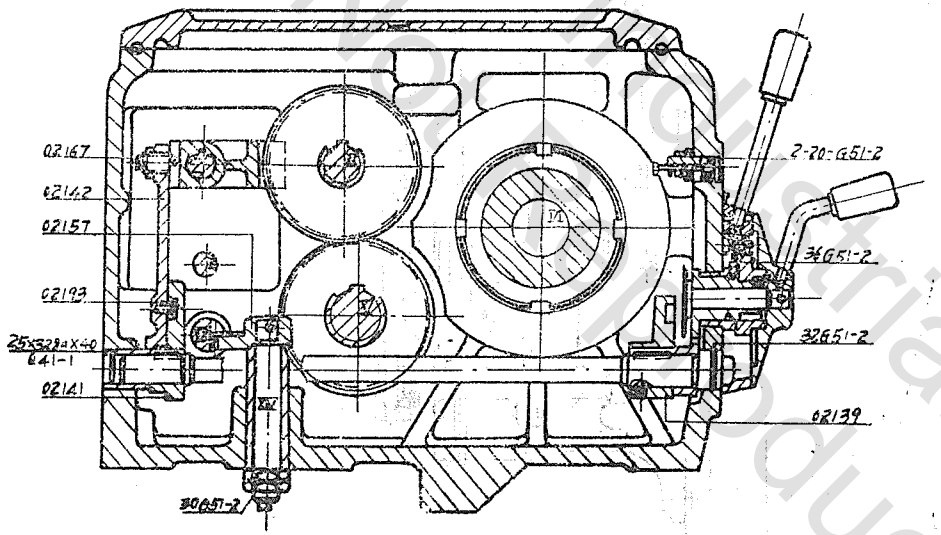

Property of Kent Industrial USA
Please Do Not Reproduce

台 尾 装 配 图

Assembly Drawing of Tailstock

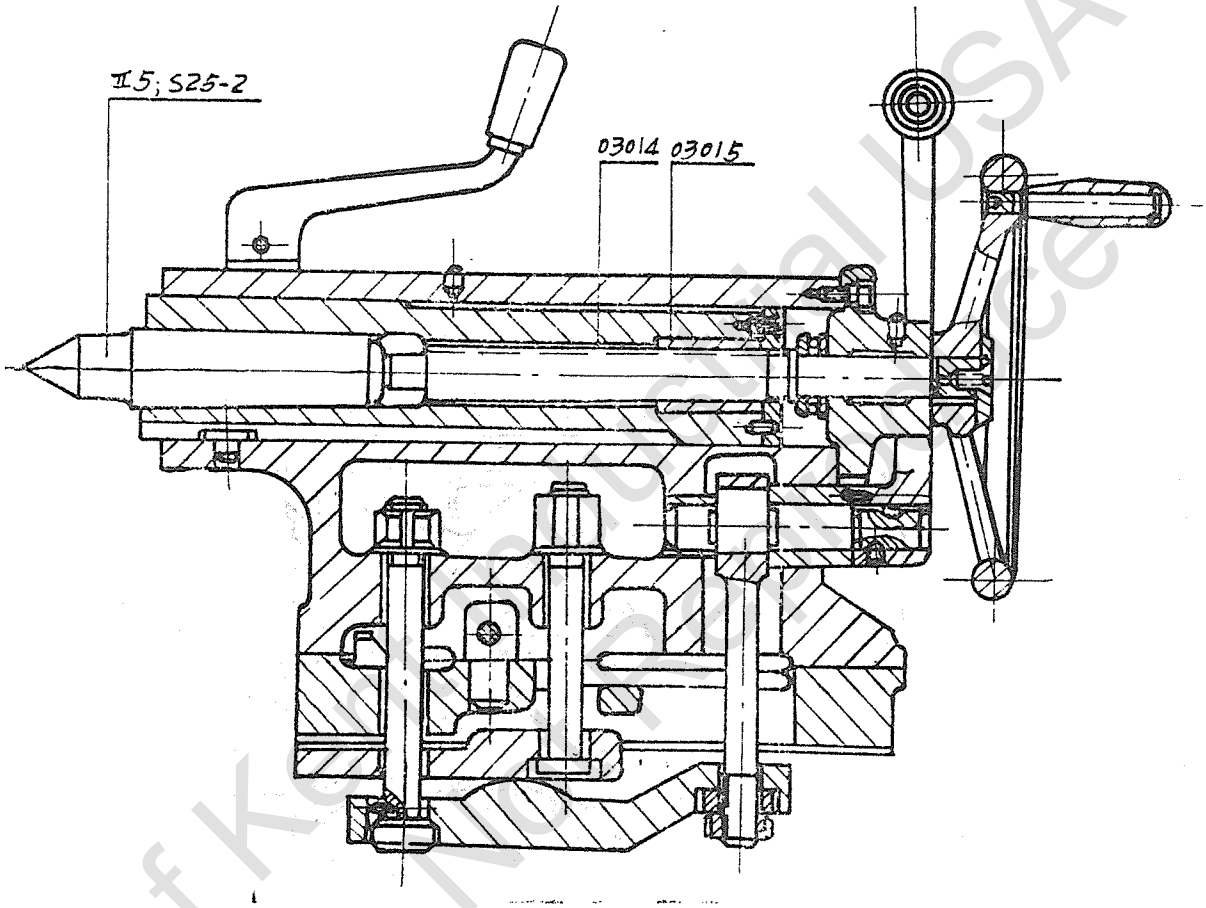

Property of Kennedy Machinery USA
Please Do Not Resale

刀 架 装 配 图

Assembly Drawing of Tool post

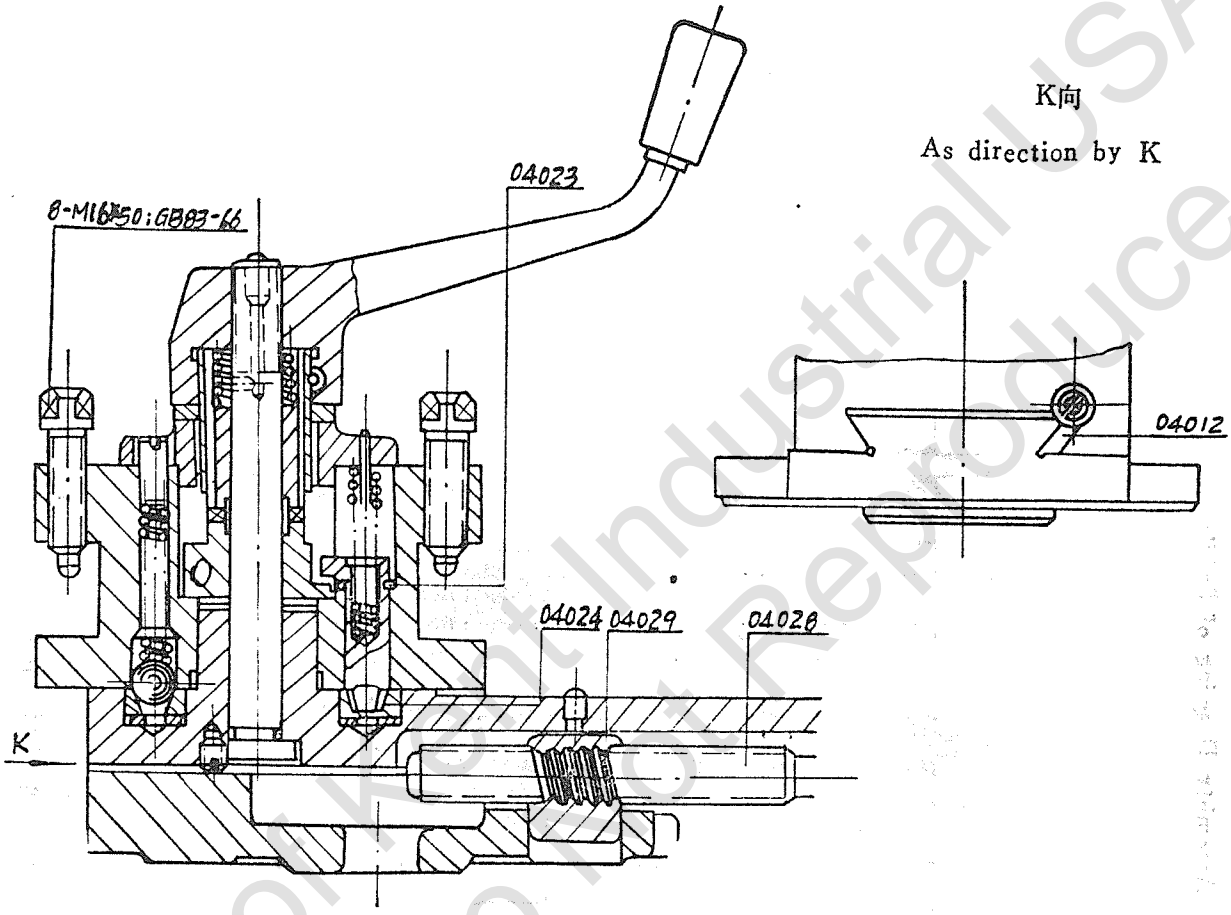

Property of Kent Industrial USA
Please Do Not Reproduce

床 鞍 装 配 图

Assembly Drawing of Saddle

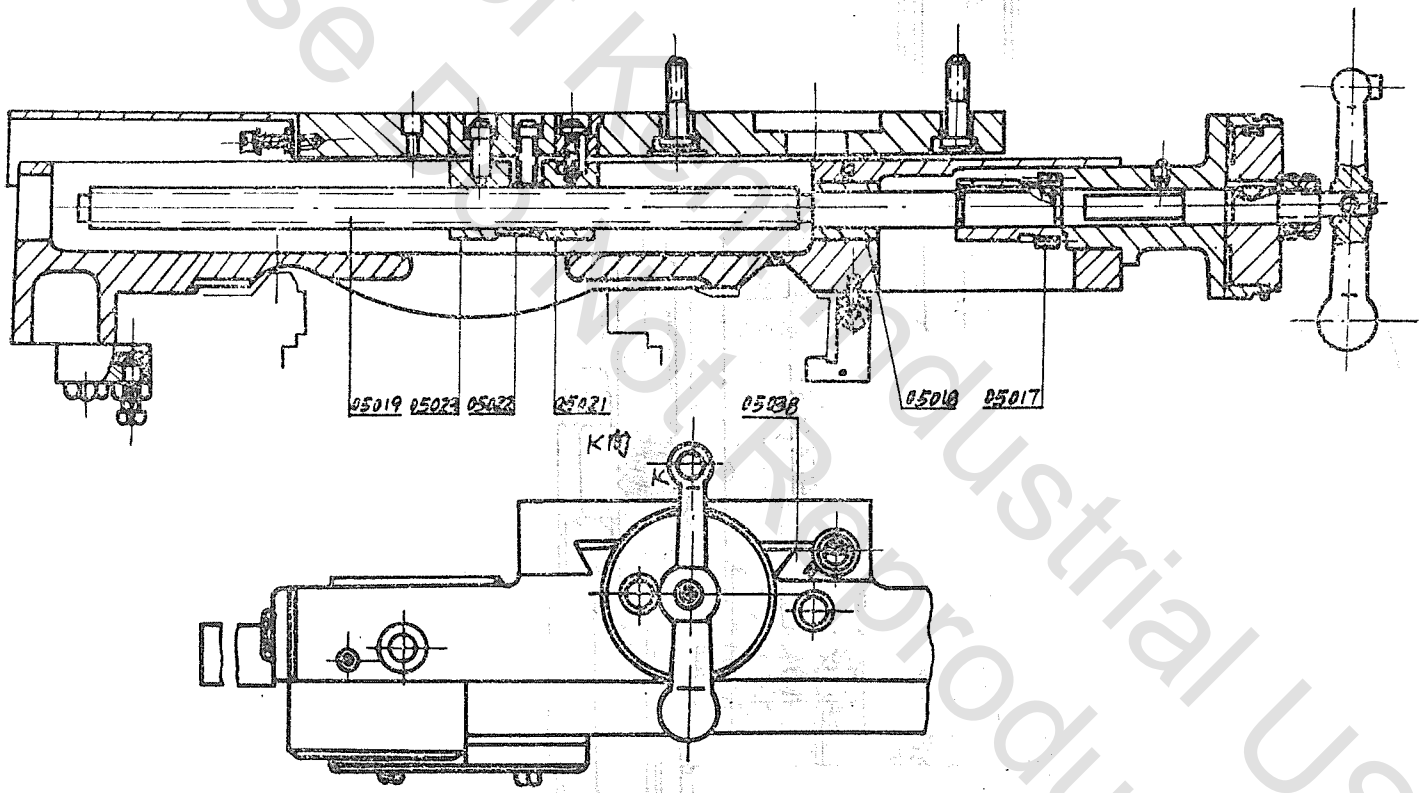

Property of Kansas Industrial USA
Please Do Not Reproduce

溜 板 箱 展 开 图

Stretched—Out View of Apron

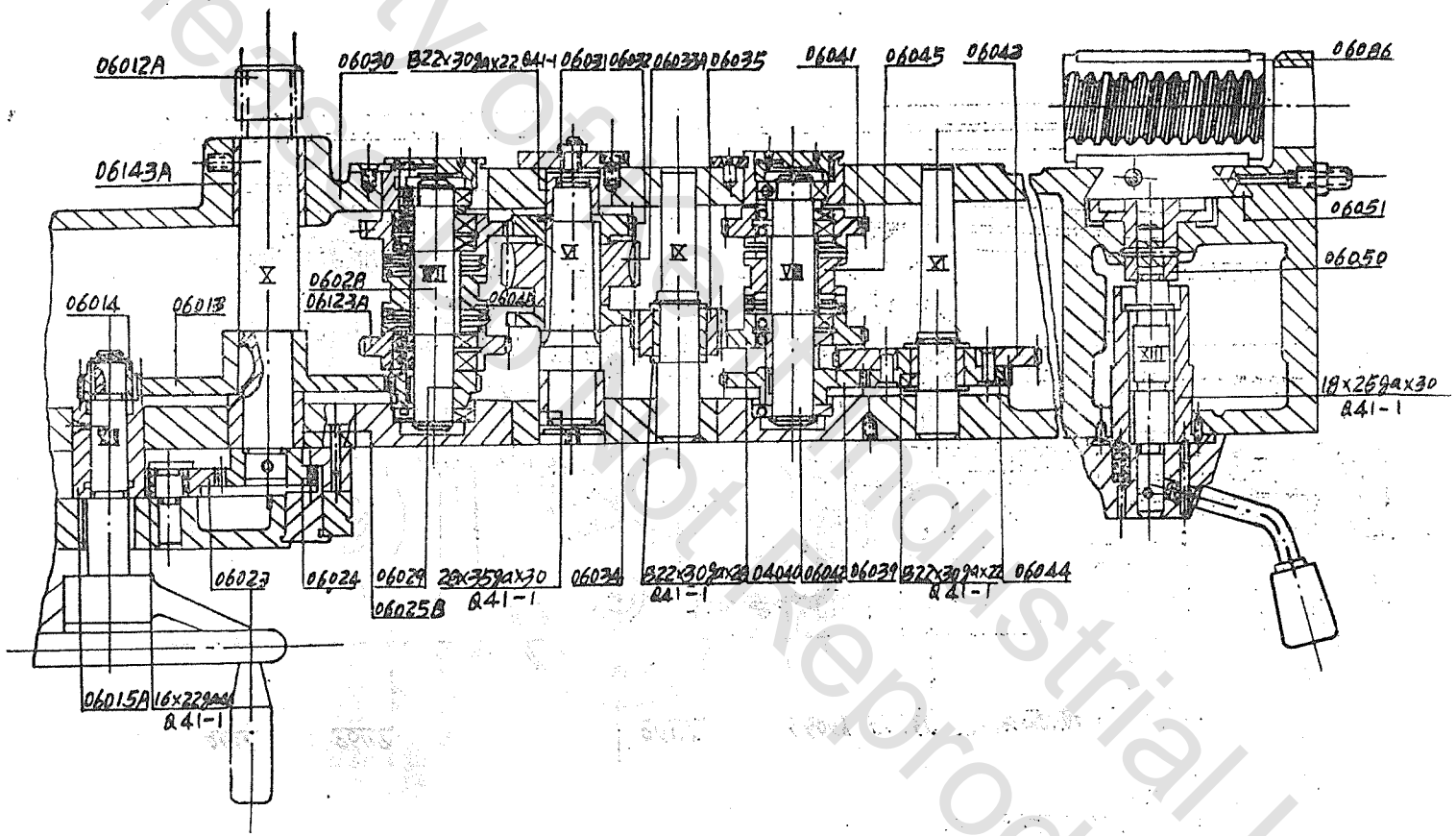

Property of Sam Industrial USA
Please Do Not Reproduce

溜板箱操纵机构

Control Mechanism of Apron

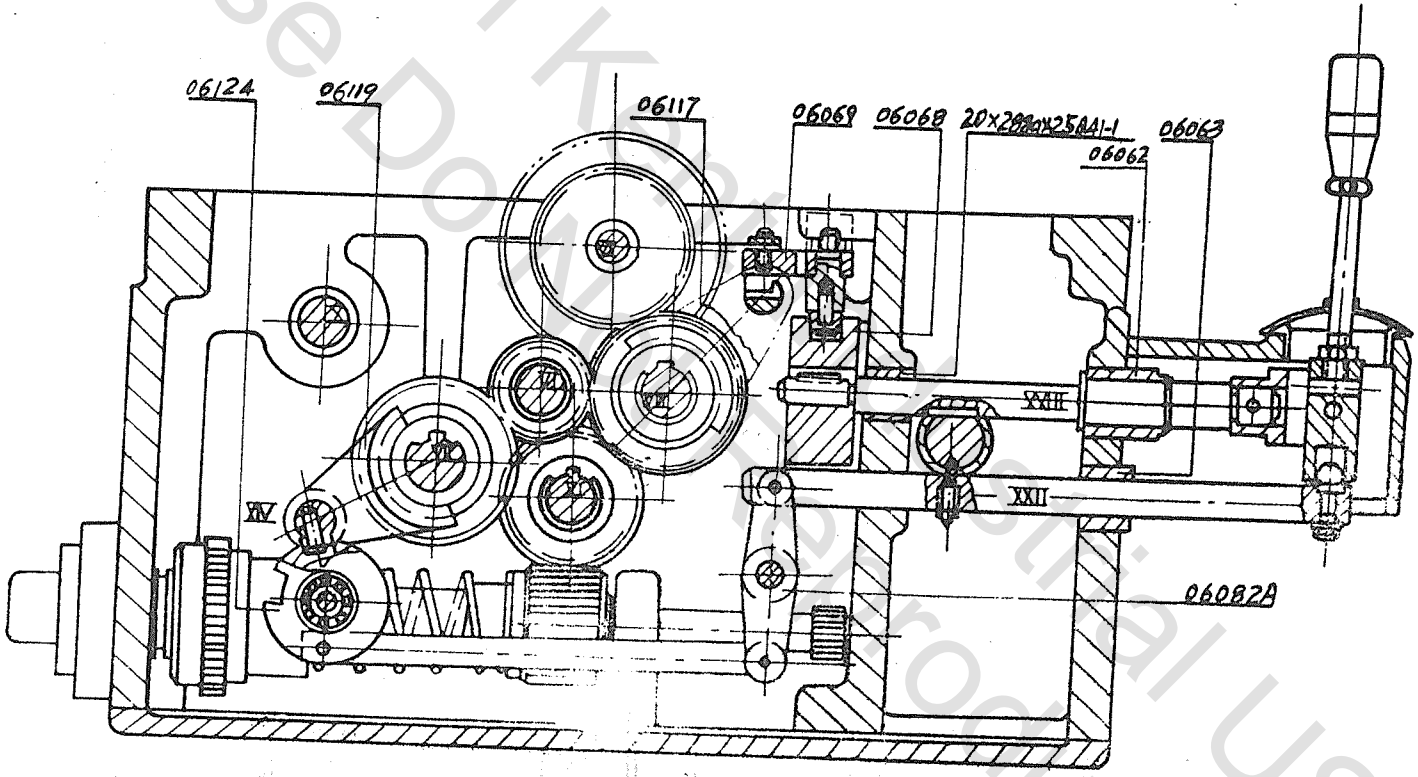

Property of Kent State Technical USA
Please Do Not Reproduce

溜板箱蜗杆轴装配图

Assembly Drawing of Worm Shaft in the Apron

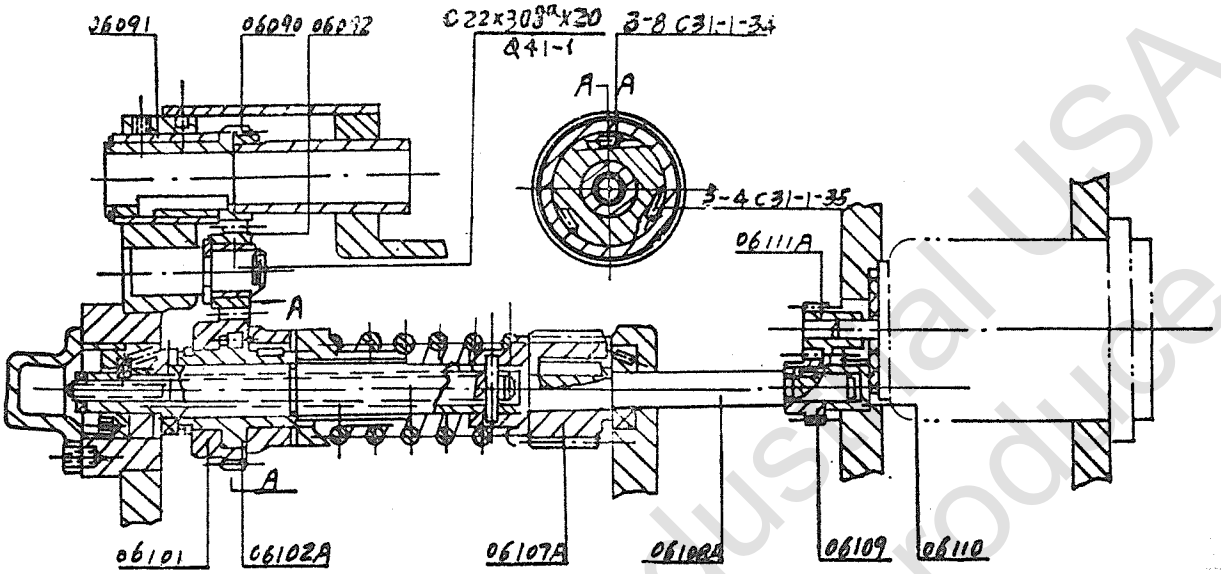

进给箱展开图

Stretched—Out View of Feed Box

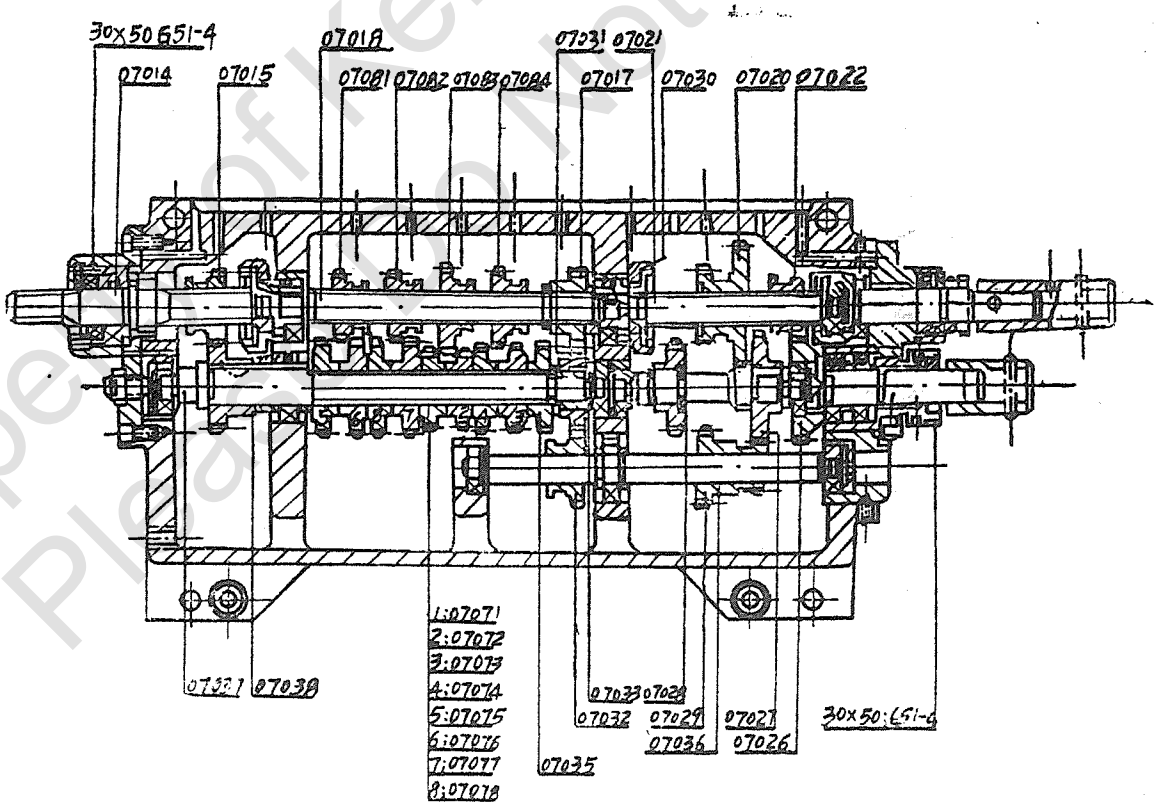

Property of Kent Industrial USA
Please Do Not Reproduce

进 给 箱 操 纵 图

Control Mechanism of Feed Box

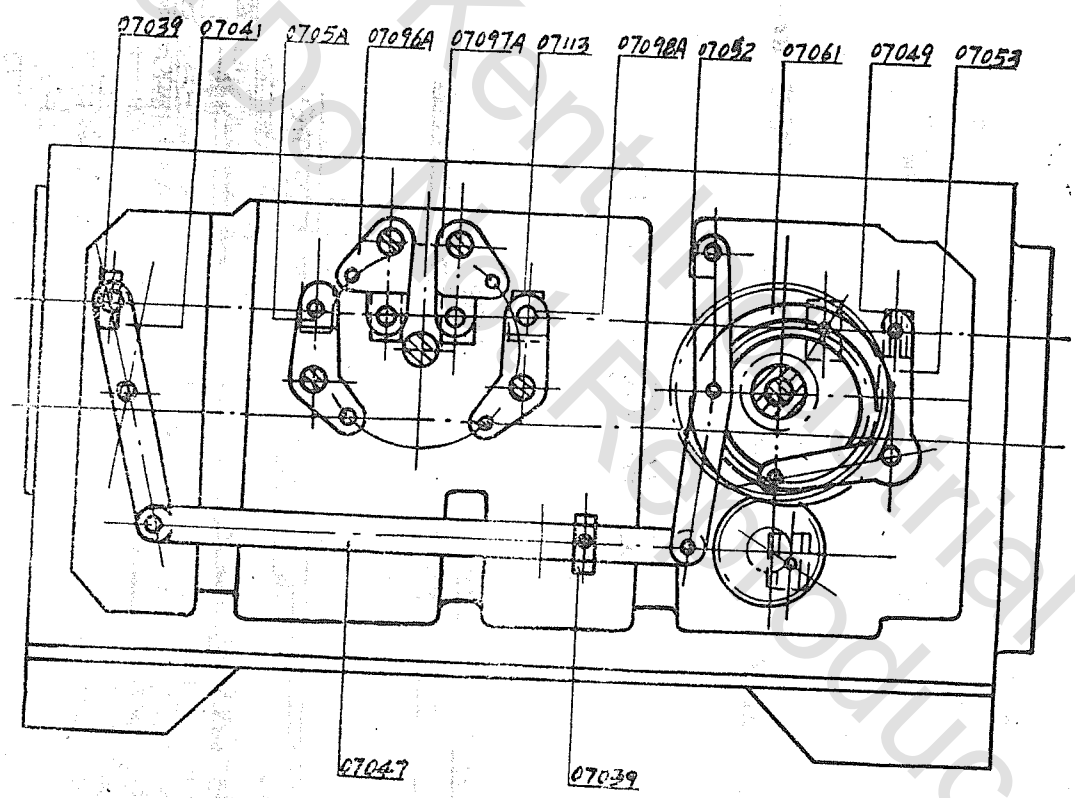

Property of Kentucky Rail Museum USA
Please Do Not Reproduce

挂轮展开图

Stratched—Out View of Change Gears

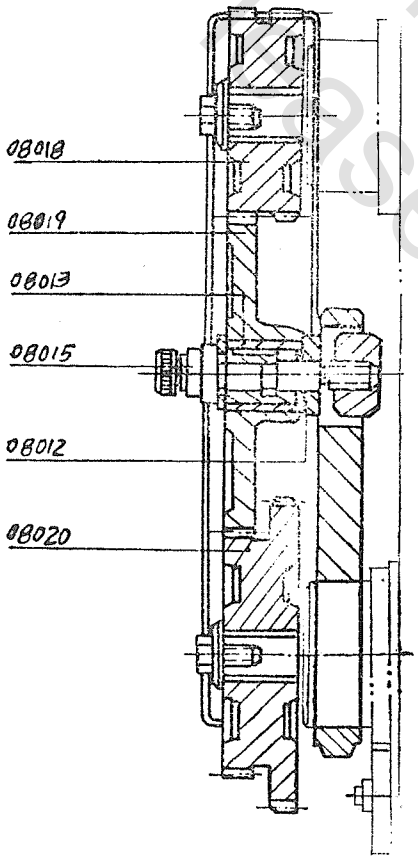

进给箱操纵图

Control Mechanism of Feed Box

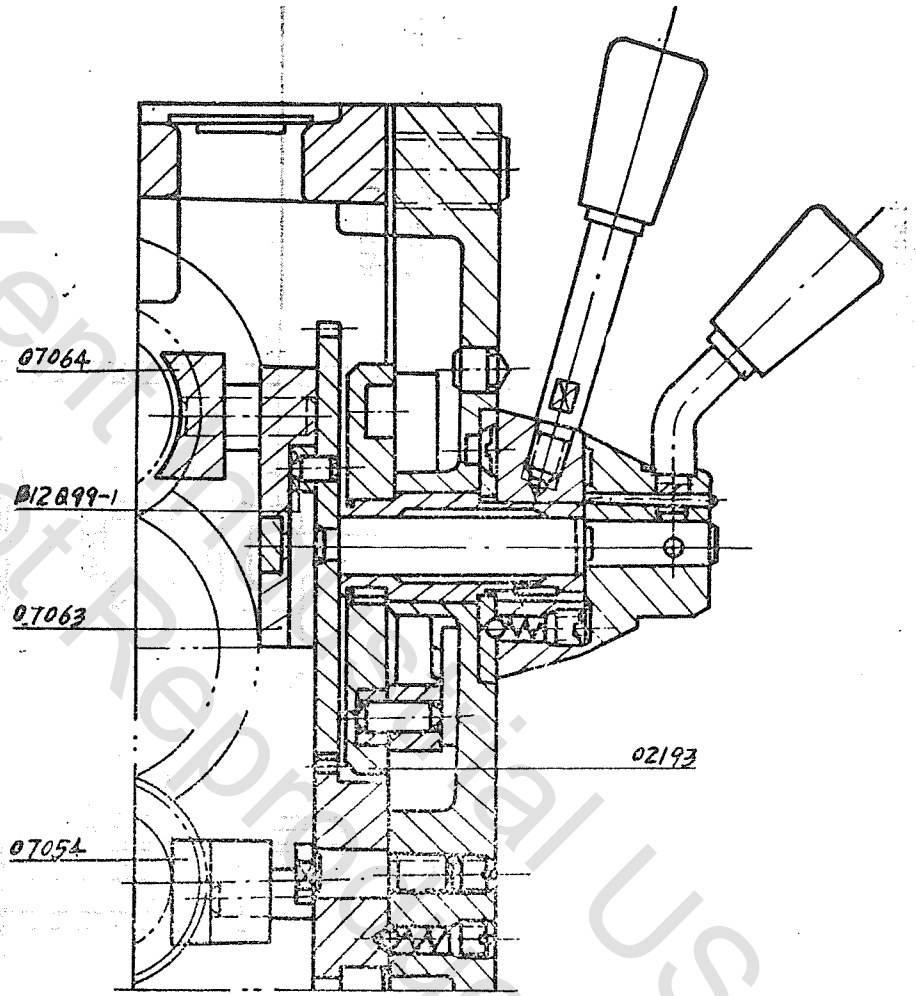

Property of Kent State Metal USA
Please Do Not Reproduce

润 滑 泵 安 装 图

Installation Diagram of Lubricating Pump

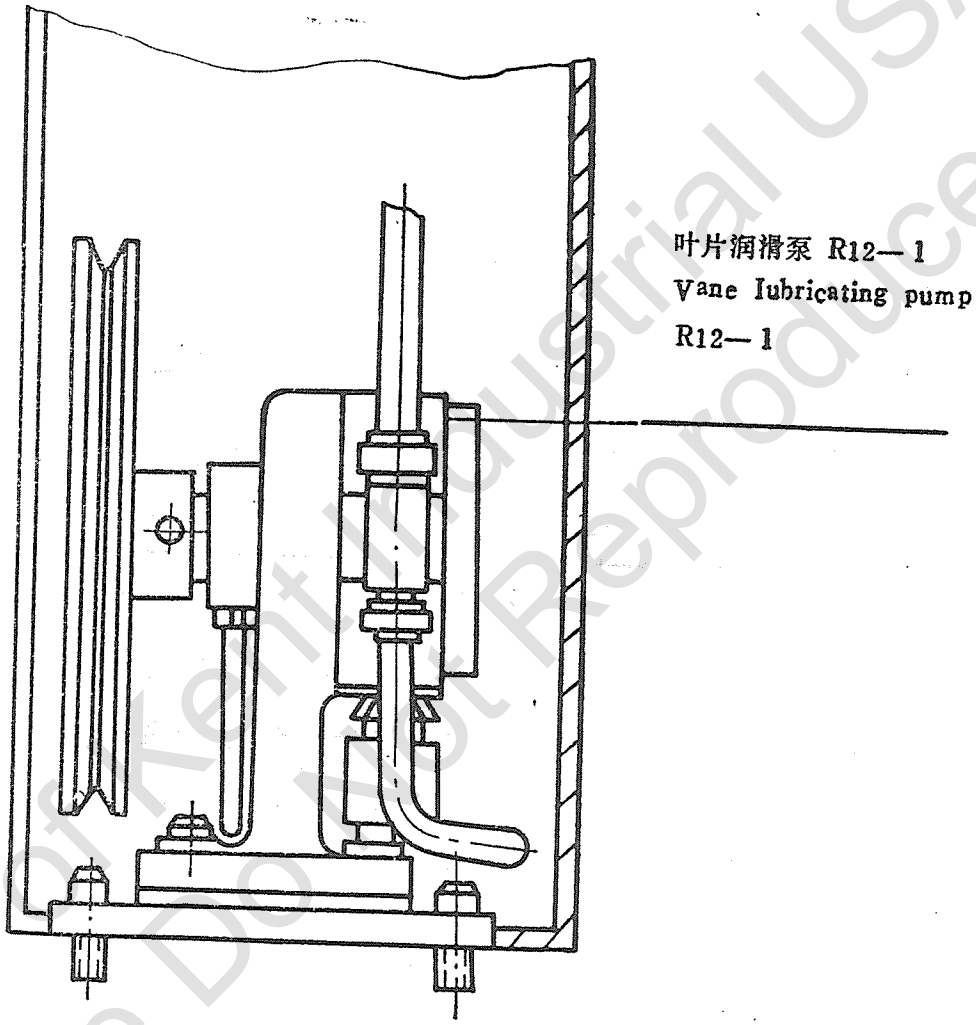

Property of Kent Industrial USA
Please Do Not Reproduce