KENT USA®
Since 1979

KEB-304B
Sinker Type EDM
Maintenance Manual

www.kentusa.com | 1.800.KENT.USA

Table of Contents

Append+

1 Introduction

1.1 Preface

The KEB-304B is a PC-BASED KEB EDM Machine. The EDM System Structure combine with:

1. PC-BASED Controller developed by JS manufacture.
2. Spark power supply hardware developed by JS manufacture.
3. Servo System and Machine Base.

KEB-606 EDM maintenance manual includes:

（1）System structure definition and description.
（2）System structure function and description.
（3）System structure error messages and trouble shooting.

Basic knowledge needed:

（1）Familiar with EDM operation.
（2）Knowledge of basic Electronic and Computer 。
（3）Basic Knowledge of mechanical Structure.
（4）Knowledge of using Multi Meter

1.2 Maintenance Note

Symbol used:

Symbol	Description
⚠ Warning	Might cause damage to technician if not proper use
! Note	Might damage the machine if not correct wiring or incorrect installation.
✎ Hint	Provide the information for service

! Note

＊ ＊Please back up one copy of system parameter.
＊ If there is any system parameters need to be changed, please back up one copy of the original system parameter for future used.

Warning

1. Usually the machine is power on when technician is trouble shooting. Might cause electrical shot if not work carefully.
2. Do not touch the EDM when the machine is cutting. For the high voltage might cause electrical shot.
3. Do not put your hand in the mechanical structure while table is moving.

Hint

＊parameters：
Please set up the proper parameter。
Wrong parameter might cause the machine operate not properly 。Machine parameters are very important setting for correct operation.
＊back up：
Parameter back up is important and necessary

1.2 Tools for Malignance

（1）Multi Meter：Multi Meter is used so often while Maintains.
Digital Multi meter is suggested.
Minimum Requirement:
①Can Check ACV 0~750V
②Can Check DCV 0~250V
③Can Check Ω 0~1MΩ

(2) Screw Driver：Needed when Connect or disconnect wire terminals

（3）Soldering Gun and Solder: Needed when replace electronic elements.

（4）Allen Key and Adjustable Wrench: Needed when assemble machine parts.

（5）Diagonal cutter & long nose pliers

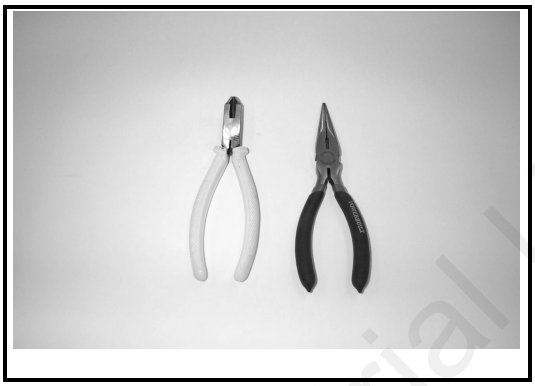

1.3 Maintenance Example

When machine is malfunction, please follow the Maintenance manual for trouble shooting.

Example: “Working light is not ON” Function Failure

You can find “Working light is not ON ” Trouble shooting in Chapter 6.12,

Reference Circuit

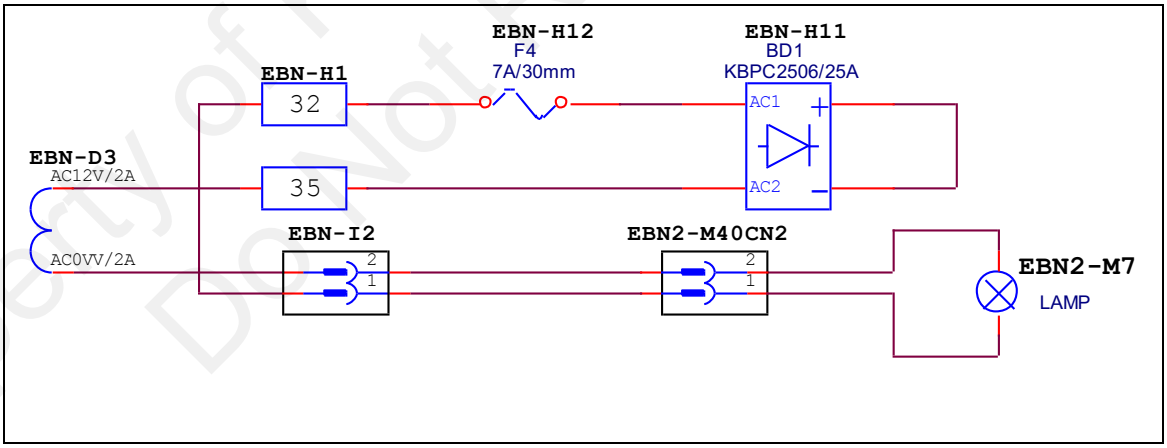

Maintenance flow chart

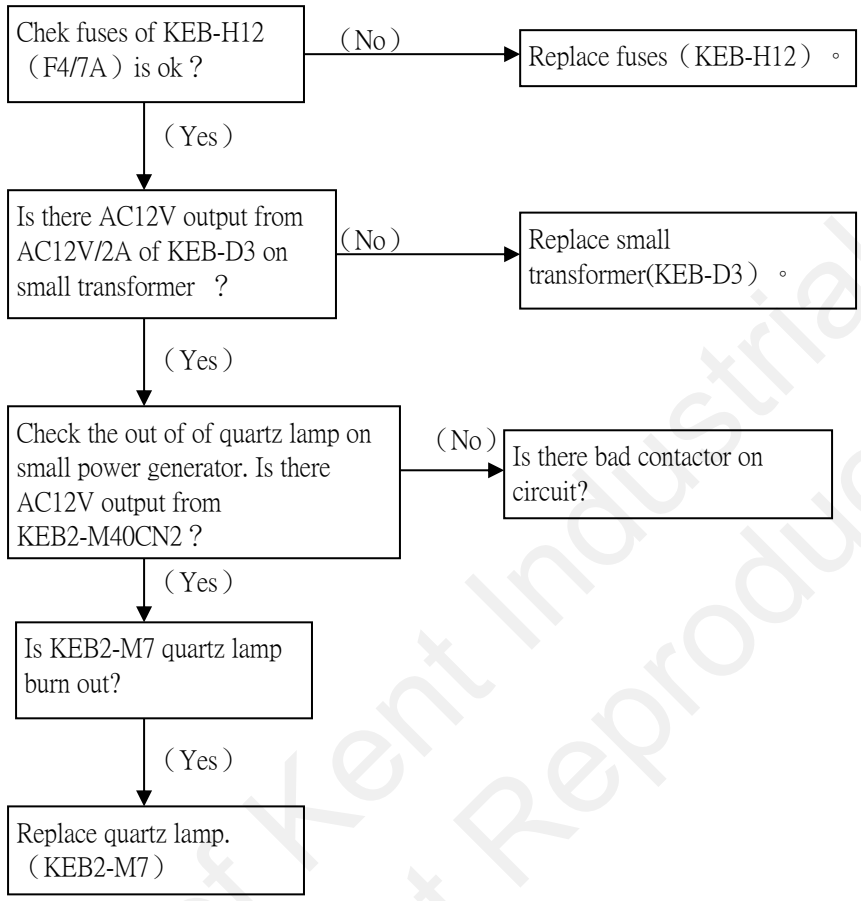

（1）Components symbol description:

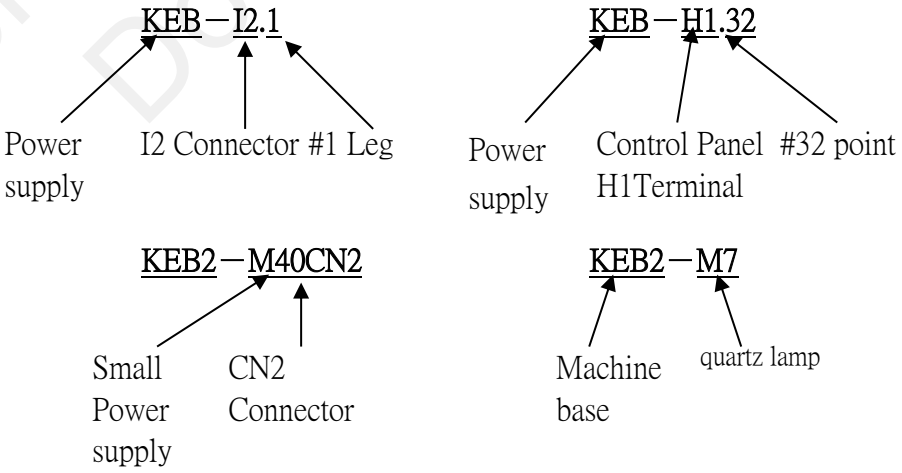

（2）Appendant Drawing is the schematic of KEB-600 EDM：

① KEB-A.DSN－－A Box schematic，includes the wiring of monitor.

② KEB-B.DSN－－B Box schematic，includes the wiring of servo driver.

③ KEB-C1.DSN－－C Box schematic，includes the wiring of controller.

④ KEB-C2.DSN－－C Box schematic，includes the wiring of I/O interface.

⑤ KEB-D.DSN－－D Box schematic，includes the wiring of big and small transformers.

⑥ KEB-E.DSN－－E Box schematic，includes the wiring of all switches and press keys on Front panel.

⑦ KEB-F.DSN－－F Box schematic，includes the wiring of Current Limit frame.

⑧ KEB-G.DSN－－G Box schematic，includes the wiring of transistors box.

⑨ KEB-H1.DSN－－H Box schematic，includes the wiring of Controller circuit.

⑩ KEB-H2.DSN－－H Box schematic，includes the wiring of Spark Control circuit.

⑪ KEB-I.DSN－－I Box schematic，includes the wiring of Side Board connectors.

⑫ KEB2.DSN－－Small electrical Box schematic , includes the wiring of terminals and connectors on small electrical box.

⑬ Machine Base Wiring. DSN－－Schematic of machine base，includes the wiring of all components.

2 KEB EDM Structure Description

2.1 System structure

KEB EDM machine power generator used PC-BASED controller.The system specification is described as follow：

（I）Controller：Industrial PC, Intel DX4-100 CUP is used for:

① I/O interface Data process.

② NC program compile.

③ Motion control

④ Spark control

⑤ motion control card. (X,Y axis control: optional)

⑥ One PULSE & GAP Board。

（II）Servo：One DC SERVO DRIVER is used。

（III）Spark POWER：There are 3 different specifications: 60A、120A、180A

① 60A→One high voltage board, one low voltage board。

② 120A→One high voltage board, two low voltage board。

③ 180A→One high voltage board, 3 low voltage board。

KEB EDM control system structure is shown as Fig. 2.1:

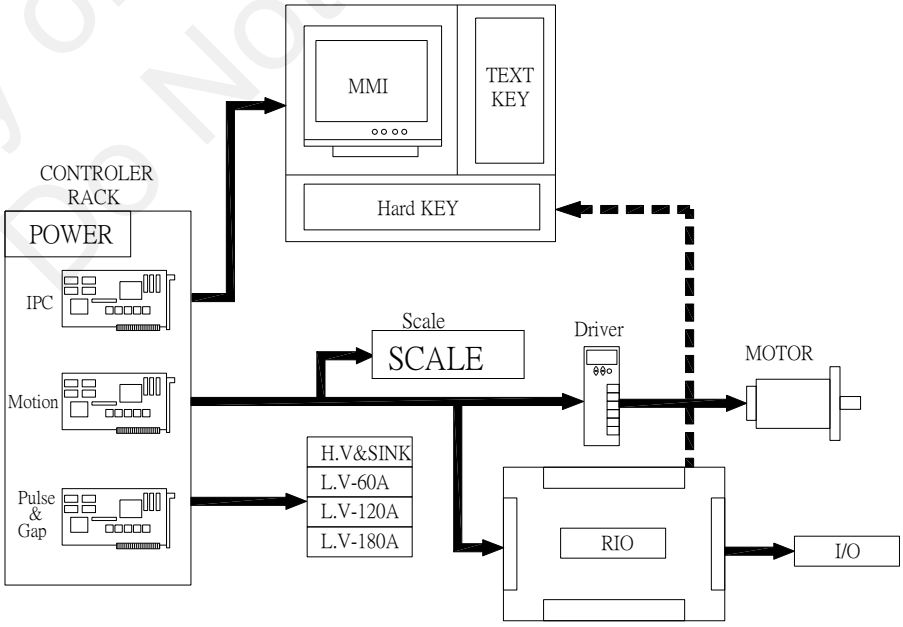

Fig 2.1 KEB EDM System Structure

KEB EDM Spark power structure is shown as Fig. 2.2.

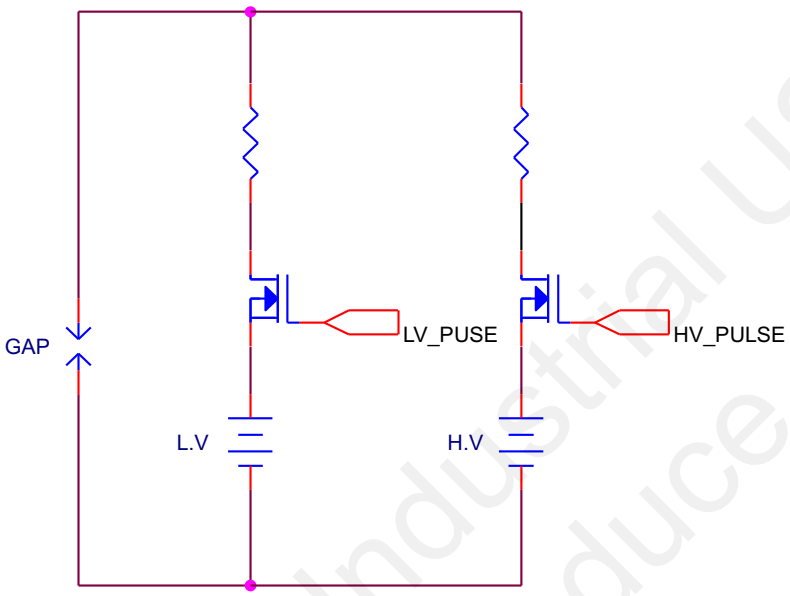

Fig. 2.2 KEB-600 Series. Schematic of Basic Spark Circuit Loop.

2.2 KEB EDM's structure and numbers for each parts

KEB-600 Series: CNC EDM contains of control box and machine base. The controller and servo described above are in control box.

The drawing bellow is the main structure and parts numbers of KEB-600 CNC EDM

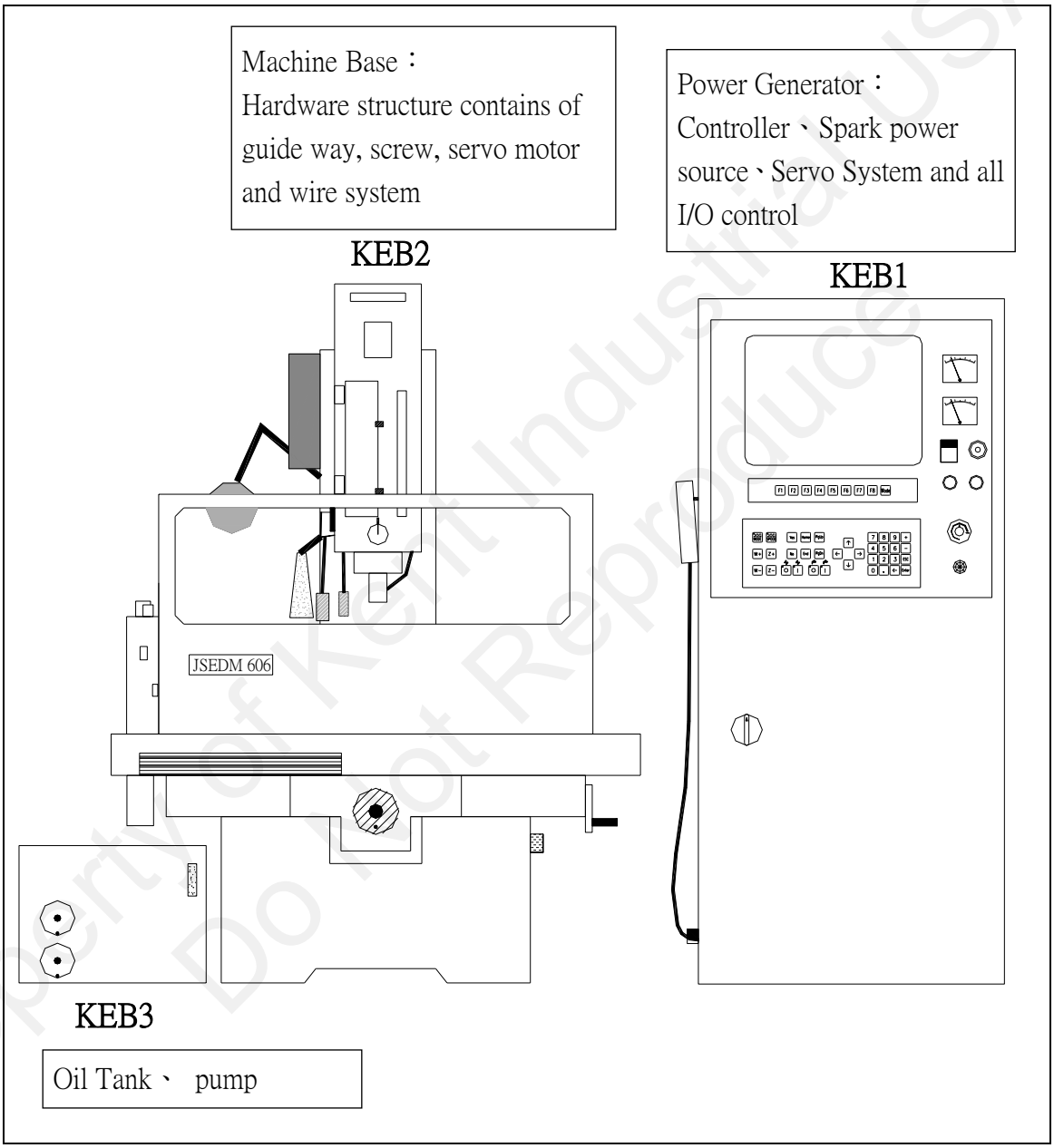

Fig. 2.3 KEB series EDM structure and numbers for each parts

2.2.1 Control box KEB1's structure and numbers for each parts

In spite of Control System and Spark System，Power Generator includes Power supply System and electrical panel . The structure is shown as follow:

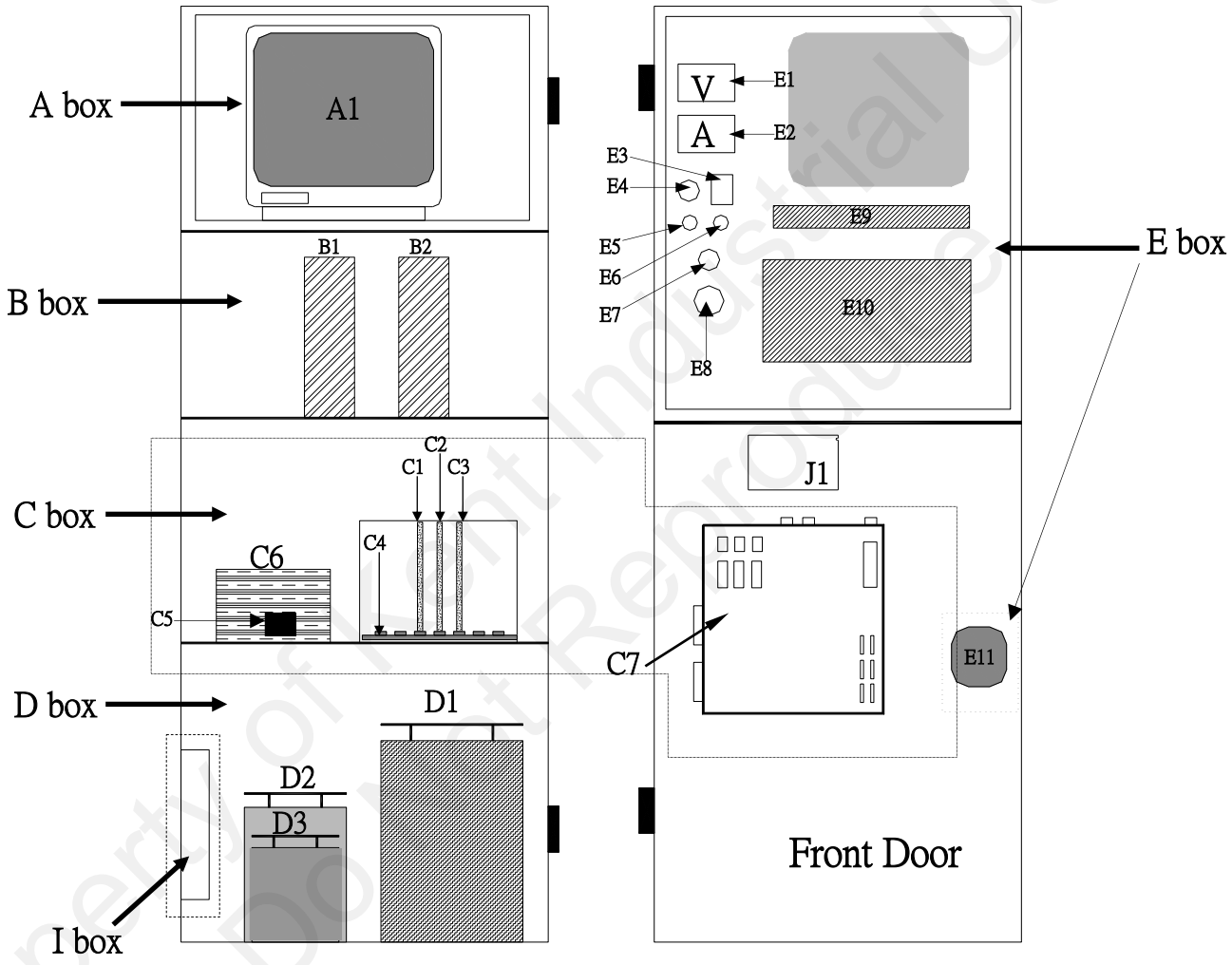

圖 2.3 KEB Front view of control box.

A box ：
①KEB-A1：Monitor

B box ：
①KEB-B1：X Axis motor driver
②KEB-B2：Y Axis motor driver
③KEB-B3：Z Axis motor driver
④KEB-B4：C Axis motor driver

C box ：
①KEB-C1：IPC
②KEB-C2：Pulse＆Gap card
③KEB-C3：Motion card
④KEB-C4：Control board
⑤KEB-C5：Power filter of controller
⑥KEB-C6：Power supply（110V~220V/250W）
⑦KEB-C7：RIO board（IO interface board）

D box ：
①KEB-D1：Large transformer（4.5KVA）
②KEB-D2：Medium transformer（1.5KVA）
③KEB-D3：Small transformer（1.2KVA）

E box ：
①KEB-E1：Volt Meter（0~300V）
②KEB-E2：Amp Meter（0~200A）
③KEB-E3：Monitor switch
④KEB-E4：Emergency Stop（E.STOP）
⑤KEB-E5：【ON】
⑥KEB-E6：【OFF】
⑦KEB-E7：Z Axis servo sensitivity adjustment
⑧KEB-E8：buzzer
⑨KEB-E9：Function keys PC board
⑩KEB-E10：Hard-Key board
⑪KEB-E11：Main Power

KEB-J1：Power source supply（provide power for RIO board）

Following is the rear view of control box：

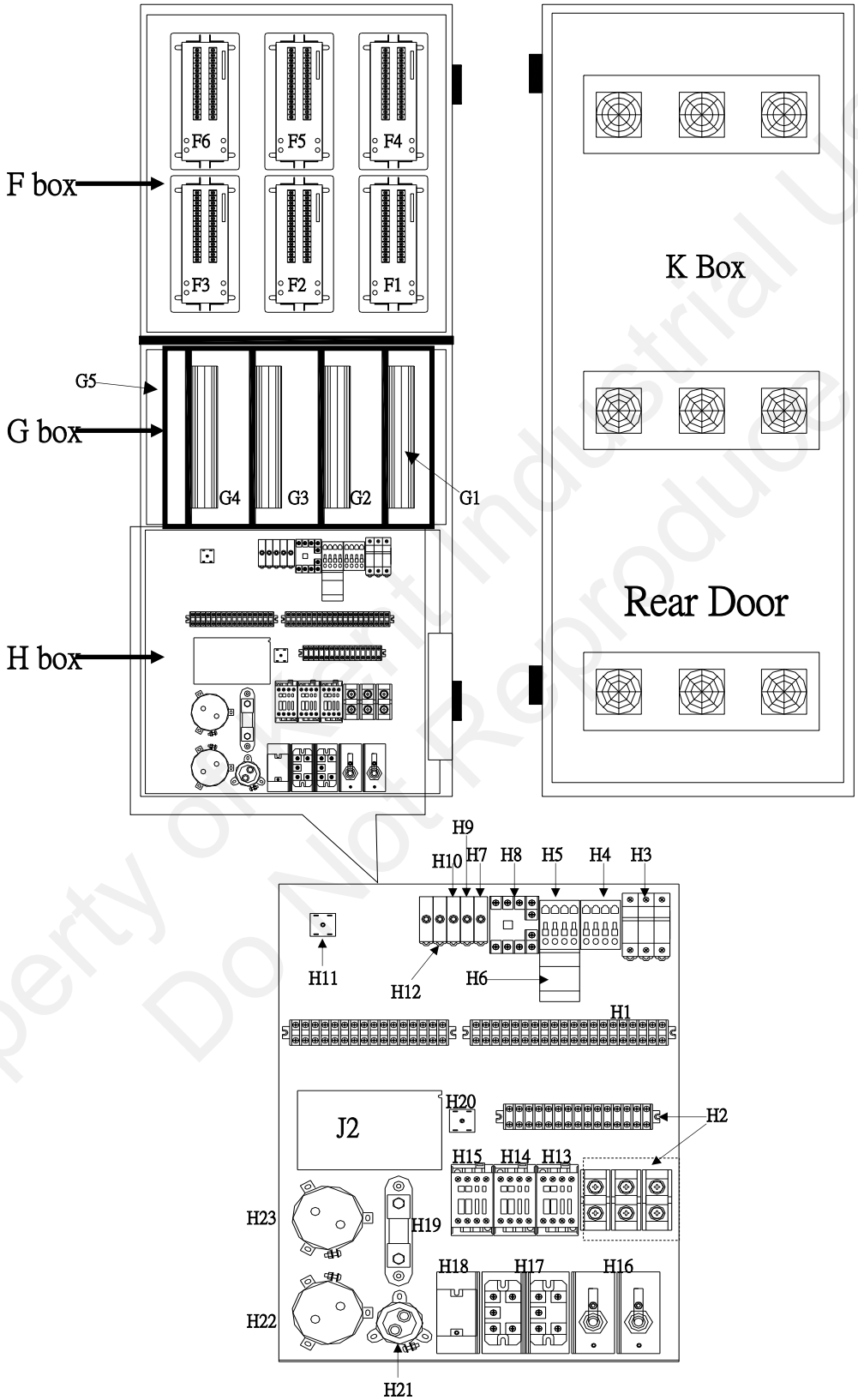

Fig2.4 KEB EDM. Rear view of control box.

F box ：

①KEB-F1：Hi voltage current limit resistor.
②KEB-F2：Low voltage current limit resistor-1（30A）
③KEB-F3：Low voltage current limit resistor -2（60A）
④KEB-F4：Low voltage current limit resistor -3（90A）
⑤KEB-F5：Low voltage current limit resistor -4（120A）
⑥KEB-F6：Low voltage current limit resistor -5（180A）

G box ：

①KEB-G1：Hi voltage board
②KEB-G2：Low voltage board -1（60A）
③KEB-G3：Low voltage board -2（120A）
④KEB-G4：Low voltage board -3（180A）
⑤KEB-G5：G box board（transistor box board）

H box ：

①KEB-H1：terminal-1（36 point）
②KEB-H2：terminal-2（20 point）
③KEB-H3：Fuse-3P/25A（ Main Power）
④KEB-H4：Relay（Control Main Power）
⑤KEB-H5：Relay（Control Pump）
⑥KEB-H6：Overload Relay（Control Pump）
⑦KEB-H7：Fuse-7A（Power of controller）
⑧KEB-H8：Relay（Power of controller）
⑨KEB-H9：Fuse-3A（power of Hi/Low power supply）
⑩KEB-H10：Fuse-3A（power of fans）
⑪KEB-H11：Rectifier
⑫KEB-H12：Fuse-2A（Power of quartz lamp）
⑬KEB-H13：Relay（polarity switch control）
⑭KEB-H14：Relay（Spark Control）
⑮KEB-H15：Relay（Spark control. For 90A and above）
⑯KEB-H16：Diode
⑰KEB-H17：3 phase rectifier（Low voltage spark rectifier）
⑱KEB-H18：3 phase rectifier（Hi voltage spark rectifier）
⑲KEB-H19：Distributor
⑳KEB-H20：Rectifier（2nd Hi Voltage spark rectifier）
㉑KEB-H21：Capacitor（HiV Spark Filter）
㉒KEB-H22：Capacitor（LowV Spark Filter）
㉓KEB-H23：Capacitor（LowV Spark Filter. For 90A and above）

KEB-J2：Power Supply（Provide power for High and Low voltage board）

Side View of Control Box：

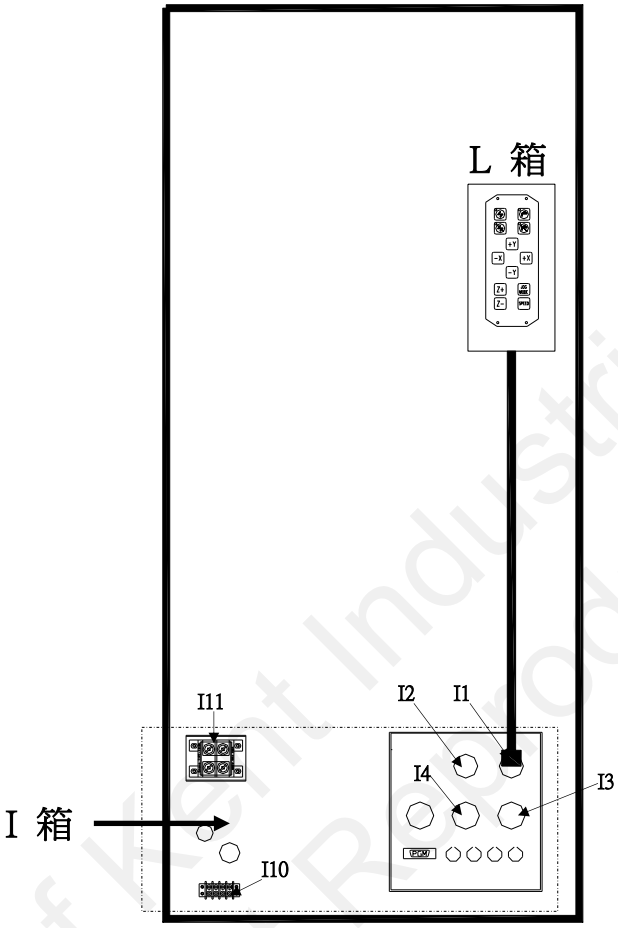

Fig. 2.5 KEB. Side View of Control Box

I box ：

①KEB-I1：Remote control connector
②KEB-I2：Machine base wiring connector-1（16 PIN）
③KEB-I3：Machine base wiring connector-2（24 PIN）
④KEB-I4：CE connector
⑤KEB-I10：Main power connect terminal
⑥KEB-I11：Polarity connect terminal

L box ：Remote control

2.2.2 Machine Base KEB2's structure and numbers for each parts

Following picture is Machine Base Structure for CNC EDM，This Machine Base has 3 DC servo Motor ，Control the motions of X、Y、Z axis

Machine Base: Components locations, numbers and definition：(Machine Base symbol: M)。

Front view of Machine base：

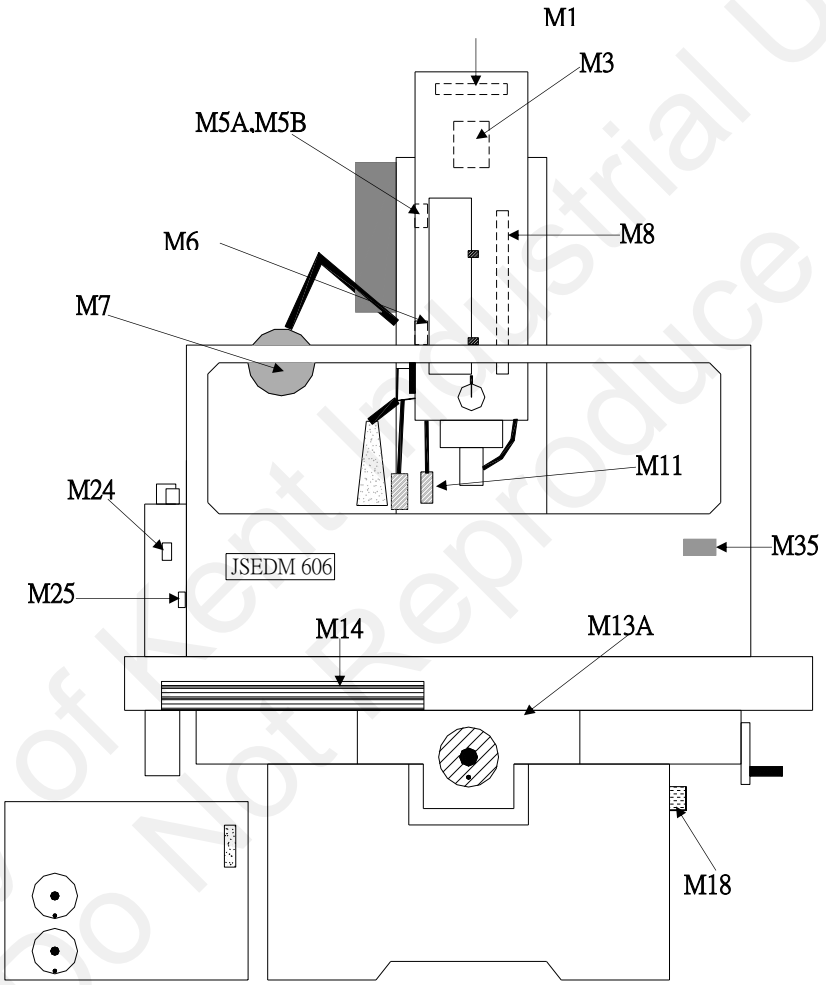

KEB2：Machine base（M box ）-Front View

①KEB2-M1A：terminal-1
②KEB2-M3：Z axis DC servo motor
③KEB2-M5A：Z axis hardware + limit Switch
④KEB2-M5B：Z axis software + limit Switch
⑤KEB2-M6：Z axis hardware - limit Switch
⑥KEB2-M7：Quartz light
⑦KEB2-M8：Z axis DRO
⑧KEB2-M11：Fire sensor
⑨KEB2-M14：X axis DRO
⑩KEB2-M18：Y axis DRO
⑪KEB2-M24：synchronize flush
⑫KEB2-M25：Level Switch
⑬KEB2-M35：Oil Tank Door Limit Switch（CE Specific）

Machine Rear View：

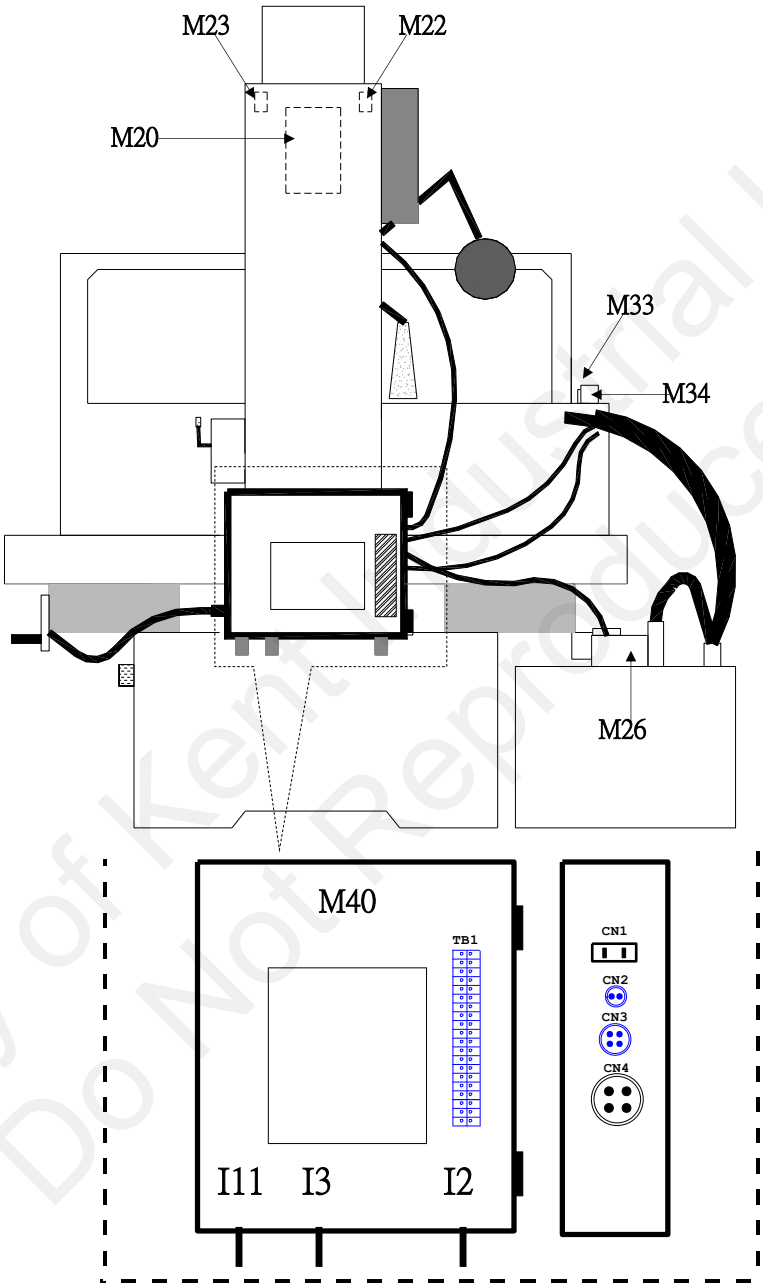

KEB2：Machine base（M box ）- Rear view

①KEB2-M20：W axis AC motor
②KEB2-M22：W axis limit switch-up
④KEB2-M23：W axis limit switch-down
⑤KEB2-M26：Inlet of Pump
⑥KEB2-M33：CE Emergency Stop
⑦KEB2-M34：CE Temp. Control switch
⑧KEB2-M40：Small Control box
CN1：AC110 connector
CN2：Quartz lamp connector
CN3：Synchronize flush and level switch connectors
CN4：Pump connector
TB1~TB4：terminal

3 Wiring Description

In this section, we provide detail description of Control Panel（KEB-H box）、RIO board（KEB-C7）、Connector of Side Board（KEB-I Box）、Small electrical box（KEB-M40）and Terminal on Machine base（KEB-M1).

3.1 Wiring of Control panel（KEB-H Box）

Control Panel controls and provides power for all electrical Boxes, includes: Controller 、Spark 、 Servo Motor and convert power supply.
For Terminal（KEB-H1）：Receives Voltage Output from Transformer，through the control loop of Control Panel，then Output to controller、convert type power supply, etc.
For Terminal（KEB-H2）：Power control and Voltage, Current detect while Sparking.

✐ Hint

＊Refer to schematic of KEB-H Box.
＊Refer to Chapter 2 KEB-H box's components location and description

（1）Wiring description of Terminal（KEB-H1）：

H1.1：Connect Main power Switch（KEB-E11）Output-R。
H1.2：Connect Main power Input（KEB-E11）Output-S。
H1.3：Connect Main power Input（KEB-E11）Output-T。
H1.4：Connect Small Transformer（KEB-D3） Input side AC0V。
H1.5：Connect Small Transformer（KEB-D3） Input side AC220V~AC415V。
H1.6：Connect RIO Board（KEB-C7）: JP1.1。
H1.7：Connect RIO Board（KEB-C7）: JP1.2。
H1.8：Connect Large Transformer（KEB-D1）Input SideR/AC220V~415V。
H1.9：Connect Large Transformer（KEB-D1）Input Side S/AC220V~415V。
H1.10：Connect Large Transformer（KEB-D1） Input Side T/AC220V~415V。
H1.11：Connect RIO Board（KEB-C7）: JP1.9。
H1.12：Connect RIO Board（KEB-C7）: JP1.10。
H1.13：①Connect Side Board Connector（KEB-I2）PIN3---PUMP Power-R。
②Connect Medium Transformer（KEB-D2） Input side AC0V。
H1.14：Connect Side Board Connector（KEB-I2）PIN4---PUMP power-S。

H1.15：①Connect Side Board Connector（KEB-I2）PIN5---PUMP power-T。
②Connect Medium Transformer（KEB-D2） Input Side AC220V~415V。
H1.16：Connect Small Transformer（KEB-D3）Output Side AC110V/6A（0V）。
H1.17：Connect Small Transformer（KEB-D3）Output side AC110V/6A（110V）。
H1.18：Connect Small Transformer（KEB-D3）Output Side AC110V/2A（0V）。
H1.19：Connect Small Transformer（KEB-D3）Output Side AC110V/2A（110V）。
H1.20：Connect RIO Board（KEB-C7）: JP1.19。
H1.21：Connect RIO Board（KEB-C7）: JP1.20。
H1.22：Connect Panel ON Key（KEB-E5）Connect point# 3。
H1.23：Connect Panel ON Key（KEB-E5）Connect point #4。
H1.24：Connect Medium Transformer（KEB-D2）Output side AC220V/1.5A（0V）
H1.25：Connect Medium Transformer（KEB-D2）Output side AC220V/1.5A（220V）
H1.26：①Connect Controller Power Filter（KEB-C5）: LINE-1。
②Connect RIO Board Convert type power supply（KEB-J1）: InputAC-1。
③Connect Side BoardKEB-I2.7，AC0V。
H1.27：①Connect Controller Power Filter（KEB-C5）: LINE-2。
②Connect RIO Board Convert type power supply（KEB-J1）: InputAC-2。
H1.28：Connect L.V&H.V Board Convert type power supply（KEB-J2）: InputAC-1。
H1.29：Connect L.V&H.V board Convert type power supply（KEB-J2）: InputAC-2。
H1.30：Connect power of Fan（KEB-K box） InputAC-1。
H1.31：Connect power of Fan（KEB-K Box） InputAC-2。
H1.32：Connect Side Board Connector（KEB-I2）PIN1---Quartz Light 0V。
H1.33：Connect RIO Board（KEB-C7）: JP5.9。
H1.34：Connect RIO Board（KEB-C7）: JP5.10。
H1.35：Connect Small Transformer（KEB-D3）Output Side AC12V/1.5A（0V）。

（2）Wiring description of terminal（KEB-H2）：
H2.41：Connect RIO Board（KEB-C7）: JP1.5。
H2.42：Connect RIO Board（KEB-C7）: JP1.6。

H2.43：Connect RIO Board（KEB-C7）: JP1.7。
H2.44：Connect RIO Board（KEB-C7）: JP1.8。
H2.45：Connect RIO Board（KEB-C7）: JP1.1。
H2.46：Connect RIO Board（KEB-C7）: JP1.2。
H2.47：①Connect Volt meter（KEB-E1）:＋ End
②Connect MOTION card（KEB-C2）: JP2.2。
H2.48：①Connect Volt meter（KEB-E1）的－End
②Connect MOTION card（KEB-C2）: JP2.3。
H2.49：Connect Amp meter（KEB-E2）的＋End
H2.50：Connect Amp meter（KEB-E2）的－End

H2.51：Connect Transistor Board（KEB-G5）: S24 point
H2.52：Connect Transistor Board（KEB-G5）: S10 point
H2.53：Connect Transistor Board（KEB-G5）: S1 point。
H2.54：Connect Transistor Board（KEB-G5）: S2 point。
H2.55：Connect HV Current Limit frame（KEB-F1）: S1 point。
H2.56：Connect Transistor Board（KEB-G5）: S6 point。
H2.57：Connect Transistor Board（KEB-G5）: S7 point。
H2.58：Connect LV Current Limit frame（KEB-F2）: S1 point。

3.2 Wiring of RIO Board（KEB-C7）

RIO Board provides the Output and Input function for KEB Series EDM machine. In spite of the Input/Output signal of operation Panel，all other Input and Output signals are process by RIO Board，such as Limit Switch、Polarity switch、Fire Alarm Signal 、 Short circuit Signal and etc.

Output/Input Signals of RIO Board are connected to the socket（JP1~JP12）.

JP1.7 means Pin7 point on socket JP1.

✐ Hint

＊Refer to schematic of KEB-C7
＊Refer to Chapter 2 KEB-C Box components location and description

（1）Wiring description of socket JP1：

JP1.1：Connect Control Panel KEB-H1.6，Power On Signal 。
JP1.2：Connect Control Panel KEB-H1.7，Power On Signal 。
JP1.3：Connect coil of relay （only CE）。
JP1.4：Connect coil of relay （only CE）。
JP1.5：Connect Control Panel KEB-H1.41， Spark ON Signal 。
JP1.6：Connect Control Panel KEB-H1.42， Spark ON Signal 。
JP1.7：Connect Control Panel KEB-H1.43，Polarity switch Signal 。
JP1.8：Connect Control Panel KEB-H1.44，Polarity switch Signal 。
JP1.9：Connect Control Panel KEB-H1.11，PUMP On Signal 。
JP1.10：Connect Control Panel KEB-H1.12，PUMP On Signal 。
JP1.11：Fast oil PUMP On Signal（Only 707~909）。
JP1.12：Fast oil PUMP On Signal（Only 707~909）。
JP1.13：Connect Side BoardKEB-I2.9，W axis UP Signal 。
JP1.14：Connect Side BoardKEB-I2.8，W axis common point。
JP1.15：Connect Side BoardKEB-I2.10，W axis Down Signal 。
JP1.16：Open Loop。
JP1.17：Open Loop。
JP1.18：Open Loop。
JP1.19：Connect Control Panel KEB-H1.20，POWER ON Signal 。
JP1.20：Connect Control Panel KEB-H1.21，POWER ON Signal 。

（2）Wiring description of socket JP2：

JP2.1：Connect Control Panel KEB-H2.45， Short circuit Signal ＋point。
JP2.2：Connect Control Panel KEB-H2.46， Short circuit Signal －point。

（3）Wiring description of socket JP5:

JP5.1：Connect Oil Tank Door Limit Switch（Only CE Specific）。
JP5.2：Connect Oil Tank Door Limit Switch（Only CE Specific）。
JP5.3：Open Loop。
JP5.4：Connect Side BoardKEB-I2.14， Synchronize Flush Signal 。
JP5.5：Open Loop。
JP5.6：Connect Side BoardKEB-I2.13， Level Switch。
JP5.7：Open Loop。
JP5.8：Connect Side BoardKEB-I2.16，FIRE ALARM。
JP5.9：Connect Control Panel KEB-H1.33，FIRE ENABLE（＋）。
JP5.10：Connect Control Panel KEB-H1.34，FIRE ENABLE（－）。
JP5.11：Open Loop。
JP5.12：Connect Side BoardKEB-I2.15，Z axis ⊕ Limit Signal 。
JP5.13 ＆JP5.14：SHORT。
JP5.15： Open Loop。
JP5.16： Open Loop。

（4）Wiring description of socket JP8：

JP8.1：Connect Side BoardKEB-I2.11，DC+24V。
JP8.2：Connect Side BoardKEB-I2.12，GND。

（5）Wiring description of socket JP12：

JP12.1：①point for Connecting E. STOP Switch（KEB-E3）on panel。
JP12.2：②point for Connecting E.STOP Switch（KEB-E3）on panel。
JP12.3：Connect Buzzer （KEB-E8）的＋End。
JP12.4：Connect Buzzer （KEB-E8）的－End
JP12.5：①point for Connecting【OFF】 Key（KEB-E6）on panel。
JP12.6：②point for connecting 【OFF】 Key（KEB-E6）on panel。

（6）Wiring description of other sockets：

JP3：Connect Side BoardKEB-I1，Remote Box singal。
JP4：Connect JP3 of MOTION Board。
JP11：Extra I/O point。

3.3 Wiring of Side Board Connector ：

Side Board（KEB-I Box）is to connect Small Electrical Box on Machine Base to Control Box。Through the Side Board can control the motion of machine base, DRO feedback, pump ON/OFF and I/O Signal of machine base. Side Board Connector is marked as KEB-I.
Example: I2.4 means PIN4 on Connector I2.
I1: connector to remote control box.
I4: Special design for the connector of CE model.
I3 is DRO（X、Y、Z）Connector；
Following is the wiring description of Connector I2 to Small Electrical Box （KEB-M40）on machine base.

✐ Hint

＊Refer to the schematic of KEB-I Box。
＊Refer to Chapter 2 KEB-I box's components location and description

（1）Wiring description of I2 Connector：

I2.1：Connect to CN2.1 on Small Electrical Box （KEB2-M40）， Quartz lamp/AC12V。

I2.2：Connect to CN2.2 Small Electrical Box （KEB2-M40）， Quartz lamp/AC0V。

I2.3：Connect to CN4.1 on Small Electrical Box （KEB2-M40），PUMP Power（R）。

I2.4：Connect to CN4.2 on Small Electrical Box （KEB2-M40），PUMP Power（S）。

I2.5：Connect to CN4.3 on Small Electrical Box （KEB2-M40），PUMP Power（T）。

I2.6：Connect to TB1.20 on Small Electrical Box （KEB2-M40），PUMP Ground

I2.7：Connect to CN1.2 on Small Electrical Box（KEB2-M40），AC110V。

I2.8： ① Connect to CN1.1 on Small Electrical Box （KEB2-M40），AC0V。
② Connect to TB1.1 on Small Electrical Box （KEB2-M40），W axis common point。

I2.9：Connect to TB1.2 on Small Electrical Box （KEB2-M40），W axis UP Signal 。

I2.10：Connect to TB1.3 on Small Electrical Box （KEB2-M40），W axis Down Signal 。

I2.11：Connect to CN3.1 on Small Electrical Box（KEB2-M40），DC24V。

I2.12：① Connect to CN3.2 on Small Electrical Box （KEB2-M40），DC0V。

② Connect to TB1.4 on Small Electrical Box（KEB2-M40），FIRE ALARM ⊕ END。

I2.13：Connect to CN3.3 on Small Electrical Box （KEB2-M40）， Level Switch。

I2.14：Connect to CN3.4 on Small Electrical Box （KEB2-M40），Synchronize Flush Signal 。

I2.15：Connect to TB1.5 on Small Electrical Box （KEB2-M40），Z axis ⊕ Limit Signal 。

I2.16：Connect to TB1.4 on Small Electrical Box （KEB2-M40），FIRE ALARM ⊖ END。

（2）Wiring description of I3Connector：

I3.1：Connect to TB1.7 on Small Electrical Box （KEB2-M40），Z axis Motor Power ⊕End。

I3.2：Connect to TB1.8 on Small Electrical Box （KEB2-M40），Z axis Motor Power ⊖End。

I3.3：Connect to TB1.9 on Small Electrical Box （KEB2-M40），Z axis TG ⊕End。

I3.4：Connect to TB1.10 on Small Electrical Box （KEB2-M40），Z axis TG ⊖End。

I3.5：Connect to TB1.11 on Small Electrical Box （KEB2-M40），Z axis Protect common point。

I3.6：Connect to TB1.12 on Small Electrical Box （KEB2-M40），Z axis ⊕ Protect Signal。

I3.7：Connect to TB1.13 on Small Electrical Box （KEB2-M40），Z axis ⊖ Protect Signal。

3.4 Wiring of Terminal in Small Electrical Box of Machine Base：

The main function of Small Electrical Box （KEB2-M40）is to connect the power source and control signals between Electrical Box （KEB1） and Machine Base（KEB2）, and easy for connecting and trouble shooting.

✐ Hint

＊Refer to schematic of small electrical box
＊Refer to Chapter 2 KEB2-M40 box: Component location and description

（1）Wiring description of TB1 terminal：

TB1.1：W axis common point.
TB1.2：W axis UP signal.
TB1.3：W axis DOWN signal.
TB1.4：Fire detector Signal ＋End.
TB1.5：Z axis ＋ Limit Switch Signal.
TB1.6：Fire detector Signal －End.
TB1.7：Z axis Motor＋End.
TB1.8：Z axis Motor－End.
TB1.9：Z axis Motor TG＋End.
TB1.10：Z axis Motor TG－End.
TB1.11：Z axis Protect Switch common point.
TB1.12：Z axis ＋ Protect Switch Signal.
TB1.13：Z axis － Protect Switch Signal.

3.5 Wiring of terminal on Machine Base：

✐ Hint

＊Refer to the schematic of Machine base Wiring。
＊Refer to Chapter 2 KEB2-M Box: Components location and Description。

The wiring of terminal (KEB2-M1) is described as following：

M1.1：Z axis Motor＋End.
M1.2：Z axis Motor－End.
M1.3：Z axis Motor TG＋End.
M1.4：Z axis Motor TG－End.
M1.5：Z axis Protect Switch common point.
M1.6：Z axis ＋ Protect Switch Signal.
M1.7：Z axis － Protect Switch Signal.
M1.8：① Z axis Limit Switch common point.
② Fire Detector Signal －End.
M1.9：Z axis ＋ Limit Switch Signal.
M1.10：Fire Detector Signal ＋End.

4 Input/ Output（I/O） Description

The I/O status will show on the screen for trouble shooting。

4.1 I/O Display

I/O Displace：

（1）Press【ESC】key under Main Screen and Enter to System Screen.

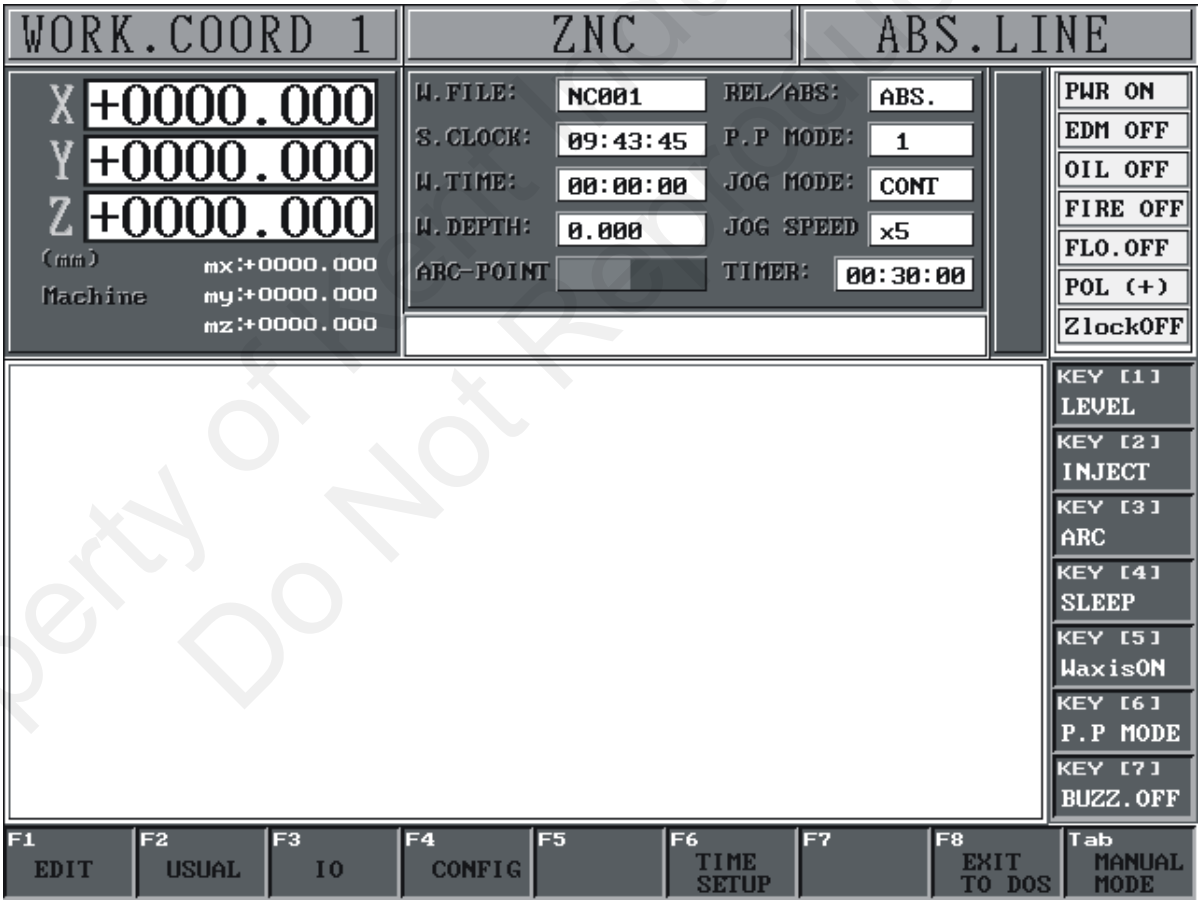

Fig 4.1 System Screen

（2）Press【F3 I/O】key and the I/O status is shown on screen.

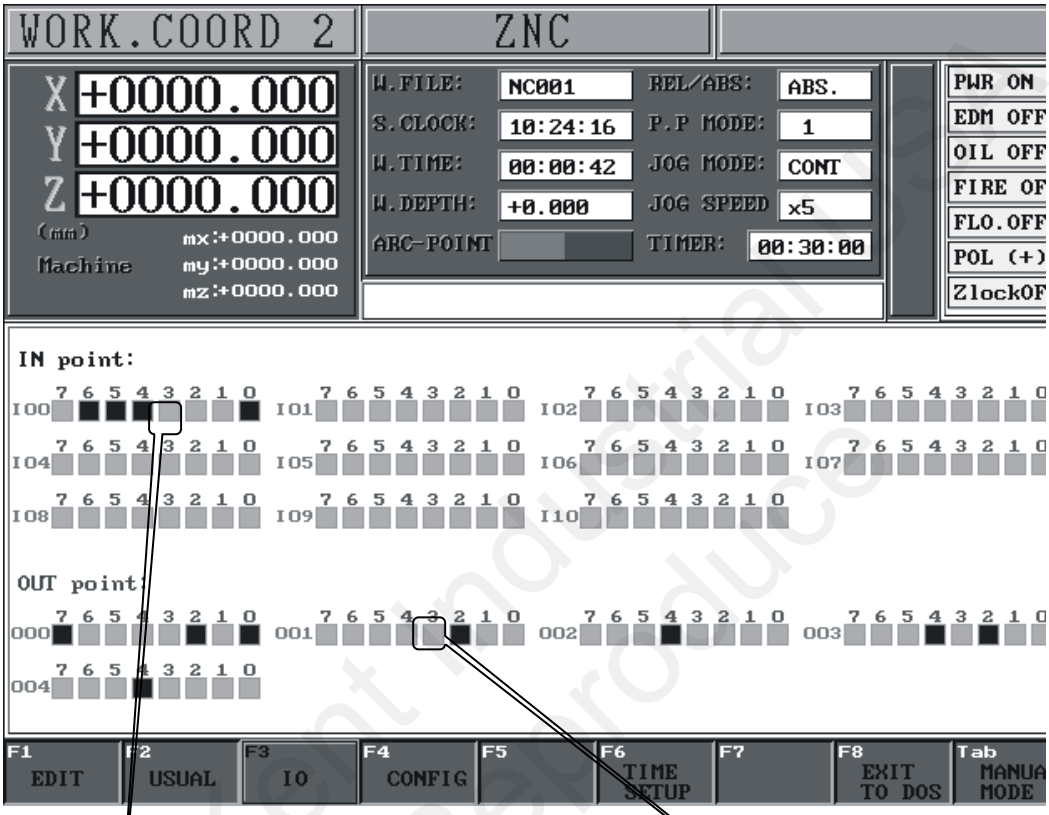

Fig 4.2 I/O Screen

Address：I00.3。
Definition：Level switch Signal

Address：O01.3。
Definition：Synchronized

✎ Hint

The I/O Screen shown above is:
■: Active
□: Not Active

4.2 Definition of I/O

I BIT（Input） Definition and Address

	BIT 7	BIT 6	BIT 5	BIT 4	BIT 3	BIT 2	BIT 1	BIT 0
BYTE 0	Short Signal	OFF Key	Z- Limit Switch	Z+ Limit Switch	Level Switch	Oil Tank Door Switch	UPS OFF Signal	E.STOP Key
LED Display	LED31	LED29	LED24	LED21	LED30	LED28	LED26	LED3,23
BYTE 1	×	×	Fire Alarm Signal	XY Axis motor ON	Reserved Input 4	Reserved Input 3	Reserved Input 2	Reserved Input 1
LED Display	*	*	LED1	LED33	LED32	LED27	LED25	LED22
BYTE 2	Front Panel Number 7	Front Panel Number 6	Front Panel Number 5	Front Panel Number 4	Front Panel Number 3	Front Panel Number 2	Front Panel Number 1	Front Panel Number 0
LED Display	*	*	*	*	*	*	*	*
BYTE 3	×	+/-	End	PgDn	NO	•	Front Panel Number 9	Front Panel Number 8
LED Display	*	*	*	*	*	*	*	*
BYTE 4	×	×	W-	W+	W Axis ON	Z-	Z+	Z axis Fast UP
LED Display	*	*	*	*	*	*	*	*
BYTE 5	YES	Home	PgUp	Pump ON	Pump OFF	Spark ON	Spark OFF	F8
LED Display	*	*	*	*	*	*	*	*
BYTE 6	ENTER	CLEAR	-	+	RIGHT	LEFT	DOWN	UP
LED Display	*	*	*	*	*	*	*	*
BYTE 7	F7	F6	F5	F4	F3	F2	F1	ESC
LED Display	*	*	*	*	*	*	*	*
BYTE 8	Remote Control Box Slow Z-	Remote Control Box Slow Z+	Remote Control Box Fast Z-	Remote Control Box Fast Z+	Remote Control Box Pump OFF	Remote Control Box Pump ON	Remote Control Box Spark OFF	Remote Control Box Spark ON
LED Display	*	*	*	*	*	*	*	*

BYTE9	×	×	×	×	Remote Control Box Y-	Remote Control Box Y+	Remote Control Box X-	Remote Control Box X+
LED Display	＊	＊	＊	＊	＊	＊	＊	＊

※Note：『＊』means no LED Display

O BIT（Output）Definition and Address

	BIT 7	BIT 6	BIT 5	BIT 4	BIT 3	BIT 2	BIT 1	BIT 0
BYTE 0	Z Axis Break	H. Pump Motor	Pump	Neg. Polarity Spark	Positive Polarity Spark	Main Spark Power	External Power switch	E.STOP Control
LED Display	LED15	LED10	LED9	LED7	LED6	LED5	LED4	LED3,23
BYTE 1	×	×	×	×	Synchronize Flush	XY Axes Driver	W Axis Down	W Axis UP
LED Display	＊	＊	＊	＊	LED13	LED16	LED12	LED11
BYTE 2	Reserved Output 2	Reserved Output 1	Buzzer	XY Axis Servo Motor lock	Y- axis Motion	Y+ axis Motion	X- axis Motion	X+ axis Motion
LED Display	＊	＊	＊	LED19	LED20	LED18	LED17	LED14
BYTE 3	×	×	Pump ON LED	Pump OFF LED	Spark ON LED	Spark OFF LED	Z Axis Fast up LED	W Axis ON LED
LED Display	＊	＊	＊	＊	＊	＊	＊	＊

※ Note：『＊』 means no LED Display

4.3 Application of I/O（Use I/O to check Circuit）

（1）Example 1: Use INPUT to check Circuit

INPUT Address：I00.4：

Address I00.4 is Z+ Limit. When Z+ axis limit is not trigged, □ is shown in the address I00.4. When Z＋ axis limit is trigged, ■ is shown in address I00.4. （address I00.4 LED Display from □→■）。If Address I00.4 is shown as above, it means the circuit of Z＋ limit is normal.

If Z＋ limit is not trigged and ■ is shown in Address I00.4, it means there is short circuit in Z＋ limit. Please refer to Chapter 2 and find out the Z＋ limit switch. Base on the schematic for trouble shooting till□ is shown in address I00.4

（2）Example 2：Use OUTPUT to check Circuit

OUTPUT Address：O00.5：

Address O00.5 is output Signal of Oil Pump. When■ is shown in Address O00.5, it means there is AC110V output from Point 9(AC110V) of JP1 socket on RIO board (KEB-C7) and Point 10(AC0V) for the relay of oil pump.

While the Pump Button is pressed, the display of Address O00.5 should be changed from □→■.

If the Relay of oil pump is not function properly, please check the wire from JP1.9 and JP1.10 v to Relay or replace RIO Board.

5 Controller Setting and Reference data

KEB EDM Controller is a PC_BASE controller. There are some internal parameters need to be preset.

5.1 Display System Parameter

Operation of display System Parameter Screen：

（1）Press【ESC】Key under Main screen and enter to system screen.

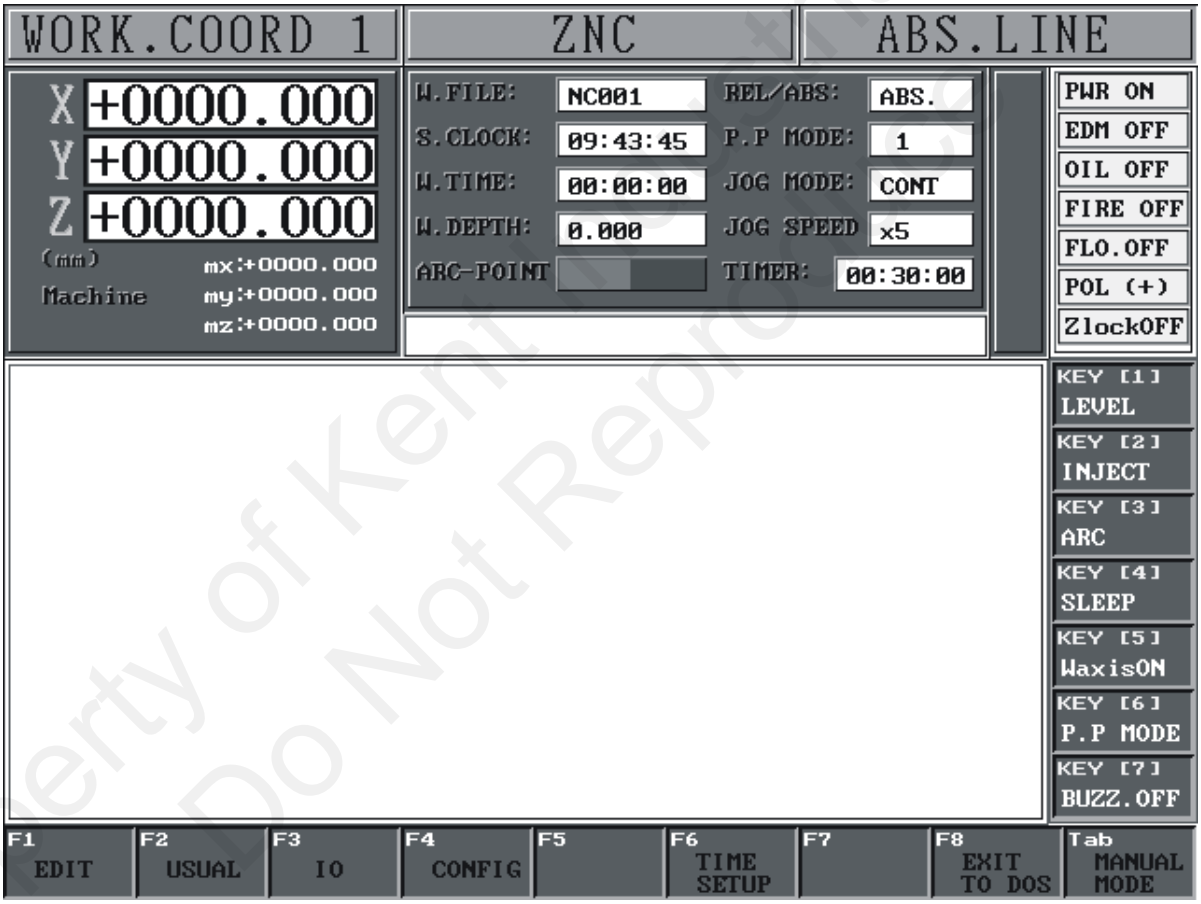

Fig 5.1 System Screen

（2）Press【F4 Parameter】and enter I/O Screen.

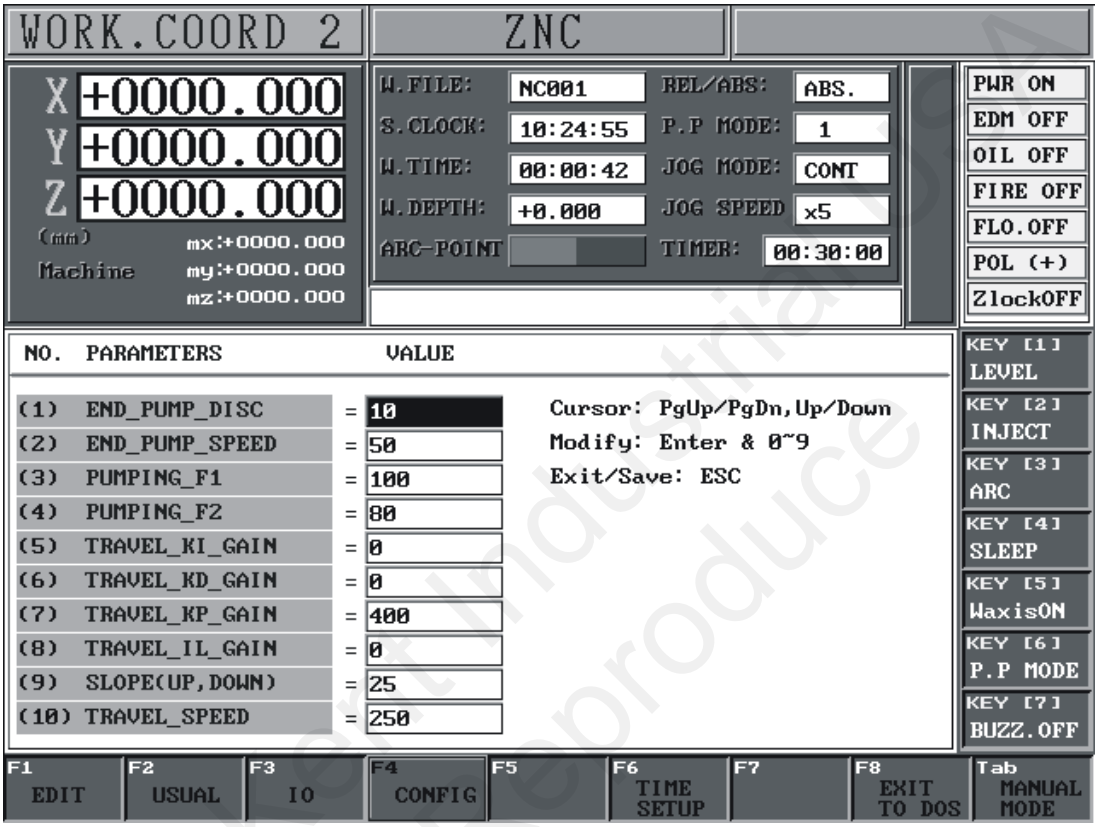

Fig 5.2 System parameter Screen

5.2 Description of System Parameter

ID	Name of Parameter	Default	Description
1	END_PUMP_DISC	40	End distance of Electrode retract to previous position (Unit: pulse)
2	END_PUMP_SPEED	5	End Speed percentage of Linear PUMPING
3	PUMPING_F1	100	Electrode Retract Speed(2nd Step) (Unit: pulse/5ms)
4	PUMPING_F2	80	Electrode Retract Speed(3rd Step) (Unit: pulse/5ms)
5	TRAVEL_KI_GAIN	0	KI Gain of Z axis LM628 while Traveling
6	TRAVEL_KD_GAIN	0	Differential Gain G of Feed Rate
7	TRAVEL_KP_GAIN	400	KP Gain of Z axis LM628 while Traveling
8	TRAVEL_IL_GAIN	0	Reserved
9	SLOPE(UP，DOWN)	25	Slope of Z axis when Increase/ Decrease Speed
10	TRAVEL_SPEED	250	Travel Speed of G00
11	HOME_SPEED	300	Speed of Homing.
12	EDGE_SPEED	20	Feed Rate of EDGE
13	LAG_PROTECT_REF	200	Max. LAG Value. Alarm is ON when LAG is greater than this value.
14	OPTICAL_SCALE	5	DRO Scale Value
15	MAXIMAL_CURRENT	60	Max. Spark Current
16	RESERVED4	0	Reserved
17	RESERVED3	0	
18	RESERVED2	0	Reserved
19	RESERVED1	0	Reserved
20	RESERVED0	0	Reserved

! Note

＊The parameters listed above are default value from manufacture.
Change any parameter might effect the performance.
If the parameters are changed by accident, please check the Parameter Setting Table.

5.3 Servo Adjustment

Servo Driver is the driver of Servo Motor. If the driver is not tune well, the KEB Spark performance will be loose.

Method of Adjustment：

（1）Use square wave generator to create a square wave. The voltage and frequency is shown as bellow:

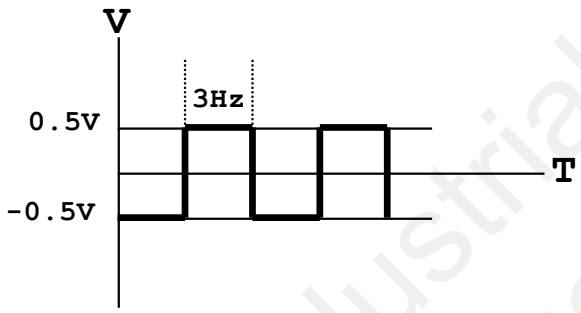

（2）Add Vim Leg to square wave.

（3）Use oscilloscope: Use CH1 to detect Vin and GND，CH2 to detect TG and GND。

（4）Adjustment steps are shown as bellow. Use CH2 and having the Wave shown as bellow:

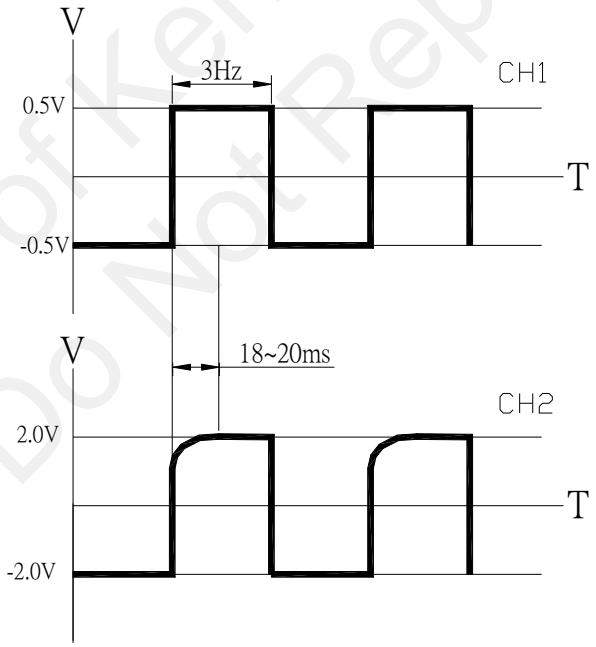

①Adjust GT GAIN and have Wave Height equal to 2.0V

②Adjust DC GAIN Knob and have Wave Slope equal to 18~20ms.

③Adjust LAG value between 30~40.

6 KEB Series EDM Trouble Shooting

During the process of maintenance, please refer to the schematic of KEB CNC EDM machine in the maintenance manual. With the schematic in previous chapters can help the technician for trouble shooting.

6.1 System unit functions Description

KEB series Power Controller can be classified base on its function:

① Spark Operation:

② Spark Auto operation:

③ Spark Signal Generate/ Control:

④ Spark Servo Action Control:

⑤ Power generator:

Table of the function：

System Name	ID	Function
Spark Operation	KEB-E10 KEB-E9 KEB-E5/KEB-E6 KEB-E11 KEB-C3 KEB-C7	Main Key Board Function Key ON/OFF Key Main power switch I/O Card RIO Interface Board
Spark Auto operation	KEB-C1 KEB-C3 KEB-C7	IPC I/O & Motion RIO Interface Board （1） Spark Output Control （2） Polarity Switch （3） Main Power/Pump Power Control （4） Fire Alarm Circuit Loop
Spark Signal Generate/ Control	KEB-C2 KEB-G1 KEB-G2 KEB-F1 KEB-F2,F3	GAP&PULSE Board Spark HV Output Board Spark LV Output Board HV Current Limit Frame LV Current Limit Frame

Spark Servo Action Control	KEB-C3	Motion card
Power Supply Parts	KEB-D1 KEB-D2 KEB-D3 KEB-J1 KEB-J2	（1）Provide HV/LV AC 3phase Power. （2）Provide Power of Pump （（1）Provide AC 110V Power of Servo Controller （2）Provide AC 110V Power of Servo Motor （1）Provide AC 110V Power of Controller （2）Provide AC 110V Power of HV/LV Board （3）Provide AC 110V Power of Fan （4）Provide AC 12V Power of quartz Light （1）Provide DC +12V, +5V for RIO Interface Board. （2）Provide AC 110V Power of RIO Interface Board Provide DC +12V, +5V for HV/LV Board DC+5V、DC+12V

6.2 Trouble Shooting and Maintenance Flow Chart

Please refer to operation manual, confirm the function of each key/ Signal LCD for trouble shooting. Please check the following item while the machine has problem:

（1）Status of problem:

① When machine has problem, the function key LED Light on panel will be On or Off and the error message will show on screen.

② The status of machine motion.

③ Position of working head／Status of workpiece／Status of Oil Tank

（2）Is operation process correct?

（3）Please check each abnormal unit and restart the power.

⚡ Danger

1. Be aware of electrical shot while the machine is ON during trouble shooting. Please turn off power while replace components and unplug connector.
2. Before restart the power, please make sure each connect point is connected properly.

! Note

If the customer need the service from manufacturer, Please provides the following information and fax it to JSEDM. Our engineer will reply to you ASAP.

（1）Information on Machine Head：

Serial Number：

Date：

Model：

（2）Please use the name of component and parts described in the operation manual and fax it to us:

① Describe the status of problems

② LED Light ON/OFF of each function key and the Error Message on Screen.

③ Position of working head and status of oil tank.

④ Damaged component:

a. Name

b. Parts and location

c. Status of damage, such as burn out, broken and not function.

⑤ Times of problems happen.

6.2.1 Maintenance Flow Chart: Abnormal Machine Boot up

Case 1: when main power is ON, press 【ON】 **and can not turn on controller**

※Refer to Schematic：KEB-C1.DSN、KEB-H1.DSN、KEB-E.DSN。

Reference Schematic

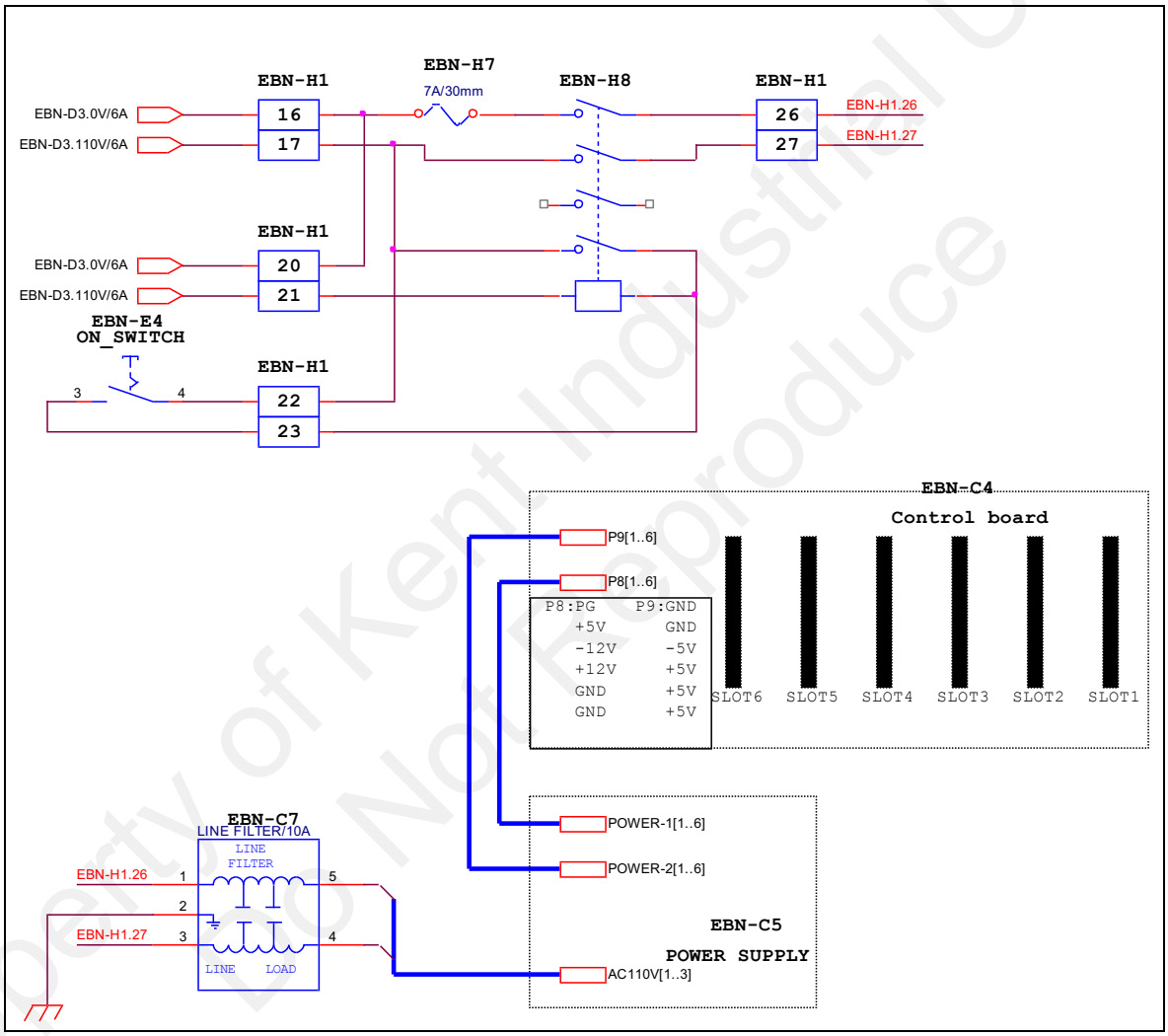

Trouble Shooting flow Chart

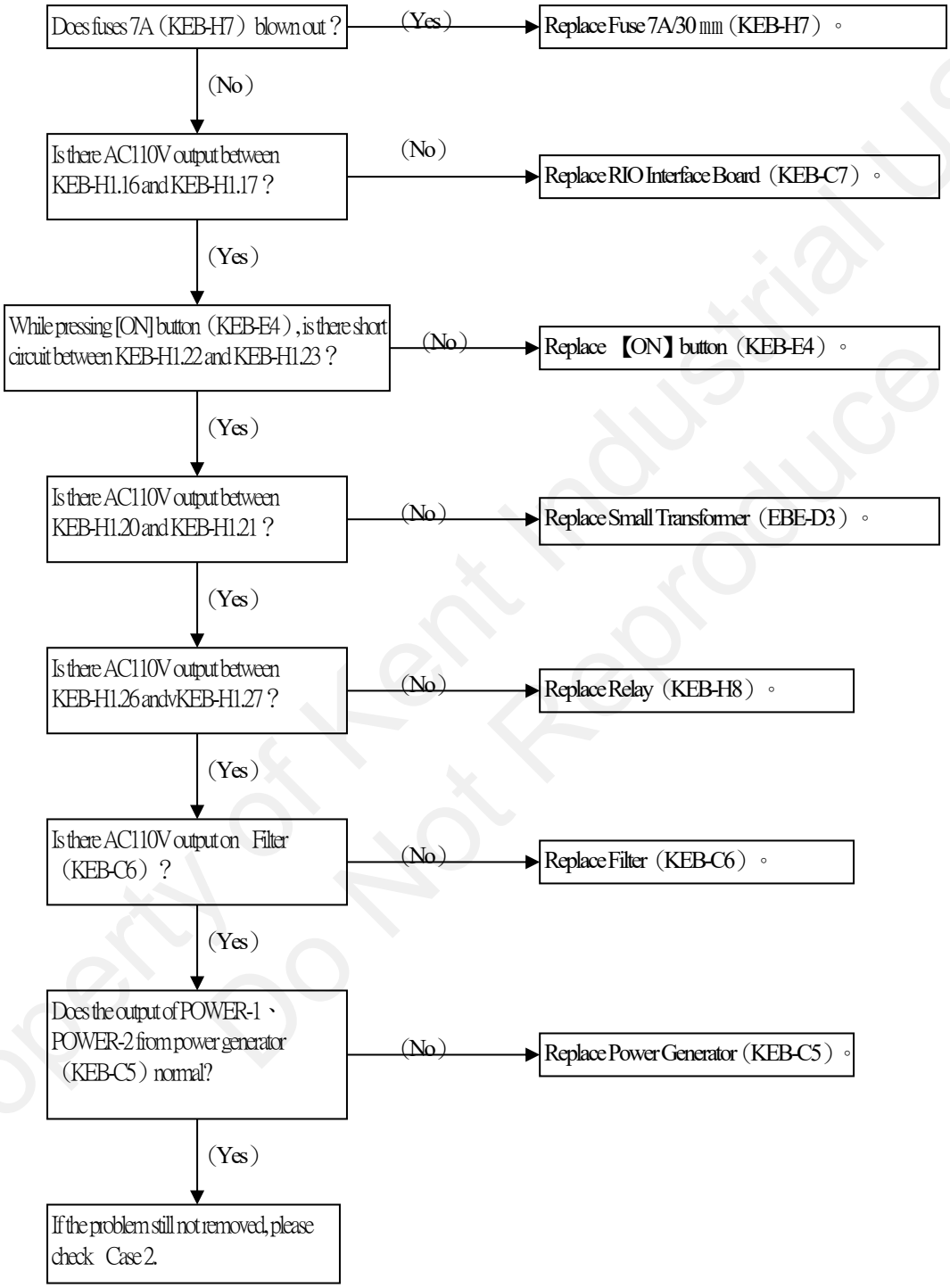

Case 2：Can not execute KEB program. Enter system screen.

Trouble shooting Flow Chart

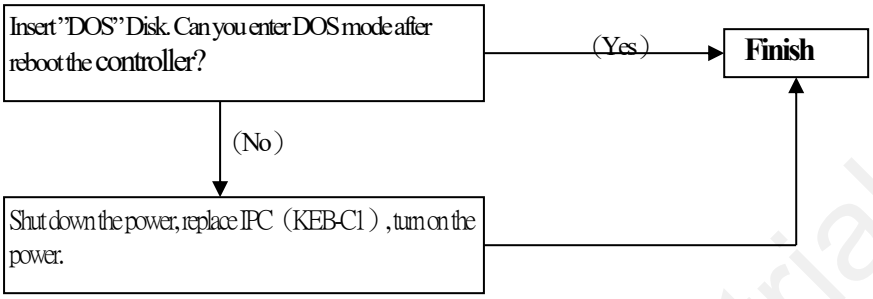

6.2.2 Z axes movement by themselves after machine turn on

※Reference Schematics：KEB-B.DSN、KEB-C1.DSN、KEB-C2.DSN、KEB-C3.DSN。

Reference Schematics

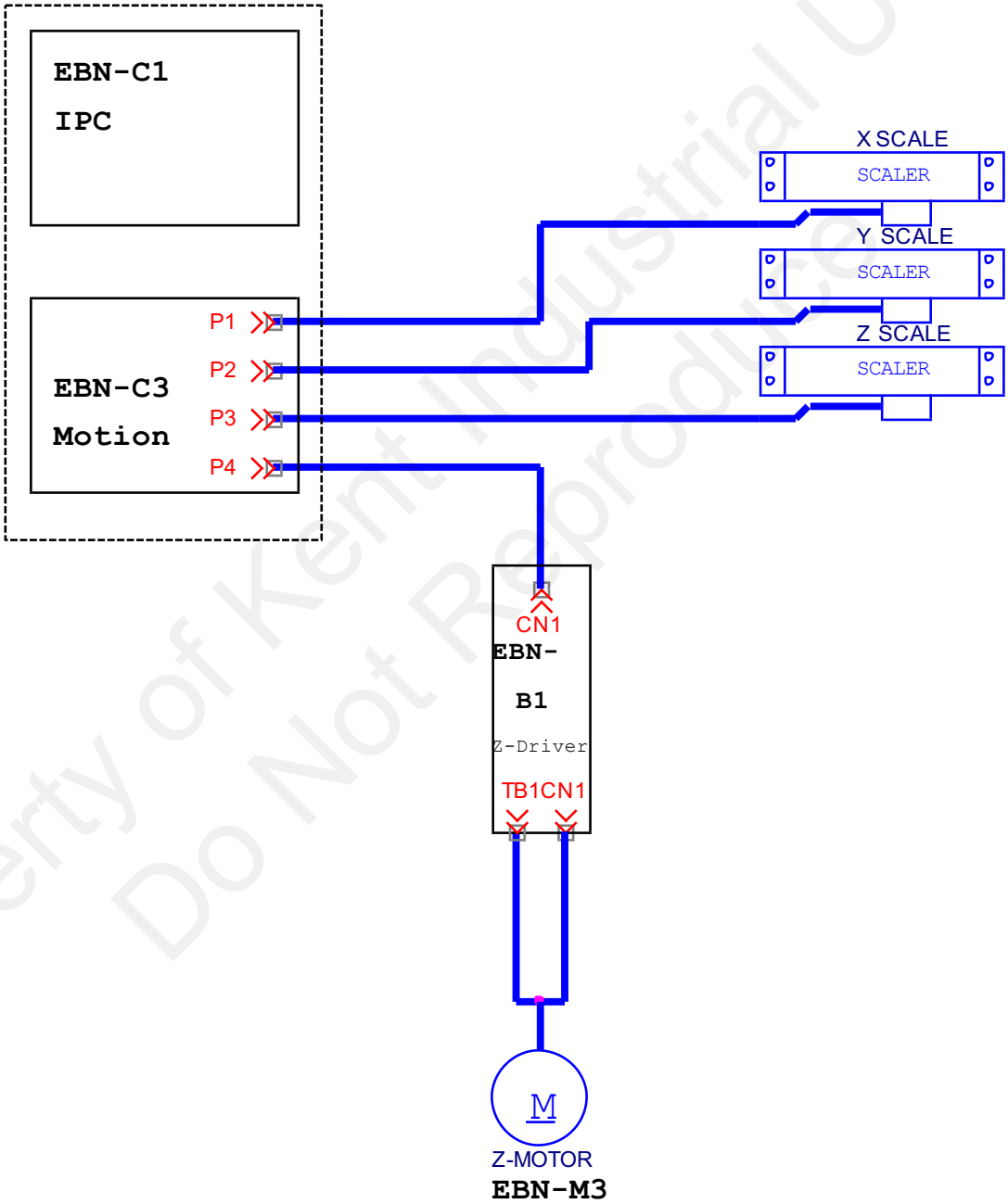

Trouble Shooting flow chart

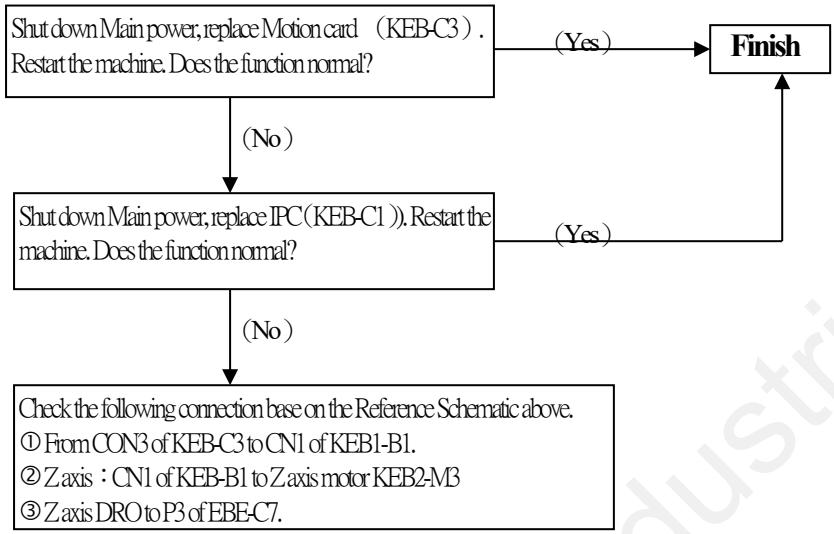

6.2.3 Z axis can not move

There are 4 possibilities：

（1）【Z+】、【Z-】press key on remote control box damaged.
（2）Motion card（KEB-C3）damaged.
（3）Z axis DRIVER damaged.
（4）Z axis motor damaged.

※Reference Schematic：Refer to the schematic in Chapter 6.2.2

Trouble Shooting Flow Chart

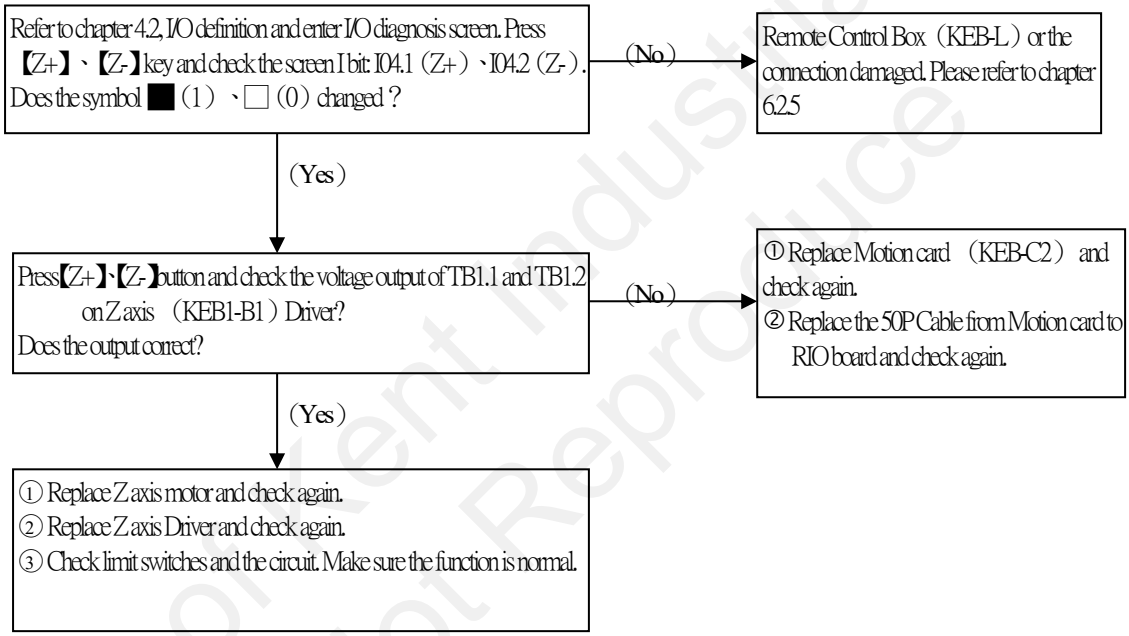

6.2.4 W axis function is abnormal.

※Reference Schematics：KEB-C7.DSN、KEB-small electrical box. DSN、KEB-Machine Base wiring. DSN。

Reference Schematics

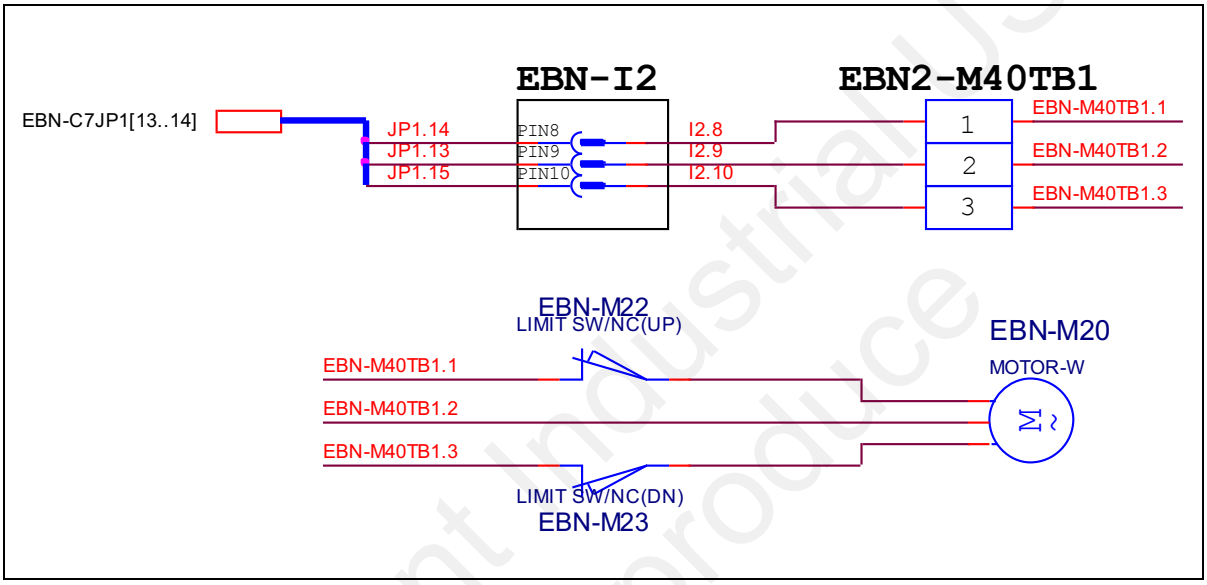

Trouble Shooting Flow Chart

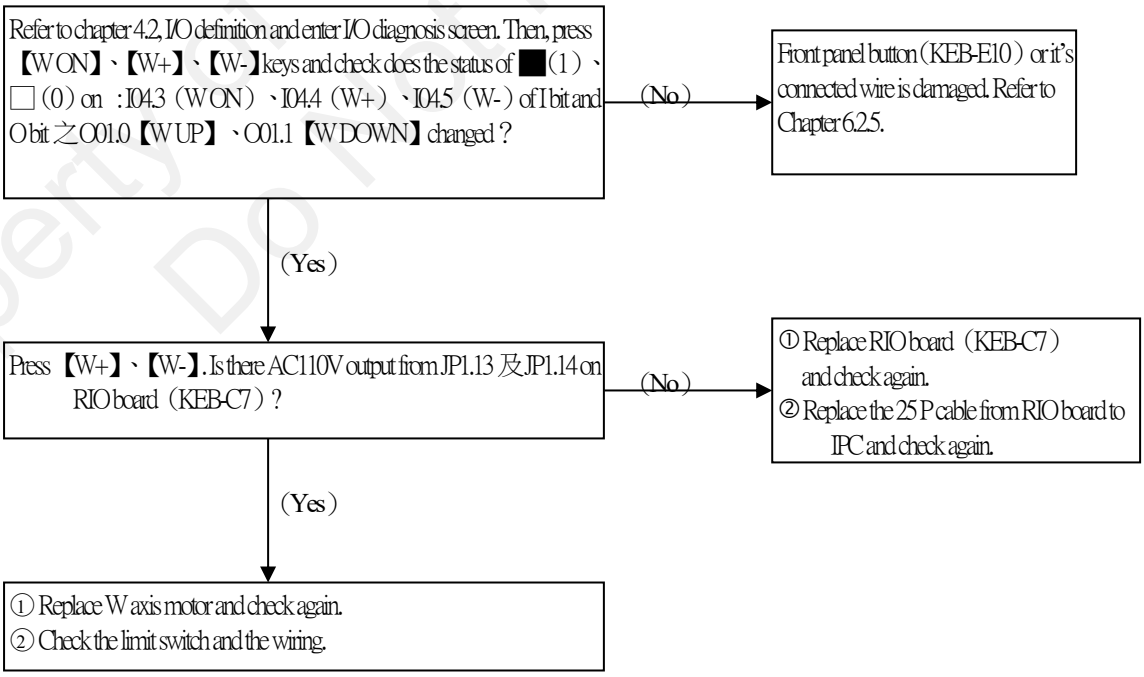

6.2.5 Front Panel and Remote control box malfunction

FAQ of Front Panel：

（1）Press Key on Panel is not valid.

（2）LED is not ON

FAQ of Remote Control Box：

（1）Press Key on Remote Control Box is not valid.

（2）LED is not ON

※Reference Schematics：KEB-E.DSN、KEB-C1.DSN、KEB-C2.DSN。

Reference Schematics

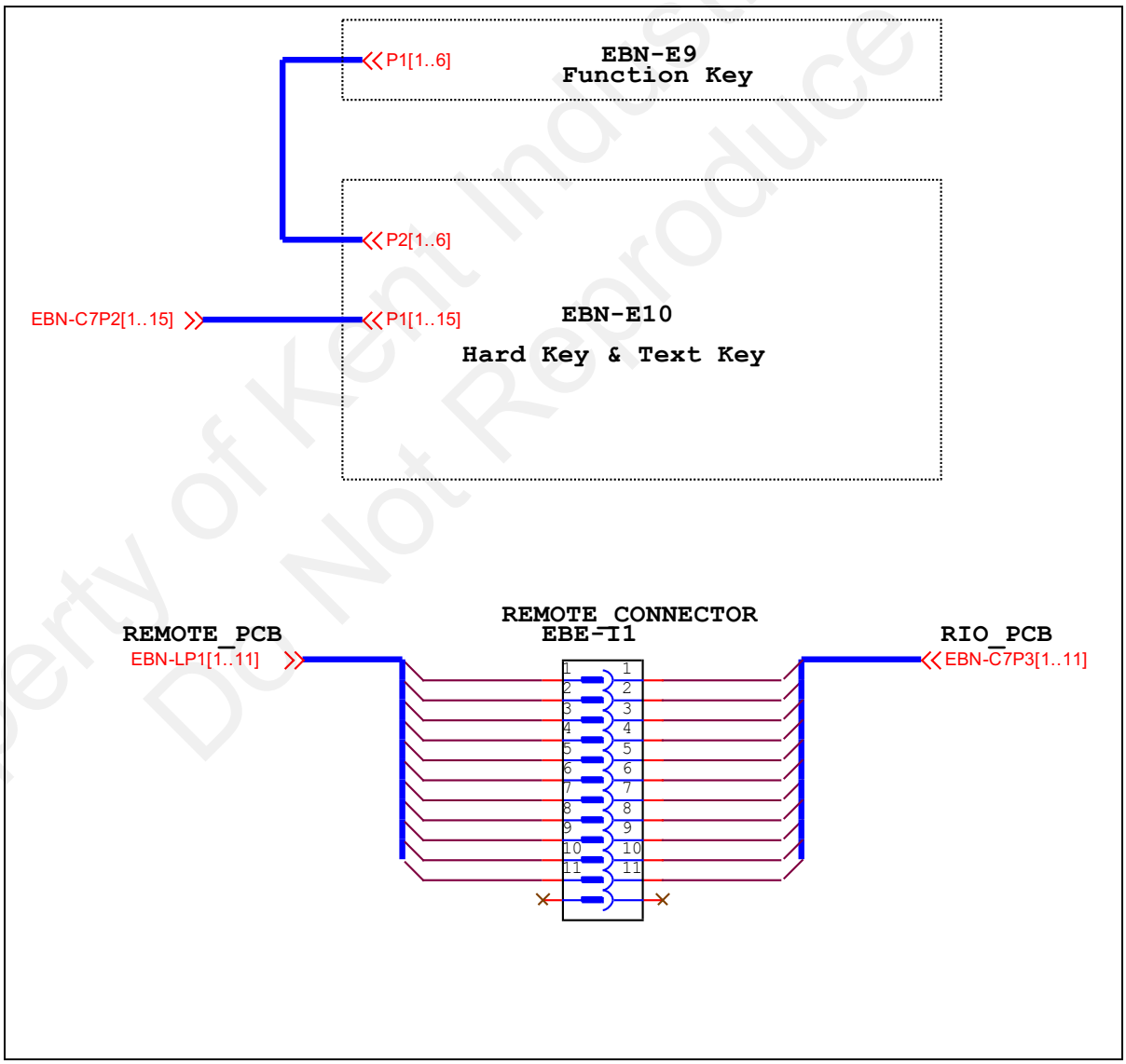

Trouble shooting Flow Chart

For Front Panel：

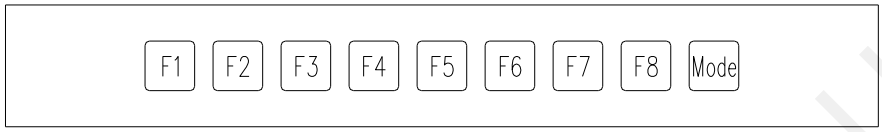

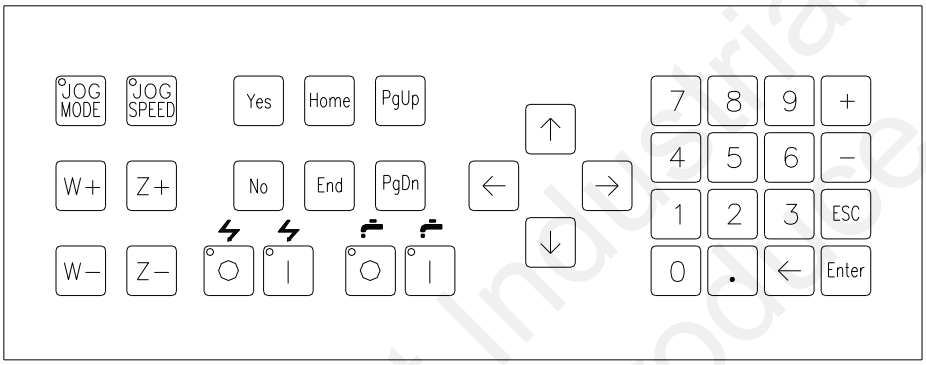

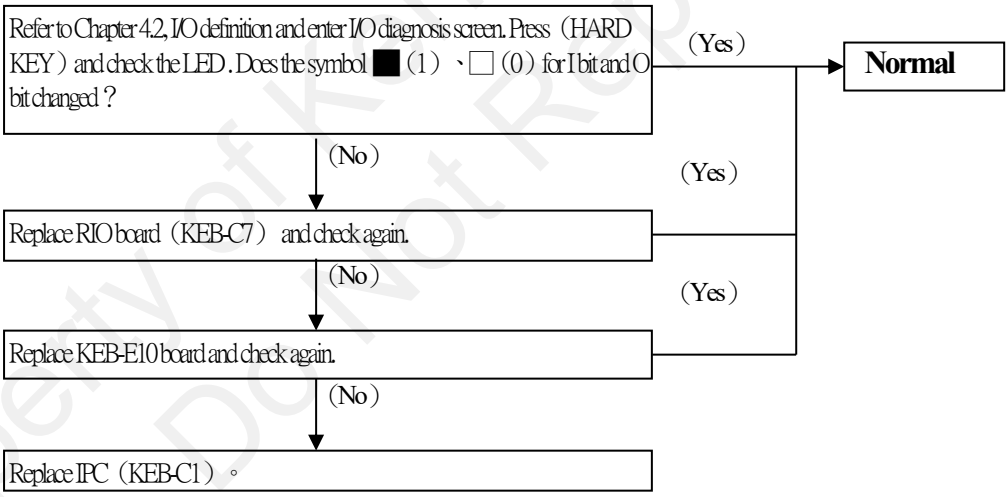

Trouble Shooting Flow Chart for Remote Control Box：

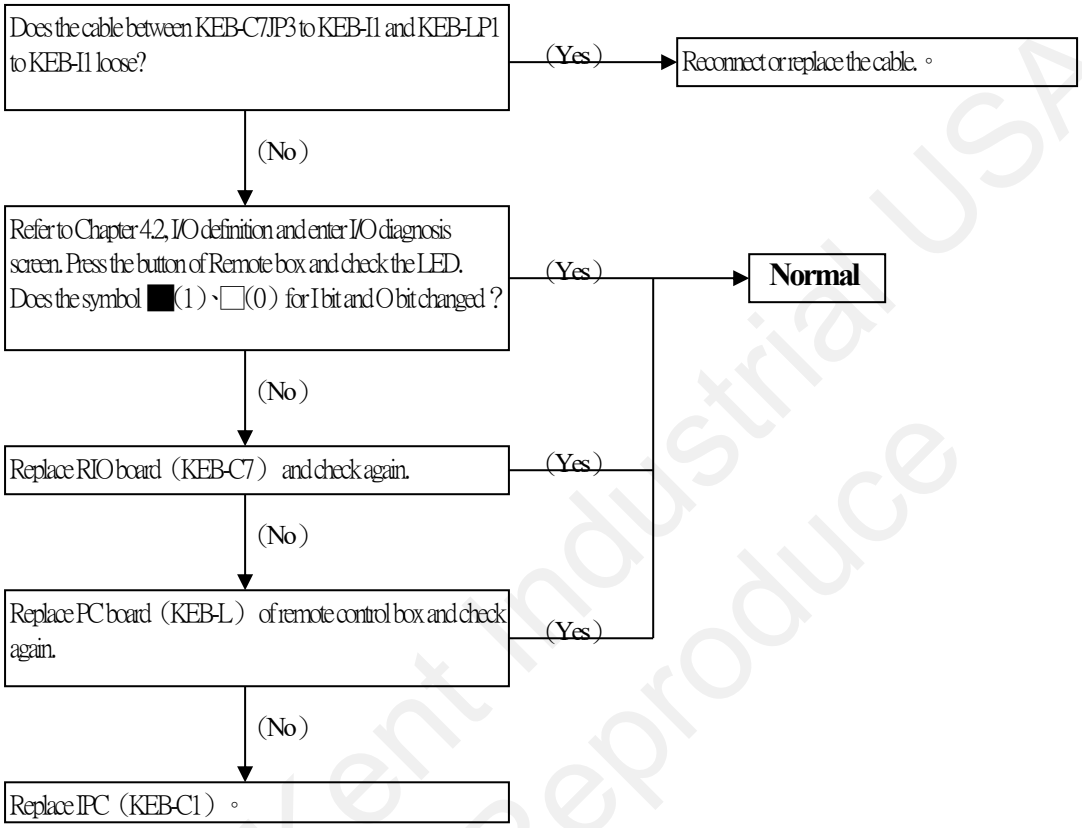

6.2.6 Pump can not turn on

※Reference Schematics：KEB-H1.DSN、KEB-C2.DSN、KEB-I.DSN。

Reference Schematics

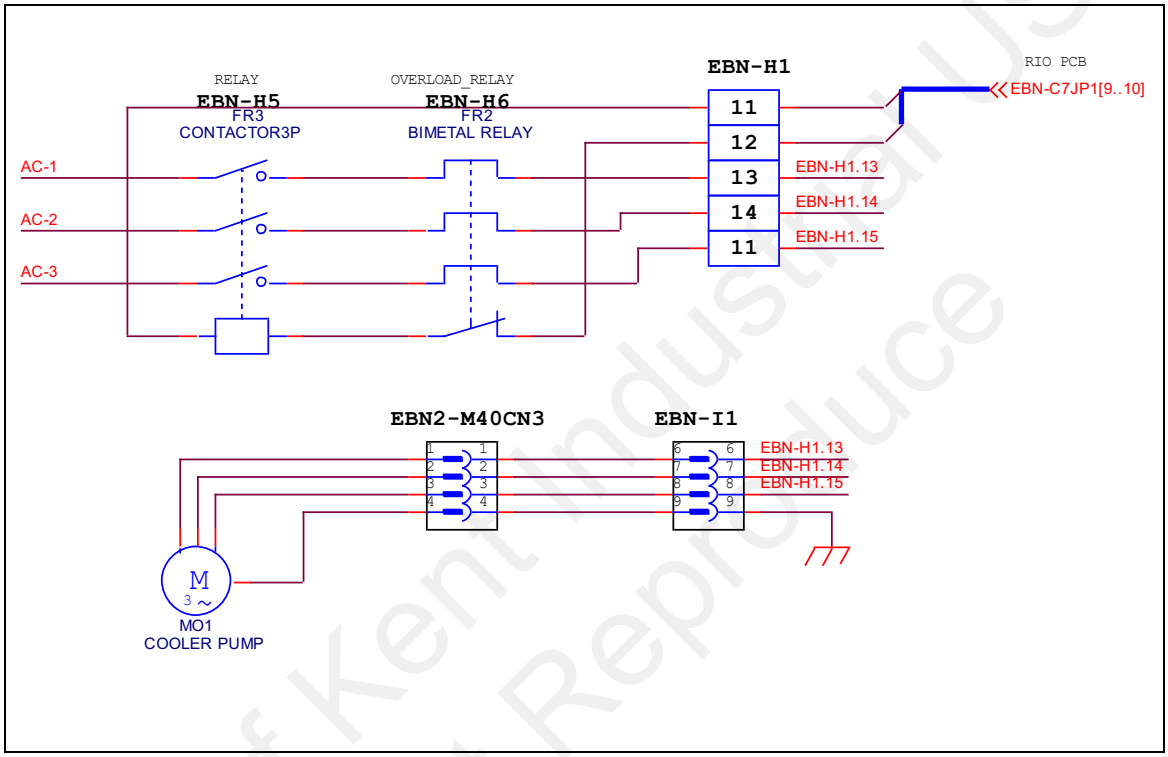

Trouble Shooting Flow Chart

Does the voltage input and phase correct? If not, check the big transformer（KEB-D1） and main power input.

(No) → The press button on panel and remote control box or the connected cable is damaged. Refer to chapter 6.2.5 for detail.

(Yes) ↓

Press Pump button and check the I/O diagnosis of I bit05.4, O bit00.5、O bit03.5 Does the symbol ■(1)、□(0) for I bit and O bit changed？

(No) → ① Replace RIO board（KEB-C7）and check again.
② Replace IPC（KEB-C1） and check again.

(Yes) ↓

Is there AC110 output between KEB-H1.11 and KEB-H1.12？

(No) → ① Replace or Reset Thermal Relay（KEB-H5）and check again.
② Replace Relay（KEB-H6） and check again.

(Yes) ↓

Does the replay ON？

(Yes) ↓

Check the cable refers to the schematic.

✎ Hint

1. Check the turning direction of pump is correct. If not, switch the power inlet AC-1 and AC-2.
2. When the pump is dry run：
   ① Check the pump is full of oil.
   ② If the pump can not fill the oil, check the pump is leaking or the valve is damaged.

6.2.7 Spark System malfunction

Spark power structure of KEB is shown as bellow:
There are 3 group of DC power in JSEDM system:

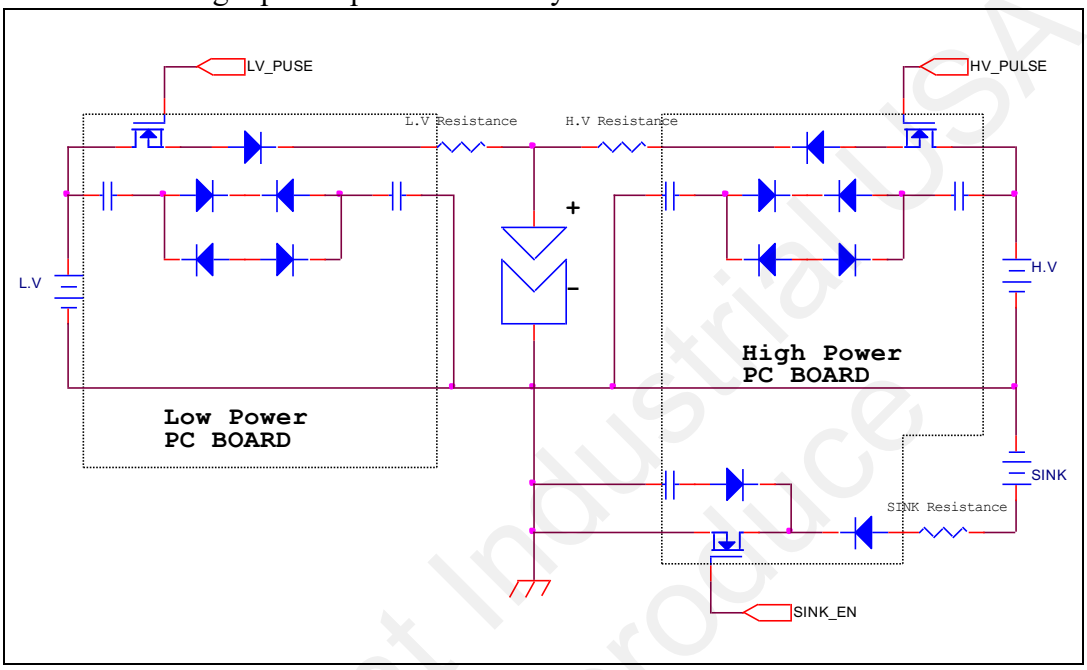

Group 1: Provides the energy for Arc Spark and High Voltage spark. Called H.V.
Group 2: Provides the Spark energy. Called L.V.
Group 3: Protection Power for L.V and H.V. Called SINK。
Control Spark System is consist of 3 Circuit Boards：

1. PULSE card（KEB-C3）
   Detect and Control the Spark Status.
2. HV Board（KEB-G1）
   HV Board guides the Spark Gap and HV Spark Control.
   With SINK circuit, machine can protect the MOSFET on HV and LV Board.
3. LV Board（KEB-G2）.【60A: 1 set，120A: 2 set，180A: 3 set】
   LV board can select level of High Frequency and High Current. It can select the energy while EDMing.

In spite of MOSET of LV board in Main Spark Circuit, there are series connected with limit current resistance. Therefore, MOSFET won't burn out if the Peak Current is too high.

Description of each AC current and circuit:
H.V: Provides the energy for HV Board while guiding the spark gap and HV spark.

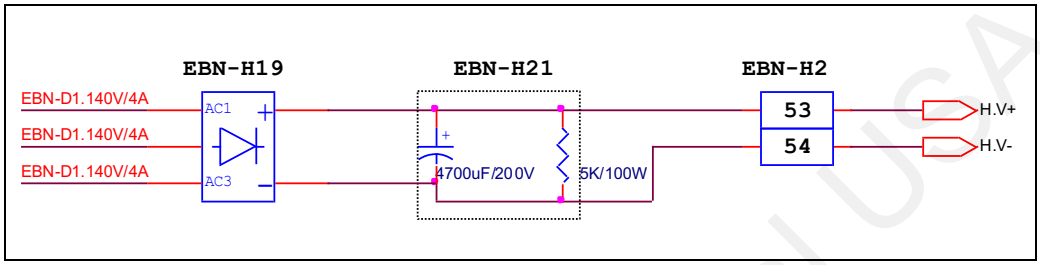

L.V: Provides the energy for LV Board while Sparking. The circuit is shown as bellow:

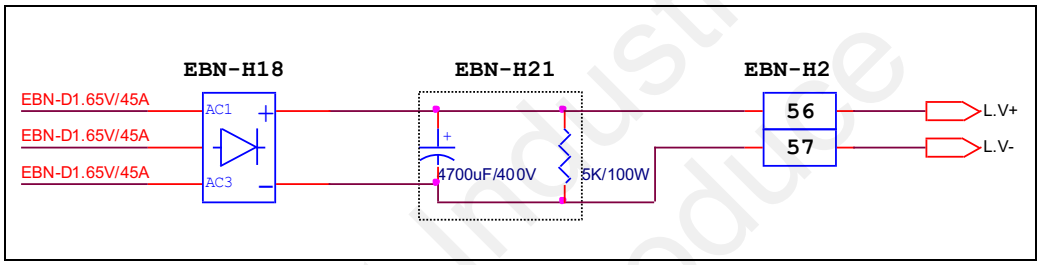

SINK：Provides the protection power for HV and LV board.

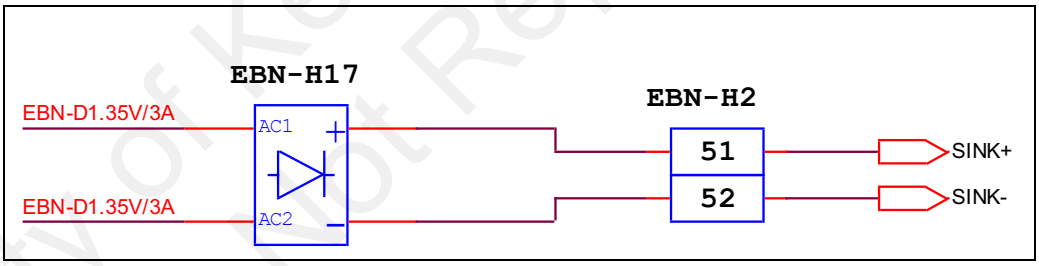

FAQ of Spark:
① Can not enter spark procedure.
② After press Spark button, Z axis moving up and down but with no spark.
③ LV current too low.
④ HV current too low.
⑤ No voltage for LV.
⑥ No voltage for HV.
⑦ Arcing.

Can not enter Spark procedure:

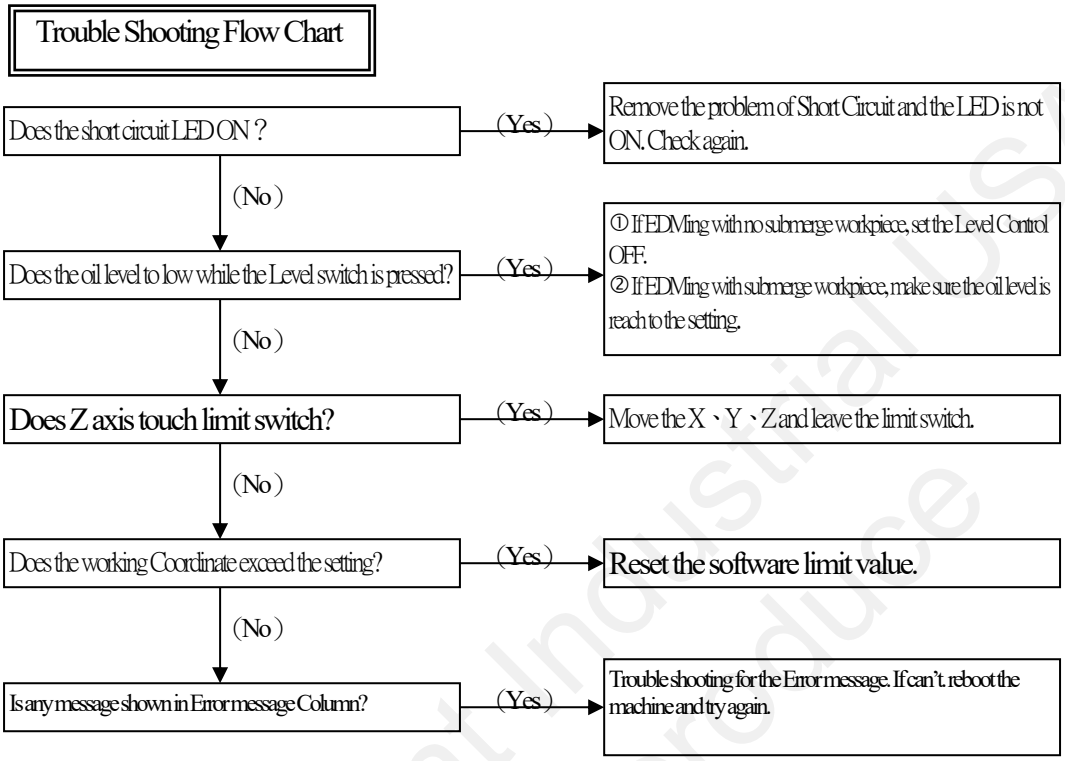

Press Spark button, Z axis moving up and down but with no spark:

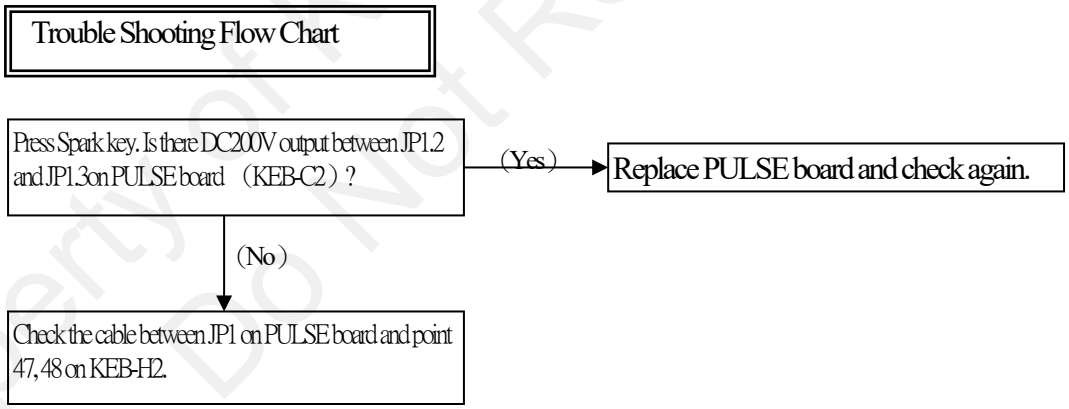

LV Current too low

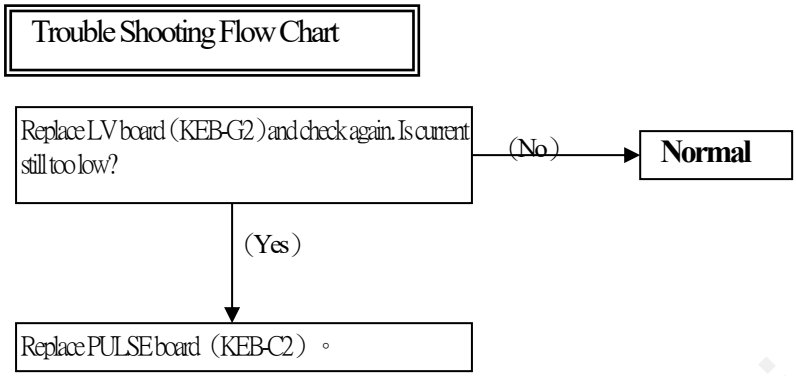

HV current too low

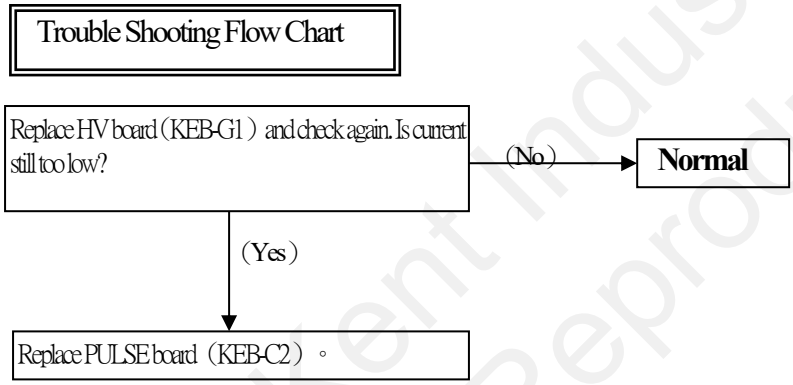

No Voltage in LV

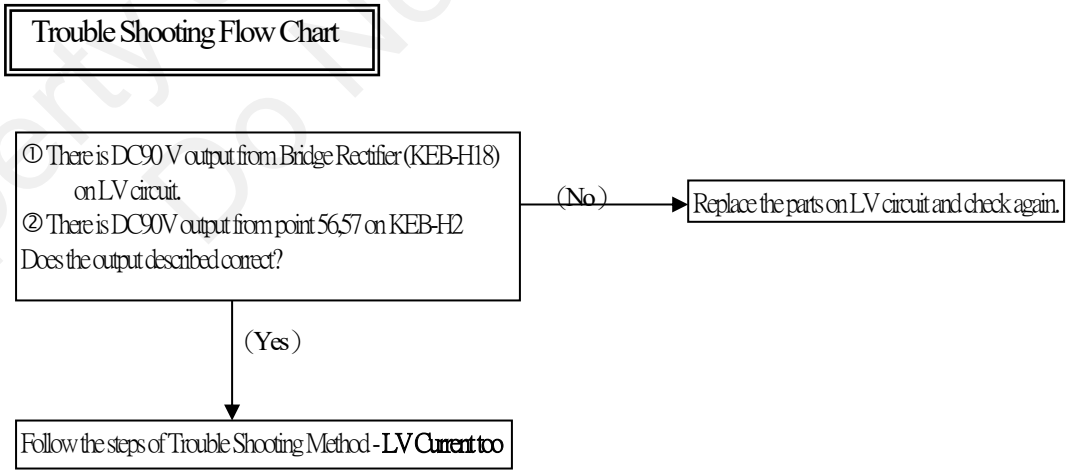

No voltage in HV

Trouble Shooting Flow Chart

① There is DC200 V output from Bridge Rectifier (KEB-H19) on HV circuit.
② There is DC200V output from point 53,54 on KEB-H2
Does the output described correct?

(No) → Replace the parts on HV circuit and check again.

(Yes) ↓

Follow the steps of Trouble Shooting Method - **HV Current too**

Arcing

Trouble Shooting Flow Chart

Unplug the connector on P1 and JP1 of LV board (KEB-G2). Is it Arcing if only EDMing with High Voltage only?

(No) → Replace LV board

(Yes) ↓

Unplug the connector on P1 and JP1 of HV board (KEB-G1). Is it Arcing if only EDMing with Low Voltage only?

(No) → Replace HV board

(Yes) ↓

Replace PULSE board (EBE-C3)。

6.2.8 Polarity reverse switch malfunction

※Reference Schematics：KEB-H2.DSN、KEB-C1.DSN。

Reference Schematics

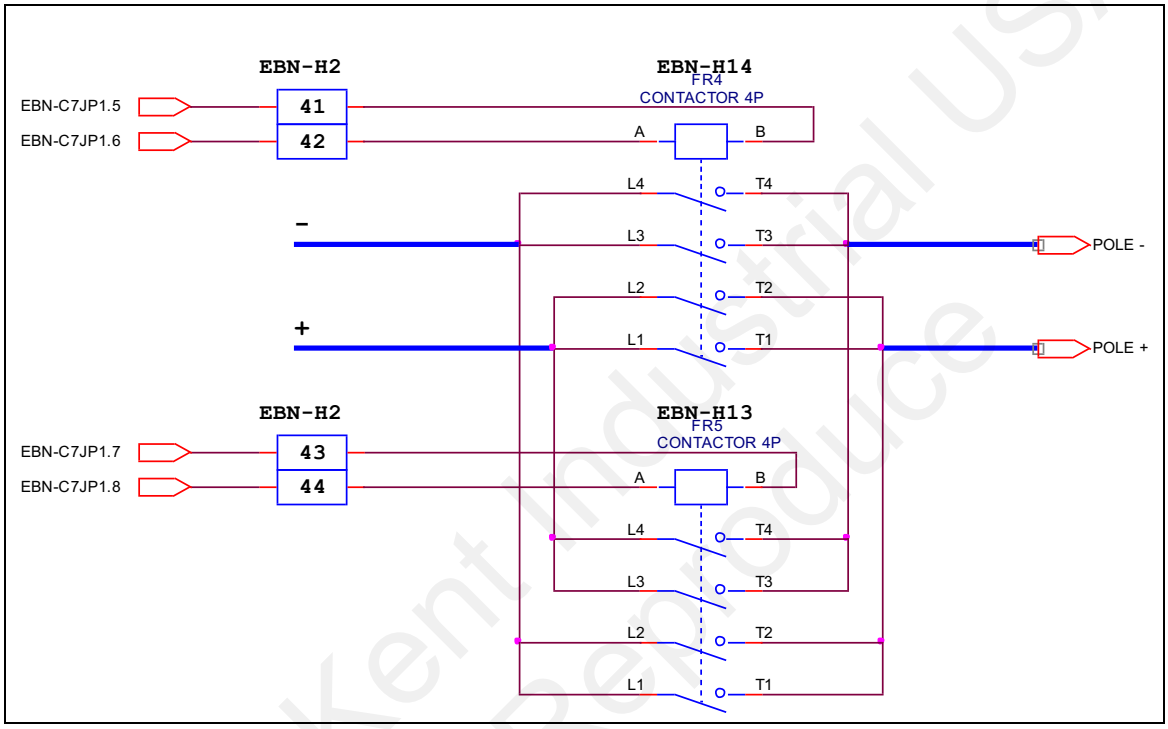

Trouble Shooting Flow Chart

Polarity Selection described as follow:
① Relay（KEB-H14） is click when the Spark button is pressed.
② When the polarity is reversed as jump to the next step, the other relay （KEB-H13）is click and EBE-H14 is released.
Does the relay（KEB-H13）acts as described above when the polarity is reversed?

(Yes) → If the relay is click but can not spark normally, it means the relay is bad connection. Replace the replay.

(No)

Is there AC110 output from point 43 and 44 on terminal（KEB-H2）?

(Yes) → If the relay is not click, it means the coil is bad. Replace the relay.

(No)

Replace RIO board（KEB-C7）?

6.2.9 Z axes won't stop while electrode touches workpiece

※Reference Schematics：KEB-H2.DSN、KEB-C1.DSN。

Reference Schematics

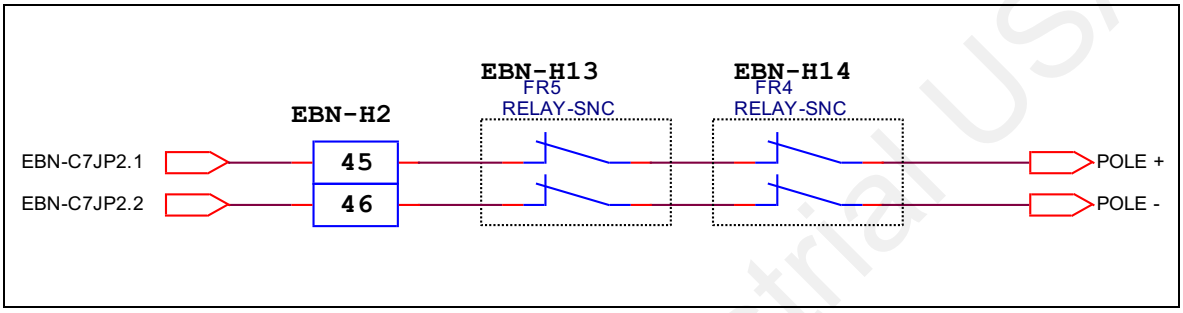

Trouble Shooting Flow Chart

When the workpiece touch electrode:
① Buzzer is ON (unless Buzzer function is OFF)
② Short Circuit LED is ON.
③ Z axis is frozen.

Check 1:
Buzzer is not ON and the Short Circuit LED is not ON as workpiece touch electrode.
Check the wire and connect point base on Reference Schematic.

Check 2:
Replace Motion card if Z still can move while workpiece touch electrode.

Replace RIO board（KEB-C7）and check again.

Replace IPC（KEB-C1） and check again.

6.2.10 Synchronize flush malfunction

Synchronize flush is ON when the following buttons is pressed.

（1）In Spark status, press key

（2）Press the function key【KEY 2】 hronize flush ON.

※Reference Schematics：KEB-C1.DSN、KEB-I.DSN、KEB-Electrical Box.DSN

Reference Schematics

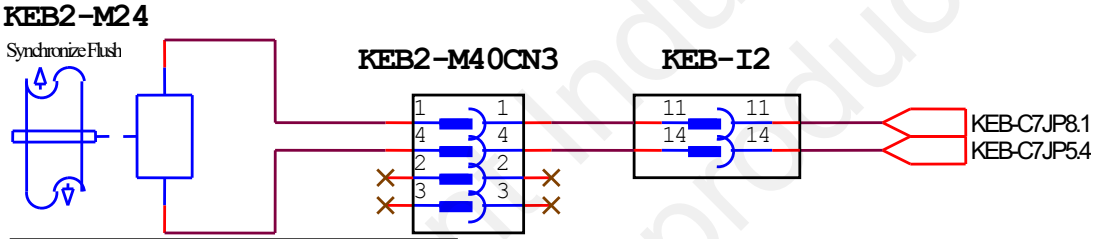

Trouble Shooting Flow Chart

Press synchronize flush button and check the I/O diagnosis. Does the symbol ■（1）、□（0）of I bit02.2 changed?

（No）→ The button on front panel or the connection is damaged. Refer to chapter 6.2.5 for detail。

（Yes）↓

Is there DC24V output from KEB-C7JP8.1 and EBE-C7JP5.4？

（No）→ ① Replace RIO board（KEB-C7）and check again.
② Replace IPC（KEB-C1）and check again.

（Yes）↓

Make sure the connected cable is not loose.

↓

Replace the relay of synchronize flush（KEB2-M24）.

6.2.11 Oil Level Switch Malfunction

Level Control is ON when the following buttons is pressed.

（1）Press function key【KEY 1】, turn on Oil Level Function

（2）（2）Press  key under Spark status.

※Reference Schematics：KEB-C1.DSN、KEB-I2.DSN、KEB-small electrical box.DSN。

Reference Schematics

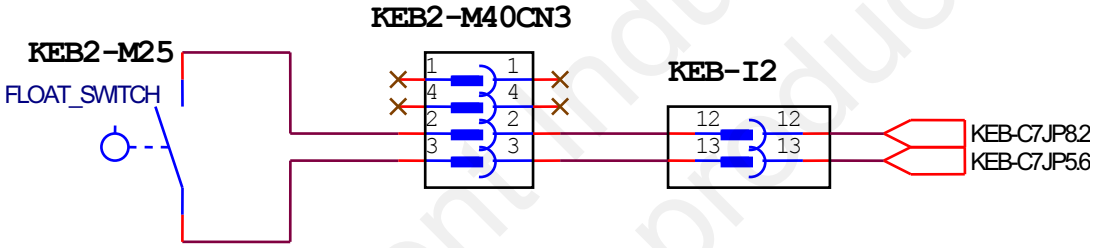

Trouble Shooting Flow Chart

Press Level Control button and check the I/O diagnosis. Does the symbol ■（1）、□（0）of I bit02.1 changed?

（No）→ The button on front panel or the connection is damaged. Refer to chapter 6.2.5 for detail.

（Yes）↓

Is there DC24V output from KEB-C7J8.1 and KEB-C7JP5.6？

（No）→ ① Replace RIO board（KEB-C7）and check t again.
② Replace IPC（KEB-C1）and check again.

（Yes）↓

Make sure the connected cable is not loose.

↓

Replace level switch（KEB2-M25）。

6.2.12 Work light is not ON

※Reference Schematics：KEB-C2.DSN、KEB-I.DSN、KEB-H1.DSN、KEB-D.DSN。

Reference Schematics

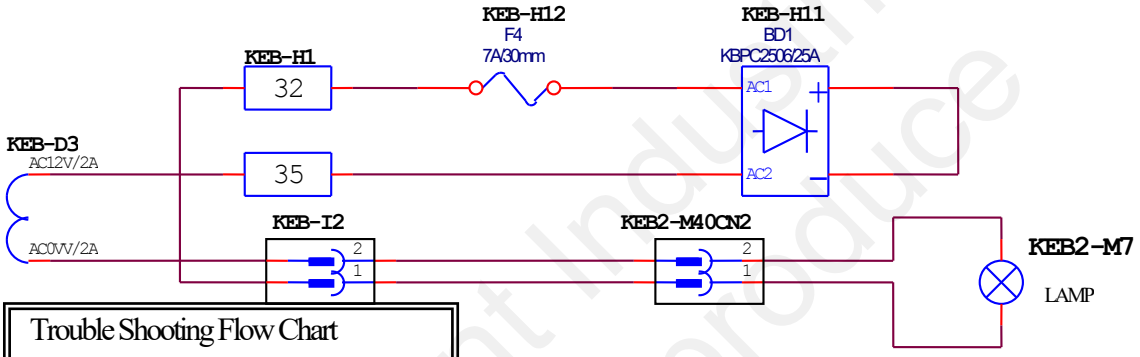

Trouble Shooting Flow Chart

Does the fuse KEB-H12（F4/7A）ok?
- (No) → Replace fuse（KEB-H12）。
- (Yes) ↓

Is there AC12V output from small transformer KEB-D3?
- (No) → Replace small transformer（KEB-D3）。
- (Yes) ↓

Is there AC12V output from KEB2-M40CN2 for quartz light?
- (No) → Check the circuit loop is in good connection.
- (Yes) ↓

Is quartz light KEB-M7 blown out?
- (Yes) ↓

Replace quartz light（KEB-M7）

6.2.13 Buzzer is not ON

Even the buzzer LED is OFF, buzzer still ON while:

（1）Fire Alarm is ON

※Reference Schematics：EBE-C7.DSN、EBE1-E.DSN。

Reference Schematics

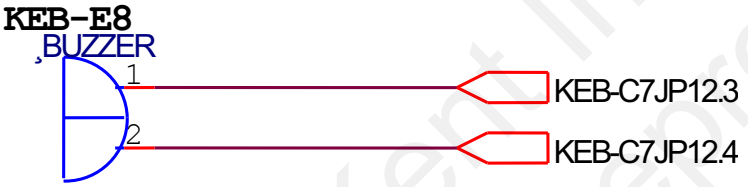

Trouble Shooting Flow Chart

Is there DC24V output from Buzzer（KEB-E8）when buzzer is ON?

（Yes）→ If there is DC24V but the buzzer is not ON, It means the buzzer is damaged. Replace a new buzzer.

（No）↓ Replace the PC board as following order:
①RIO board（KEB-C2）。
②IPC（KEB-C1）。

6.2.14 Fire Alarm is not function

Cover the photo sensor by hand for couple seconds. Turn the photo sensor toward light source and uncover it. The following fire alarm action should appear:

（1）Fire Alarm LED is ON
（2）Spark Power off
（3）Buzzer is ON with a short interval break.

Turn on （KEB2-M7） and REST fire alarm signal. The machine will back to normal.

※Reference Schematic：KEB-C1.DSN、KEB-small electrical box.DSN。

Trouble Shooting Flow Chart

Replace the PC board as following order. Restart the machine and check again.
① RIO board（KEB-C7）。
② IPC（KEB-C1）。

↓

Replace Photo Sensor if the machine still not working normally after replacing the PC board.