KENT USA®
Since 1979

Flush Type Wire EDM
Operation Manual

Property of Kent USA
Do Not Reproduce

www.kentusa.com | 1.800.KENT.USA

CONTENT

I. Introduction

II. General

Property of Kent USA
Do Not Reproduce

III. Operation panel

IV. Basic operations

Property of Kent USA
Do Not Reproduce

Property of Kent USA
Do Not Reproduce

V. Application operations

Property of Kent USA
Do Not Reproduce

Property of Kent USA
Do Not Reproduce

VI. Appendix

Property of Kent USA
Do Not Reproduce

I. Introduction

Property of Kent USA
Do Not Reproduce

Introduction

1.Model

This operation manual is suitable for the following models:

Model/MFG	Model	Wire EDM		Control Unit	Spark Unit
KENT USA ROBOSTAR Wi-200	Wi-200	Submerge Type	WJS2 (Machine base) WJS3 (Water Tank)	WJS1-B box	WJS1-C box
KENT USA ROBOSTAR Wi-30E	Wi-30E	Flush Type			
KENT USA ROBOSTAR Wi-50E	Wi-50E	Flush Type			
	Wi-50ES	Submerge Type			
KENT USA ROBOSTA R Wi-430	Wi-430	Flush Type			
	Wi-430S	Submerge Type			
KENT USA ROBOSTA R Wi-640	Wi-640	Flush Type			
	Wi-640S	Submerge Type			

2.Manuals

The following manuals are applicable to the KENT USA ROBOSTAR series：

- KENT USA ROBOSTAR Series Operation Manual
  This manual describes the operations of Wi-430、Wi-530、Wi-640 which is divided into 3 major parts as given in following：
  - Basic operations and practical operations
  - Graphic setting and problem prevention
  - Program instructions and functions

- KENT USA ROBOSTAR Series Maintenance & Service Manual
  Describes how to carry out maintenance for Wi series.

Property of Kent USA
Do Not Reproduce

● KENT USA ROBOSTAR Series Machining Parameters List
Lists the machining conditions, cutting feed speed and other data in relation to machining when Wi series. are used. This machining parameter list can be referred when selecting and setting machining conditions.

3.How to use this manual

This manual uses the following symbols：

Symbol	Description
⌧Warning	This symbol indicates improper operation which will result in dangers to the operator.
！Note	This symbol indicates improper operation which will lead to machining errors or machine damages.
✐ Hint	This symbol provides useful information and describes convenient operation methods.

Cautions during operation

⌧Warning

1. Never come into contact with the cutting wire while machining. There is very high voltage on the cutting wire during machining, so never come into contact with the cutting wire; otherwise electric shock may be resulted.
2. When power to the machine is switched on, never open the door of the digital controller. There is high voltage at certain parts of the digital controller, therefore when power to the machine is switched on; never open the door of the digital controller, otherwise electric shock may be resulted.

Property of Kent USA
Do Not Reproduce

! Note

- Please back- up the programs, machining conditions, parameters and other data. The programs, machining conditions, parameters and other data need to be saved in the CNC. Usually these data can still be kept when power is off. However, all the data may have to be removed due to the operation errors or failures in order to restore the new data or repair errors. The basic data are stored in the back- up disk of the machine. Programs and machining conditions that are designed by the operator can only be saved in the CNC.
  Please back- up the programs, machining conditions as well as other important data for storing the accumulated data. To understand more about backing up data, please refer to Part IV in Chapter8.

✐Hint

- Parameters：
  Please setup the required values for operating the machine. If wrong parameters are set, then the machine may result in failure of operation or abnormal operation. For the machine itself, the parameters are very critical data.
- Back- up：
  The text back- up is an auxiliary tool. But in this manual, a back- up means a data back- up. The disk containing the back- up data is called the back- up disk.

Property of Kent USA
Do Not Reproduce

1

Wire EDM Structure

ROBOSTAR WI series are C NC Wire EDM Machine.This machine uses cutting wire as electrode and machining workpiece on XY table. XY table is controlled by CNC controller. KENT USA Wire EDM contains 5 major parts, including Machine base, NC controller Spark Unit, Water system and Optional accessories coolant unit.

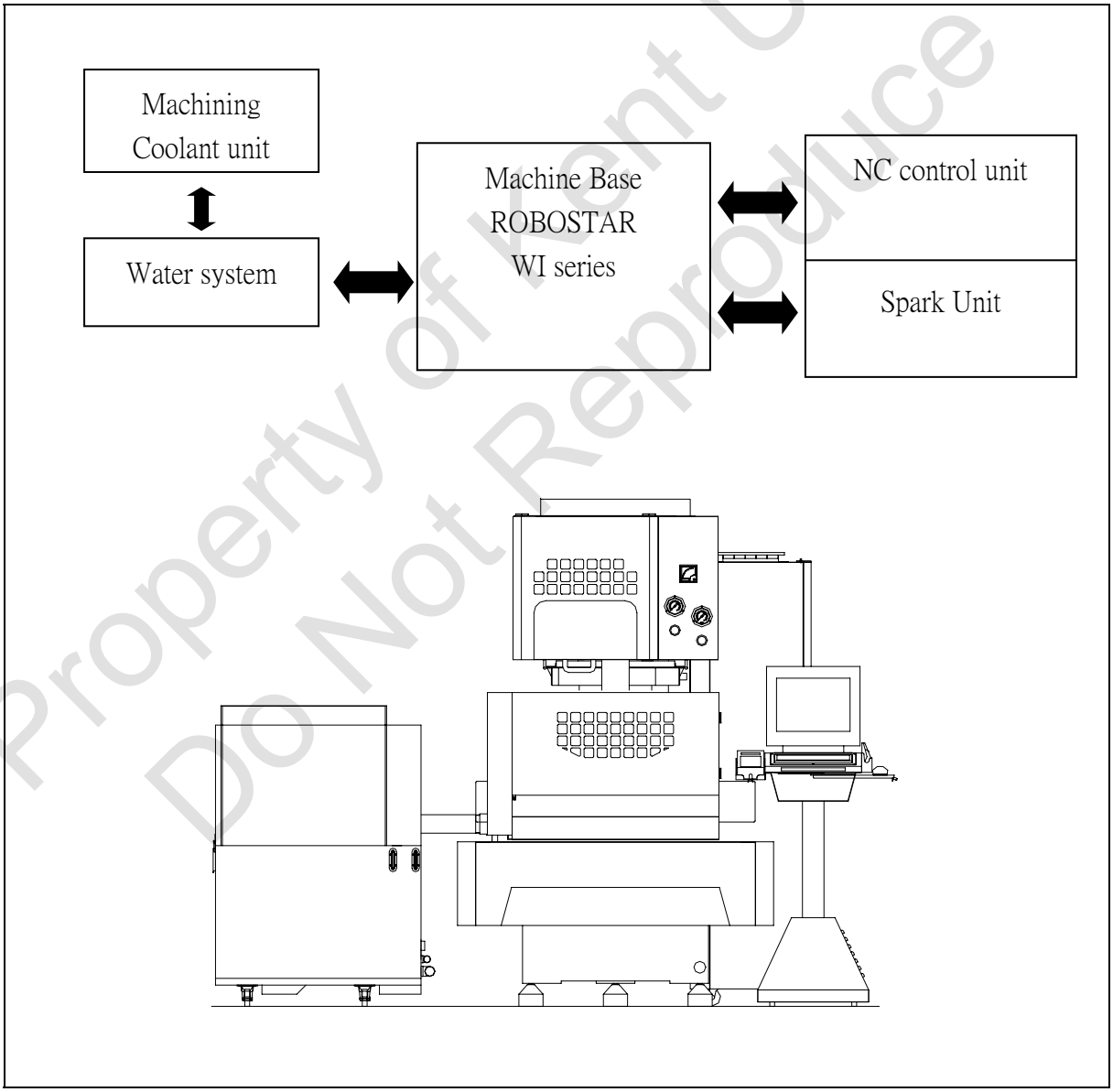

Fig 1-1ROBOSTAR Wire EDM structure

Property of Kent USA
Do Not Reproduce

2 Specification

2.1 Machine Specification

Machine Base

Item		Wi-200	Wi-30	Wi-430	Wi-50
Max. Workpiece dimension	Submergible Type WEDM	550*470*115	660*525*300	660*525*300	830*540*295
	Flush Type WEDM		790*520*300	790*520*300	870*520*295
Max. Workpiece weight	Submerible Type WEDM	500kg	500kg	500kg	700 kg
	Flush Type EDM		500kg	500kg	700 kg
Table travel		210×200 ㎜	400×300 ㎜	400×300 ㎜	400×300 ㎜
WT. Of Machine Base		1700kg	2000kg	2000kg	2000kg
Z axis travel		120 ㎜	300 ㎜	300 ㎜	300 ㎜
UV axis travel		30*30 ㎜	100×100 ㎜		

Water system

Work Fluid		Pure water			
Water tank Capacity	Submergible Type	450L	580L	580L	580L
	Flush Type		270L	270L	270L
Filtration rate		40L/min	40L/min	40L/min	40L/min
Filter	Submergible Type	Paper FilterX2			
	Flush Type	Paper FilterX2			
ION - exchanger	Submergible Type	5L×1	5L×2	5L×2	5L×2
	Flush Type		5L×1	5L×1	5L×1
Control of water conductivity		(2.5 ~ 5.0)X10^4 Ω.cm			

Property of Kent USA
Do Not Reproduce

ITEM		Wi-640	Wi-A70	Wi-A90
Max. Workpiece dimension	Submergible Type WEDM	920*725*350		
	Flush Type WEDM	1040*775*350	1165*680*295	138*760*295
Max. Workpiece weight	Submerible Type WEDM	1000kg		
	Flush Type EDM	1000kg	1000kg	1300 kg
Table travel		640×450 ㎜	750×450 ㎜	900×500 ㎜
WT. Of Machine Base		3500g	4000kg	5000 kg
Z axis travel		350 ㎜	300 ㎜	300 ㎜
UV axis travel		100×100 ㎜		

Water system

Work Fluid		Pure Water		
Water tank capacity	Submergible Type	900L		
	Flush Type	350L	360L	360L
Filtration rate		40L/min	40L/min	40L/min
Filter	Submergible Type	Paper FilterX2		
ION-exchanger	Submergible Type	5L×2		
	Flush Type	5L×1	5L×1	5L×1
Control of water conductivity		(2.5 ~ 5.0)X10^4 Ω.cm		
Servo motor	X/Y axis	AC Servo Motor		
	U/V/W axis			
	Z axis	AC Servo Motor + breaker		
Max. Table feed rate		800 ㎜/min		
Wire Diameter		0.1 ~ 0.33 ㎜		
Wire tension		200 ~ 2400gf		
Wire feed rate		0 ~ 15m/min		
Tolerance		0.001 ㎜/0.0001inch		
Max. Taper	STD. accessories	±15°		
	OPT. accessories	±22.5°		
Guide		Diamond Guide		
Max. wire load		6kg		

Property of Kent USA
Do Not Reproduce

2.2 Sparking Power

Category	Description
Power MOS loop	Power MOS transistor
ON TIME	24 Steps（0.05~0.9 μsec）
OFF TIME	43 Steps (8~50 μsec)
Max. Current	25A
No load voltage	96V
AC power	AC POWER

2.3 Numeric control unit

Code	Item	Description
(1)	Control Axis	X,Y,U,V,Z
(2)	Min. Increment	0.001mm/0.0001inch
(3)	Min. Command Increment	0.001mm/0.0001inch
(4)	Insert Function	Line、Arc
(5)	Max. program setup dimension	±999.999mm
(6)	Position Command	REV and ABS coordinate
(7)	Display device	15”LCD touch screen
(8)	Position Display	5 axis included(X, Y, U, V, Z)
(9)	EDM DATA	0 ~ 999(1000 groups)
(10)	Data Input Device	Flash drive、Network transmission、RS-232
(11)	Graphic Zooming	0.001~99.999
(12)	Rotation	±0.001°~±360°
(13)	Mirror	Mirror on X and Y axis
(14)	Graphic Simulation	3D display on X, Y, U, V axis
(15)	Feed rate speed	Fast moving：400mm/min Manual：100, 200, 300, 400mm/min Dry Run：0 ~ 400mm/min
(16)	Wire diameter compensation	±99.999mm
(17)	Working History、100Coordinate system、Perpendicular rectifier、Retract to original point、Screen saver、Taper Cut、Maintained history、Axis exchange、Back slash compensation、Pitch compensation、Parallel compensation、Software limit、Safety zone、Dry Run、Single block execute、Machine lock、Selected block executed、Selected hold、Auto Positioning (Hole、Center、Slit、Edge Side、Board Width、Arc)	

Property of Kent USA
Do Not Reproduce

	、Manual Data Input(MDI)、Return to Start point、Broken wire return 、Reference point return、Original path return、Path tracking、Working path display、Background Editing、Diagnosis、Program Edit/Copy/Delete、Upper/Lower Graphics Machining、Taper Cut、Arc corner、Metric/Inch、Short circuit retract、Chinese/English、Single block hold、Auto Corner function。

2.4 Environmental Condition

Main Power	AC、phases50/60Hz
Power required	11KVA(without chiller) 13KVA(with chiller)
Environment	Temperature 5°~40°C。 * Room temperature 25±1°C and no dust is necessary for high accuracy machining. Humility：Lower than 75%RH Vibration：Lower than 0.6mm/S^2 (0.06G)
Ground	To keep the stability of machining, machine grounded is necessary. Use10 Ω for grounding.
Protection	Avoid Noise. Prevent the interference of electric wave

2.5 Standard and Optional Accessories

Standard accessories	
Perpendicular rectifier	1 set
Diamond Guide(φ 0.25mm)	1 set
Wire(φ 0.25mm,3kg)	1 set
Water tank(without chiller)	1 set
Remote Control	1 set
Tool Box	1 set
ION- exchanger(5L)	1 bag
Filter	2 pcs

Optional accessories	
φ 0.10 ~ φ 0.33mm Diamond guide	22.5° Wide angle flush head
CAD/CAM	Voltage stabilizer
3Ror EROWA holding jig	MPG
Chiller	
Water conductivity meter	
Wire tension meter	
Wire speed meter	

Property of Kent USA
Do Not Reproduce

3 Components

3.1 component Name

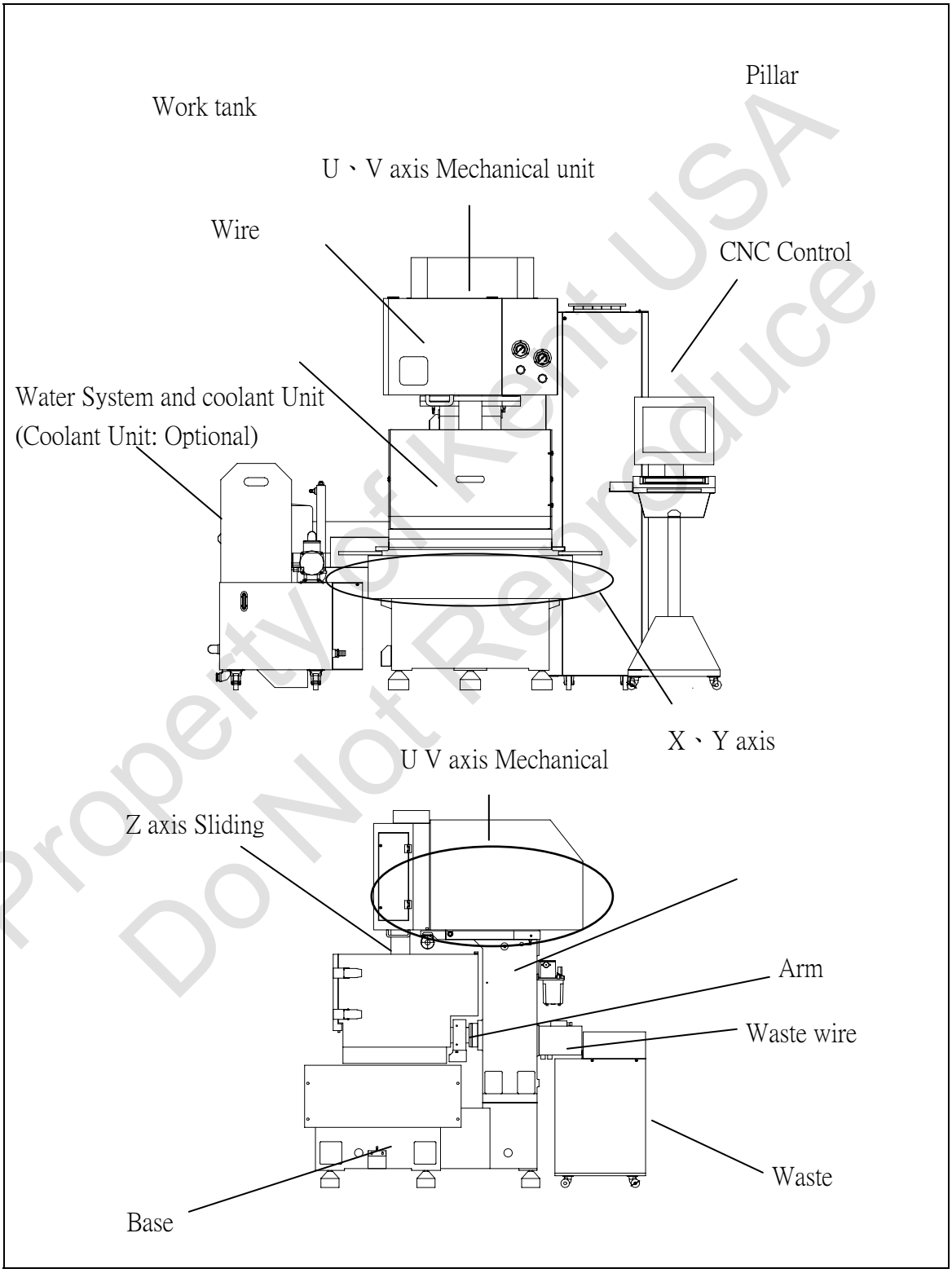

Figure 3-1.1 Wire Cut Component

Property of Kent USA
Do Not Reproduce

3.2 Function of Components

Hint ✐

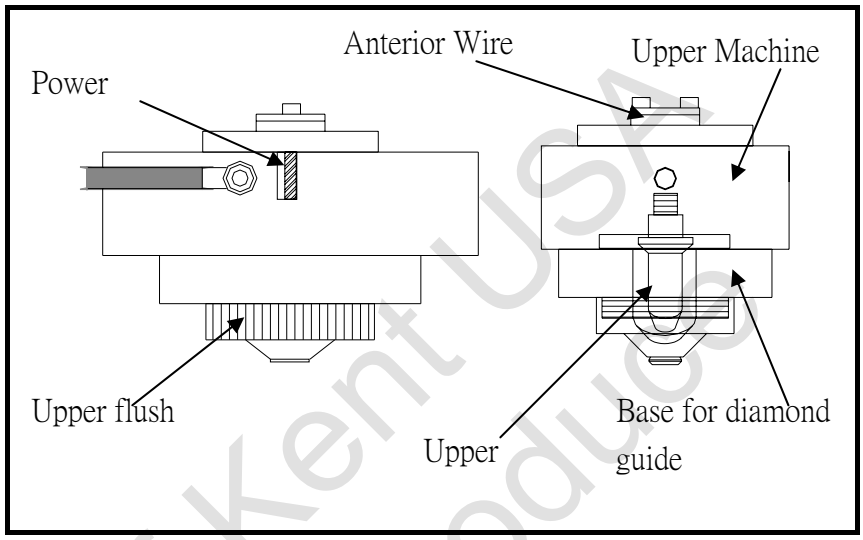

Figure 3-2.1 Upper section of wire guide

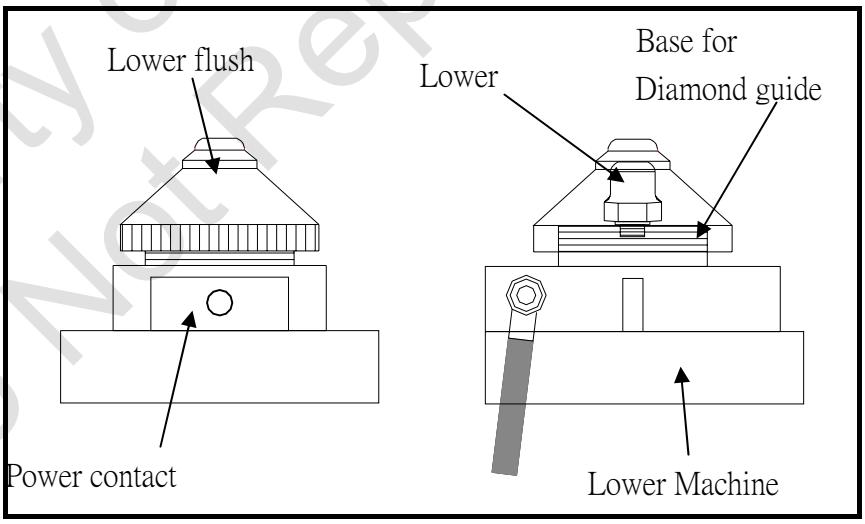

Figure 3-2.2 Lower section of wire guide

Property of Kent USA
Do Not Reproduce

Diamond Guide: It is used to support cutting wire. Diamond guide contains hi-precision ceramic guide. It can be used for the wire size of the wire size of 0.1mm~0.33mm. Please select the suitable wire guide for the cutting wire.

Flushing Head: Fluid would flush from flushing head. The design of the flushing head helps the working fluid to the cutting area efficiently. Larger flushing head is designed for larger taper machining.

Power contactor: Power contactor provides the voltage on cutting wire. Because the power contactor will contact with cutting wire frequently, the erosion marks will appear on the contactor and cause to break the wire easily. Thus please replace power regularly.

Flush fixed base: Flush base use water to send the cutting wire from lower machine head to waste wire tank.

Upper Support Arm: Upper support arm can adjust the height of upper machine head base on the thickness of workpiece. **Press +Z or –Z on the control panel to adjust the height of machine head. On the Z axis, a piece of table place stop plate on the holder, may be used to install the Alignment tool .**

Property of Kent USA
Do Not Reproduce

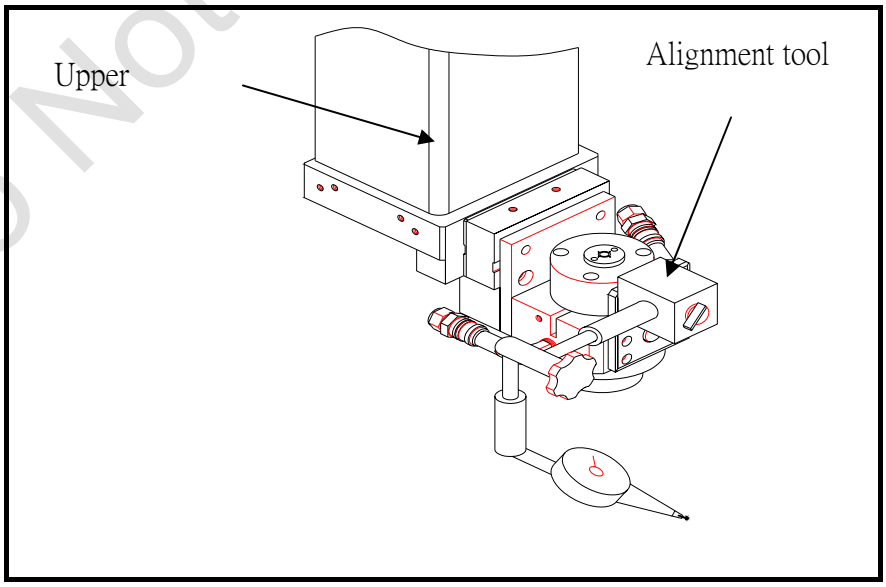

Figure 3-2.3 Upper support arm

Work Table

Work Table contains a table and overhanging bridge. Adjust the corrective device base on the size of workpiece.

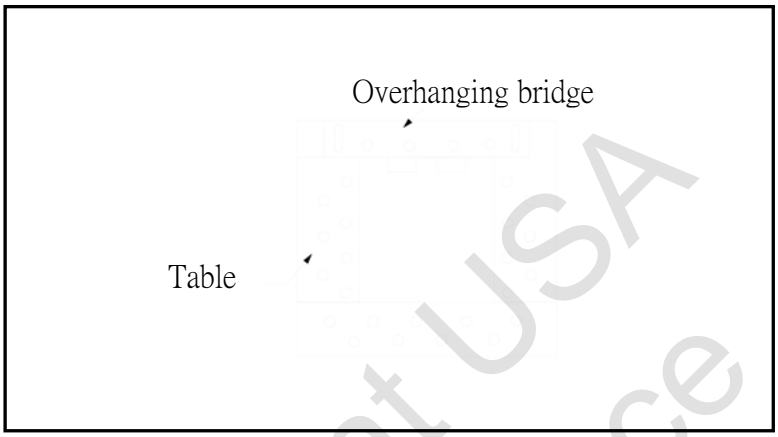

Figure 3-2.4 Work Table of Wire EDM

Jig

To learn more about jig tool, look up to 7.7

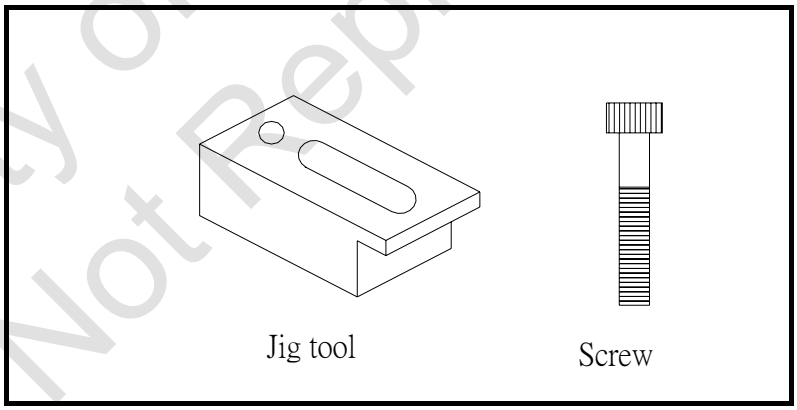

Figure 3-2.5 Jig tool and screw

Property of Kent USA
Do Not Reproduce

Lower support arm and Supporting Water Guard

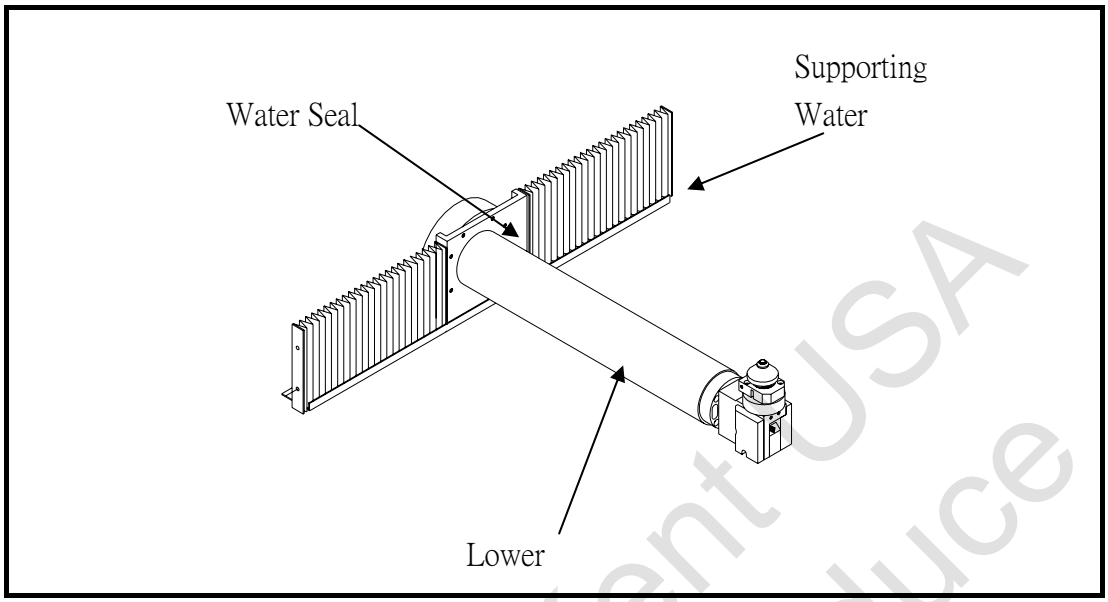

Figure 3-2.6 Lower support arm

Water seal board and supporting water guard can prevent water leaking from water tank. Supporting water guard is fastened on water seal board.

Water pressure gage: Water pressure gage is used to detect the water pressure on upper and lower flush head. Water pressure is increased when the Pressure increase setting is activated in Parameter setting. Actual pressure is determined base on the distance between flush head and surface of workpiece.

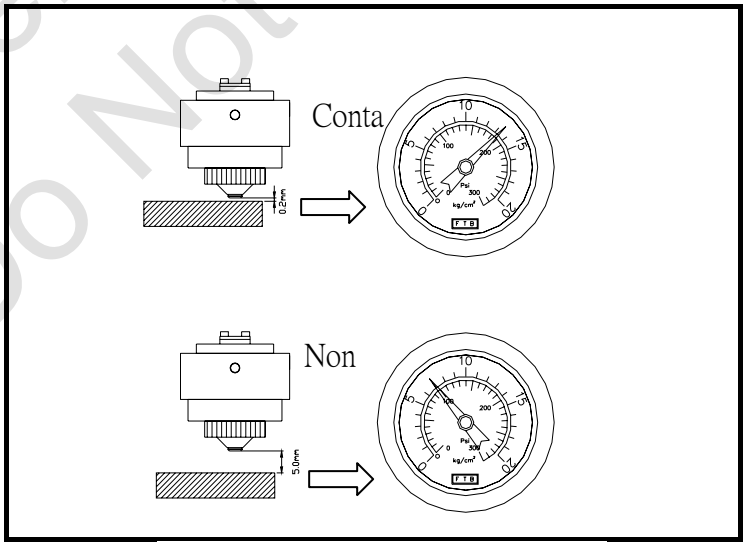

Figure 3-2.7 Water pressure Gage

Property of Kent USA
Do Not Reproduce

Work Tank: Control the amount of the work fluid.

(1) Water Pump will pump the fluid to Mechanical device. The amount of fluid sent by Water tank is depending on the setting.

(2) Filtrate the debris.

After dump the waste water in waste water tank, machine will filter the waste water through the filtration system and back to clear water tank

(3) ION- exchanger contains resin, which can use to adjust the water resistance . While the machine is ON, the water resistance detected devic begin to function. If the water resistance is lower than 25KΩ, Water Pump will pump the water to ION- exchanger unit and back to water tank until the water resistance is reach 50KΩ.

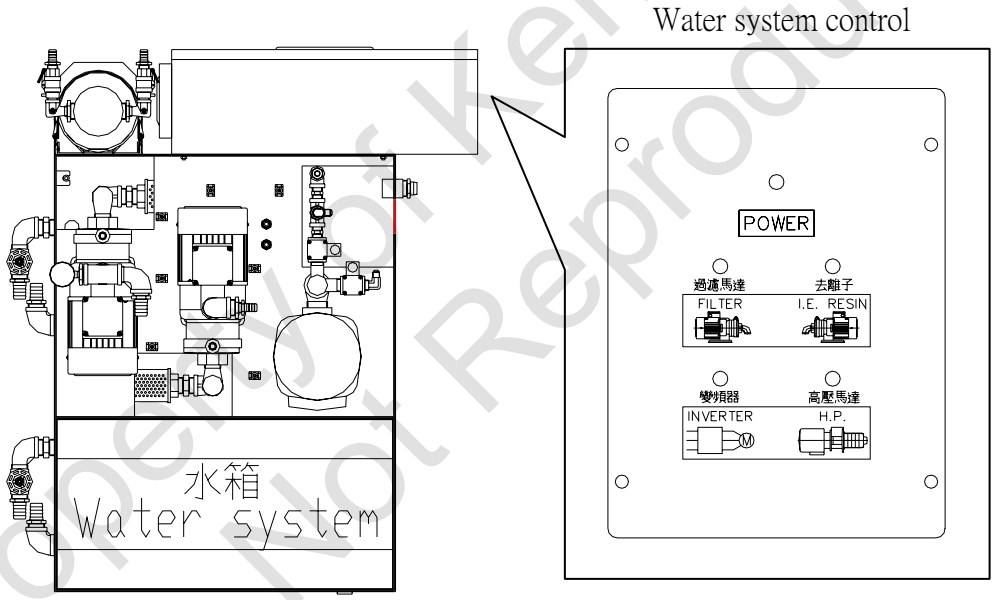

POWER：Water system power LED light. When《E.STOP》 is ON, LED in ON.
FILTER：LED of Water Filtration System Pump. While the LED is on, it means system error
I.E. RESIN：LED of ION-Exchanger. While LED is ON, it means system error.
INVERTER：LED of High Pressure Pump. While LED is ON, it means system error.
H.P.：LED of Fast speed water inlet pump. While LED is ON, it means system error

Figure 3-2.8 Wi-A30E Flush Water Tank

Property of Kent USA
Do Not Reproduce

! Note: When Work Fluid is too low, please add pure water in water tank.

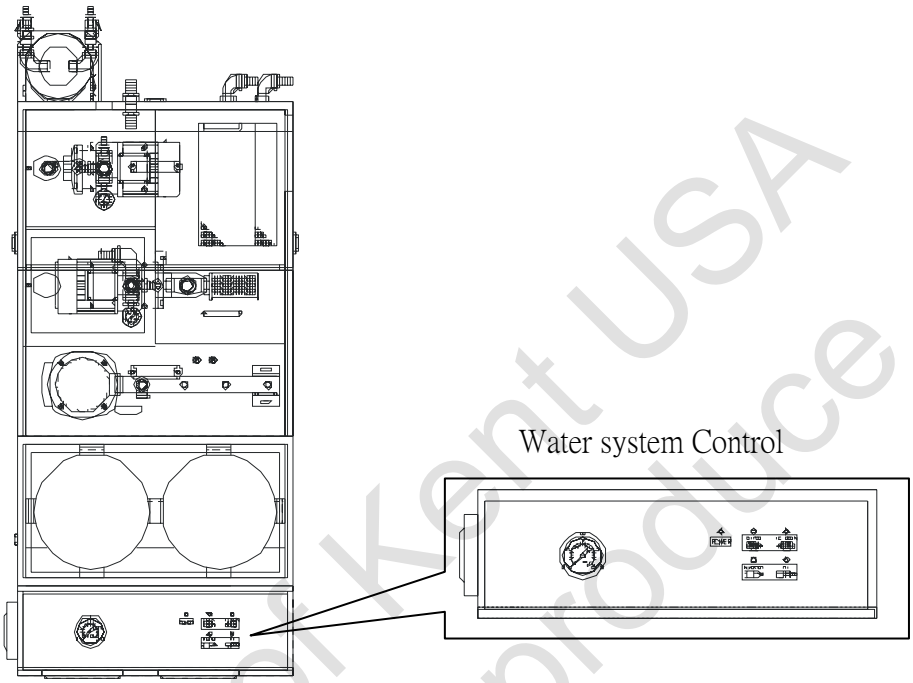

POWER：Water system power LED light. When《E.STOP》 is ON, LED in ON.
FILTER：LED of Water Filtration System Pump. When the LED is on, it means system error
I.E. RESIN：LED of ION-Exchanger. When LED is ON, it means system error.
INVERTER：LED of High Pressure Pump. When LED is ON, it means system error.
H.P.：LED of Fast speed water inlet pump. When LED is ON, it means system error

Figure 3-2.8 Wi-A60E Water Tank

! Note: When Work Fluid is too low, please add pure water in water tank.

Property of Kent USA
Do Not Reproduce

Coolant Unit: This unit is used to control the temperature of working fluid (Chiller). Temperature of Working Fluid is important to the stability and the precision of workpiece.
(Chiller: optional accessories)

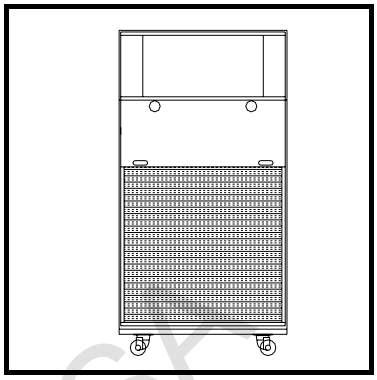

Property of Kent USA
Do Not Reproduce

4 Axes and Moving Direction

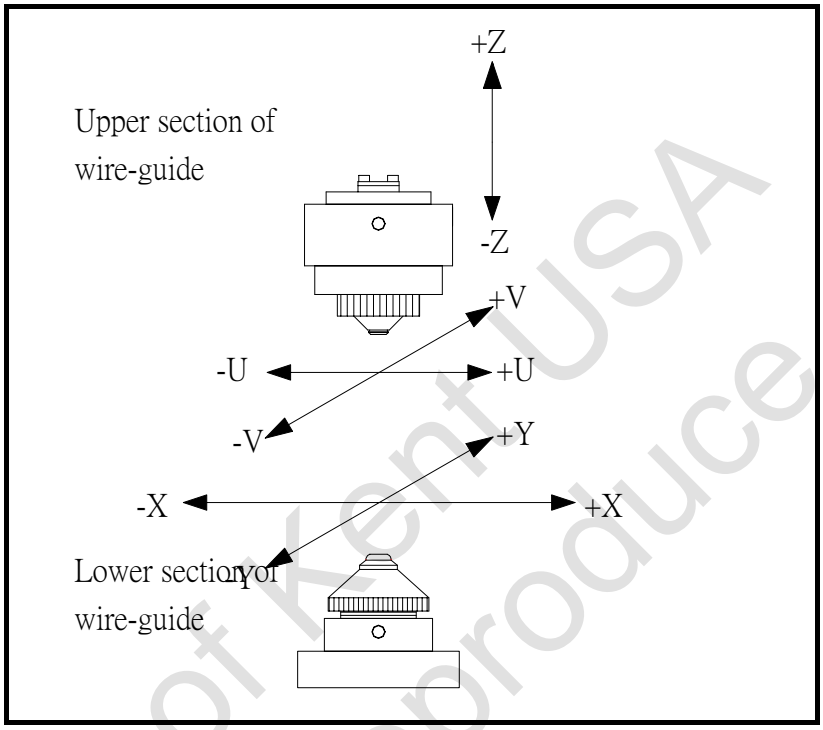

Figure 4-1 Axes and moving Direction

- The moving direction of each axis is defined by the position of upper and lower section of wire guide.
- Work Table is moved follow by the X and Y axis instead of lower wire guide.
- U axis and V axis are paralleled with X and Y axis.
  U axis and V axis movement is used for Cone Shape machining. It's not suitable for Vertical machining.

! Note

The movement of X,Y axis is on work table, not on the lower wire guide.
The movement of U, V axis is on upper wire guide.

Property of Kent USA
Do Not Reproduce

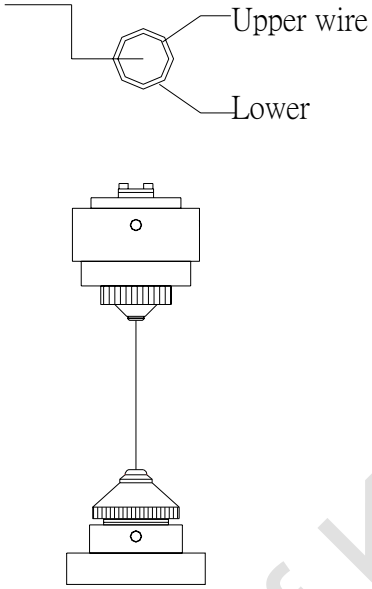

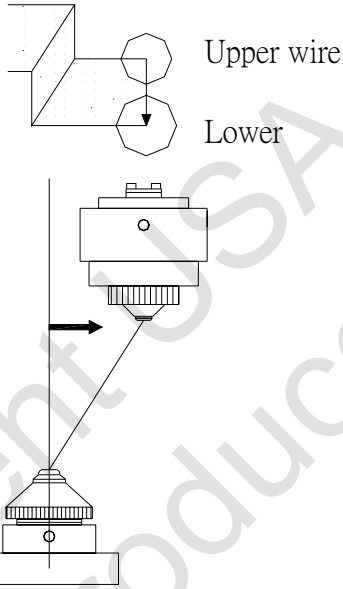

Vertical Machining
will Not move along U and V axis.
(Work Table is moved, instead of

Cone shape Machining
Upper wire guide will move along
U and V axis. (Upper wire guide

Property of Kent USA
Do Not Reproduce

5 Moving

5.1 Machine

（1）Use Forklift to move machine（shown as below）

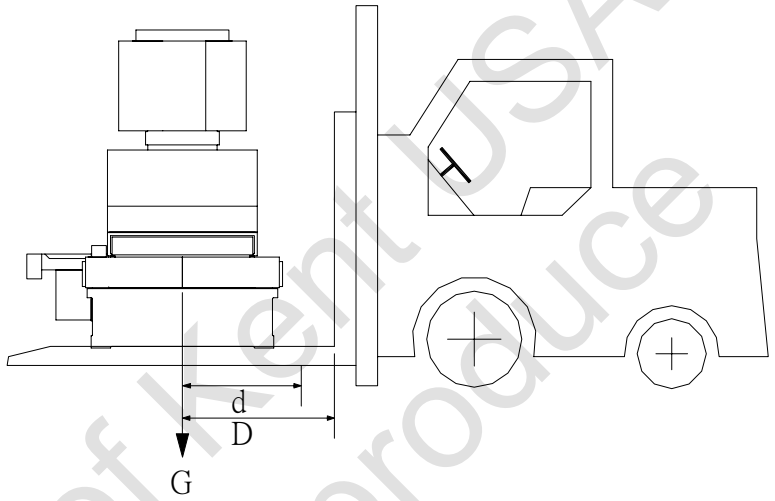

G：Center Weight
d：Wi-30E: 385 ㎜、Wi-640: 635 ㎜
D：As short as possible

（2）Wi-430、Wi-30E、Wi-50E: Use the forklift with 3 ton capacity.
Wi-640、Wi-70E、Wi-90E: Use the forklift with 5 ton capacity

！ Note

＊ When moving the machines base, please keep the balance without tilting.
＊ While using forklift, be sure the center weight is slightly tilted backward.
＊ While using forklift, confirm the moving path and be sure there is enough space for turning.
＊ Qualified forklift driver is required.

Property of Kent USA
Do Not Reproduce

5.2 Power Generator

（1）Use Eye Bolt to lift Power Generator. （There are 2 eye bolts on the top of Power generator）.

shown as below

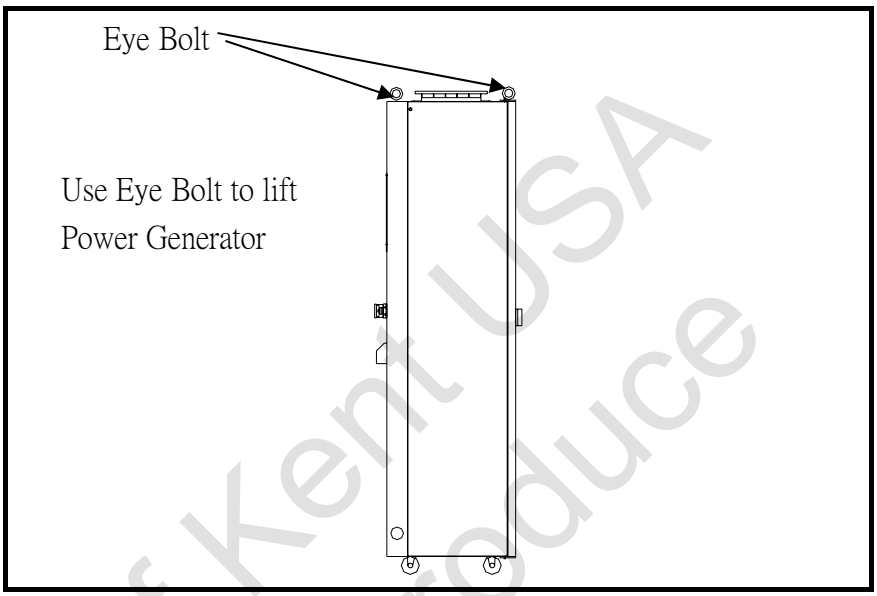

（2）You can push to move the power generator on the ground.

！Note

＊ Be sure the ground surface is smooth and the path is clear while moving Power generator.

＊ To prevent the power generator tumble, be sure there are people on each side of power generator.

5.3 Water Tank

（1）Use Forklift to move the water tank unit,（Shown as below）

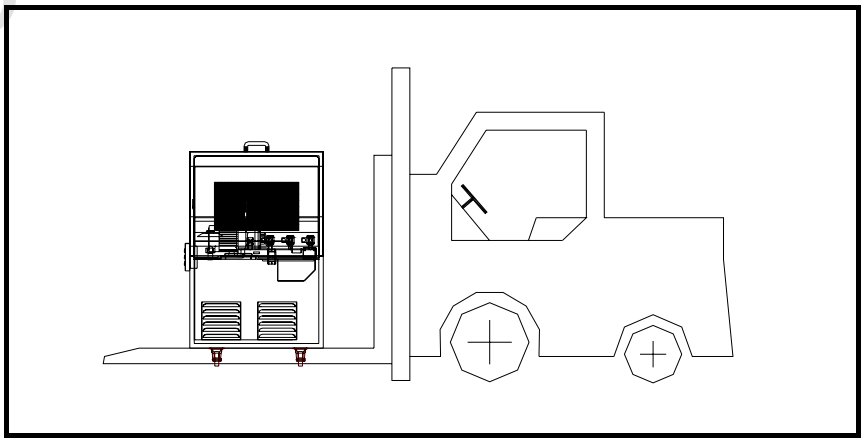

（2）Water tank can be pushed while it’s on the ground.

Property of Kent USA
Do Not Reproduce

6 Location

CNC EDM is a precision machine. Please carefully select an installation site according to following points :

1. Install the machine at less dust and bright place, but avoid being exposed under direct sunlight.

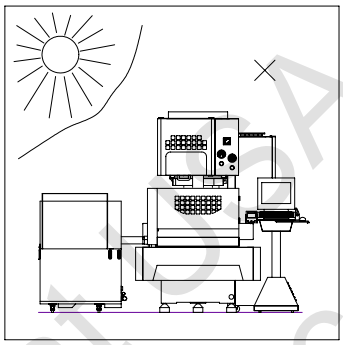

2. The machine must be installed at a well-ventilated and temperature regulated place (Suggested work temperature to be 25℃). Avoid air conditioner to blow air directly to the machine.

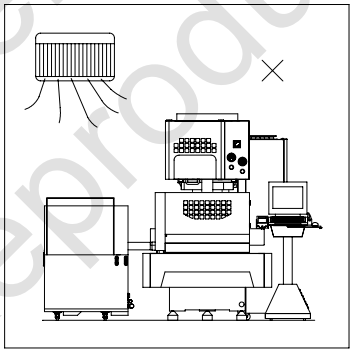

3. The machine must be installed on a no-vibration and solid ground.

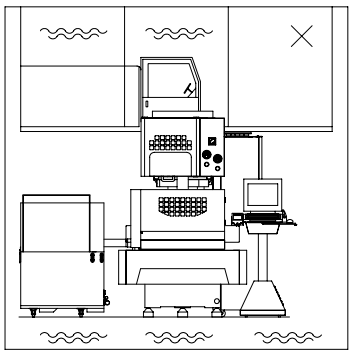

4. The machine surroundings should be reserved a sufficient space (at least 300mm) for the convenience of loading workpiece and machine service.

5. The path where the machine will pass should be safe and wide enough.

Property of Kent USA
Do Not Reproduce

6.1 Requirement

（1）Provide enough power for the power supplier, voltage stabilizer is recommended; Protection is necessary during the installation.

（2）For safety reason, machine needs to be grounded and operator is suggested to stay on a wooden plane.

6.2 Leveling

（1）Put Level on work table

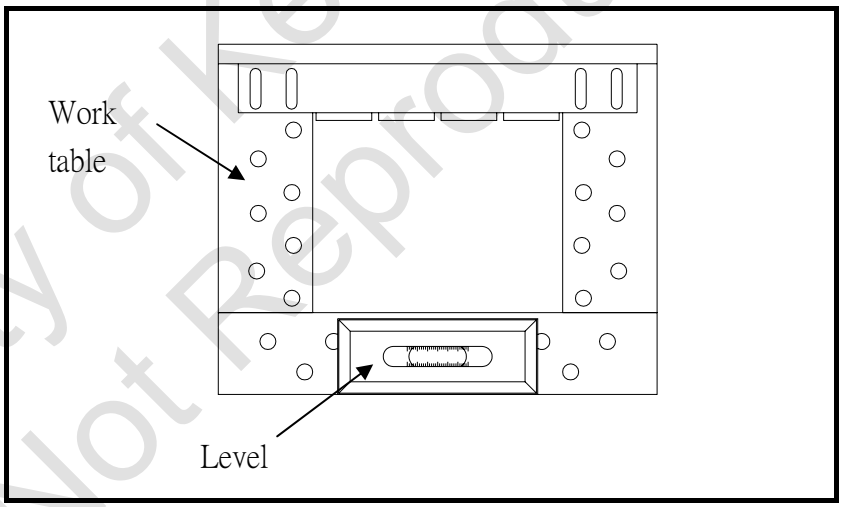

（2）There are 5 adjustable screws under machine base. Using wrench to level work table.

Property of Kent USA
Do Not Reproduce

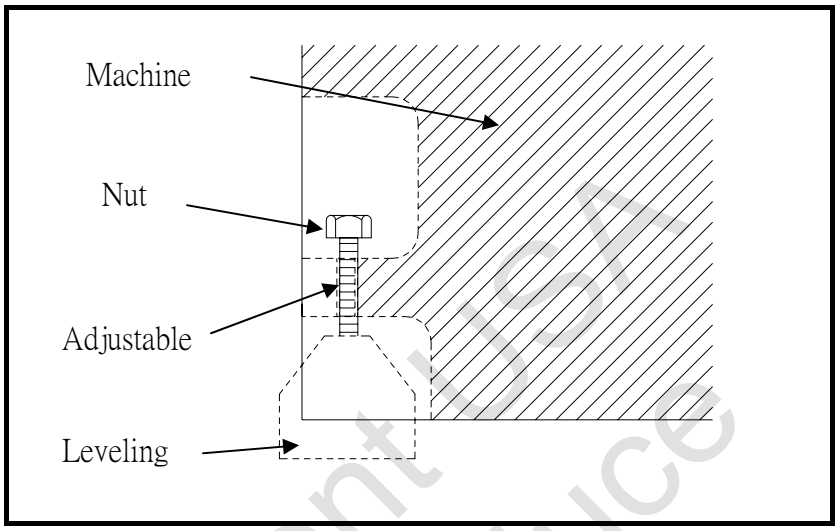

（3） Repeat the leveling procedures to make sure having the best leveling on work table.

6.3 Clean grease

In order to prevent rust on parts of machine during transportation and storage, put the grease on the surface of parts is necessary. Remove the grease before using machine. After grease is removed, please inject lubricant oil.

Mobil No2. 68

Stork 70087 P

Property of Kent USA
Do Not Reproduce

7 Installation

Before install machine, make sure the power source is stable and reach the requirement voltage. If the voltage provide is not sufficient and unstable, it will impact the working efficiency or cause the controller malfunction. Voltage stabilizer is recommended.

7.1 Remove the lock block

（1）Remove the metal cover on upper machine head and on lower machine base.

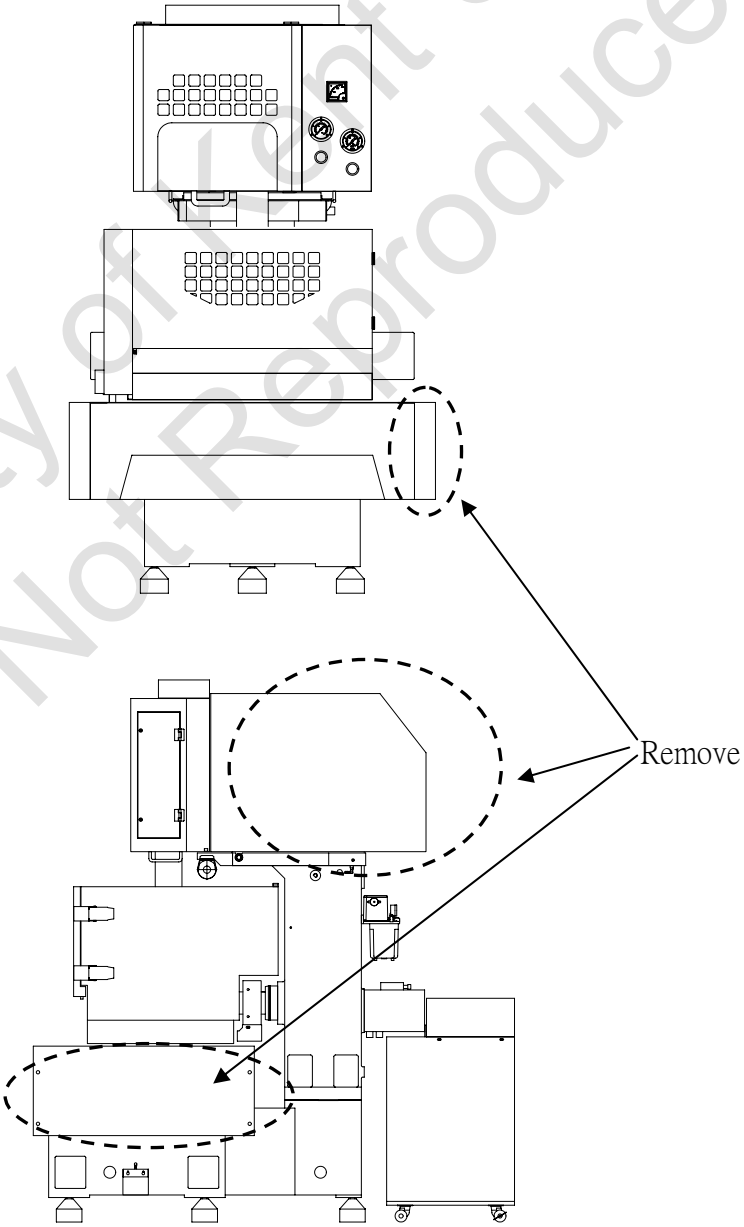

Property of Kent USA
Do Not Reproduce

（2）Remove the lock block on X, Y, U, V axis.

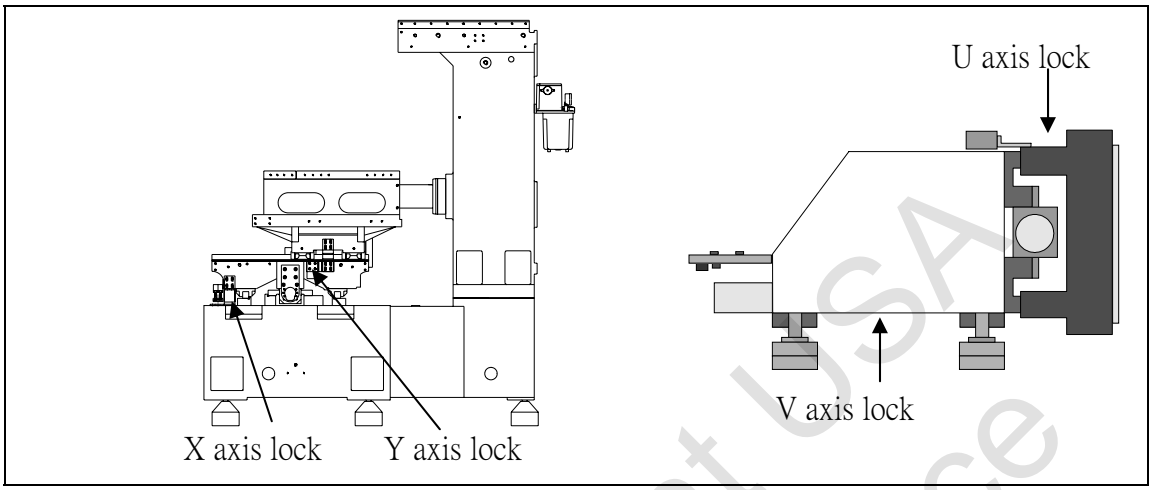

7.2 Connect all connectors

Connect all connectors from machine base to power generator and water filtration unit. Shown below:

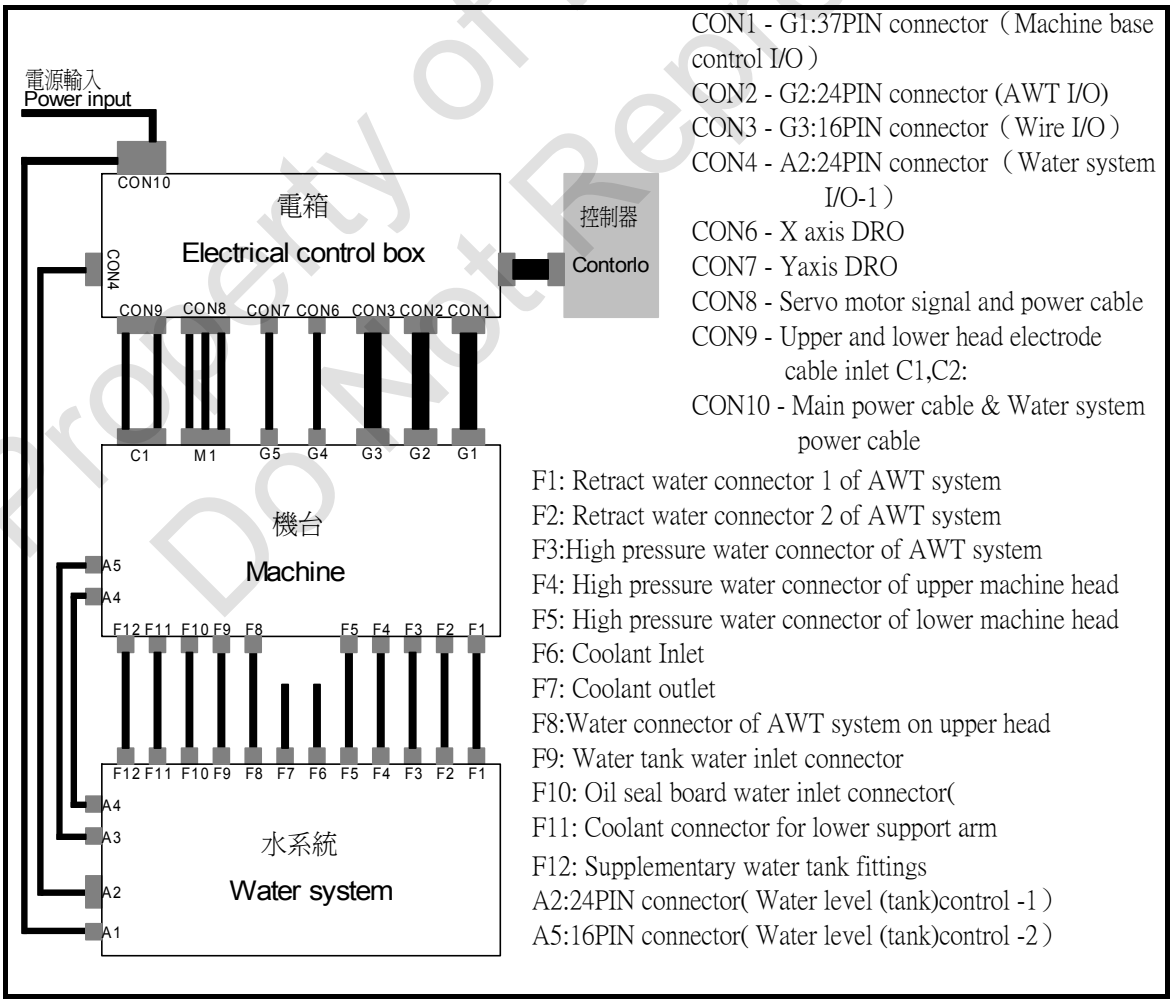

Property of Kent USA
Do Not Reproduce

（1） Electrical Control Box

1. Connect USB line to controller USB2、USB3。
2. Connect CN8 cable properly
3. 5mm wire has to contact the ground
4. Connect 0.75mm*2c(AC110V) to 4pin cable

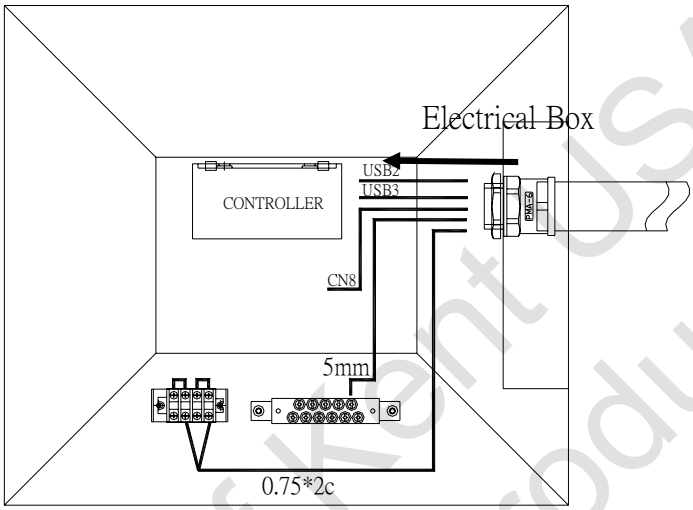

（2）Connect AC servo motor ENCODER cable and power cable to DRIVER。

Property of Kent USA
Do Not Reproduce

(3) Connect the electrode cable from machine base to the copper piece on box C of power generator. The connection method is shown as bellow:

①Connect the black electrode cable on upper machine head to the copper piece "P" on Power generator. Connect White cable to the connect point "WHP_WIRE" on Power generator.

②The connection method of lower machine head is the same as upper machine head.

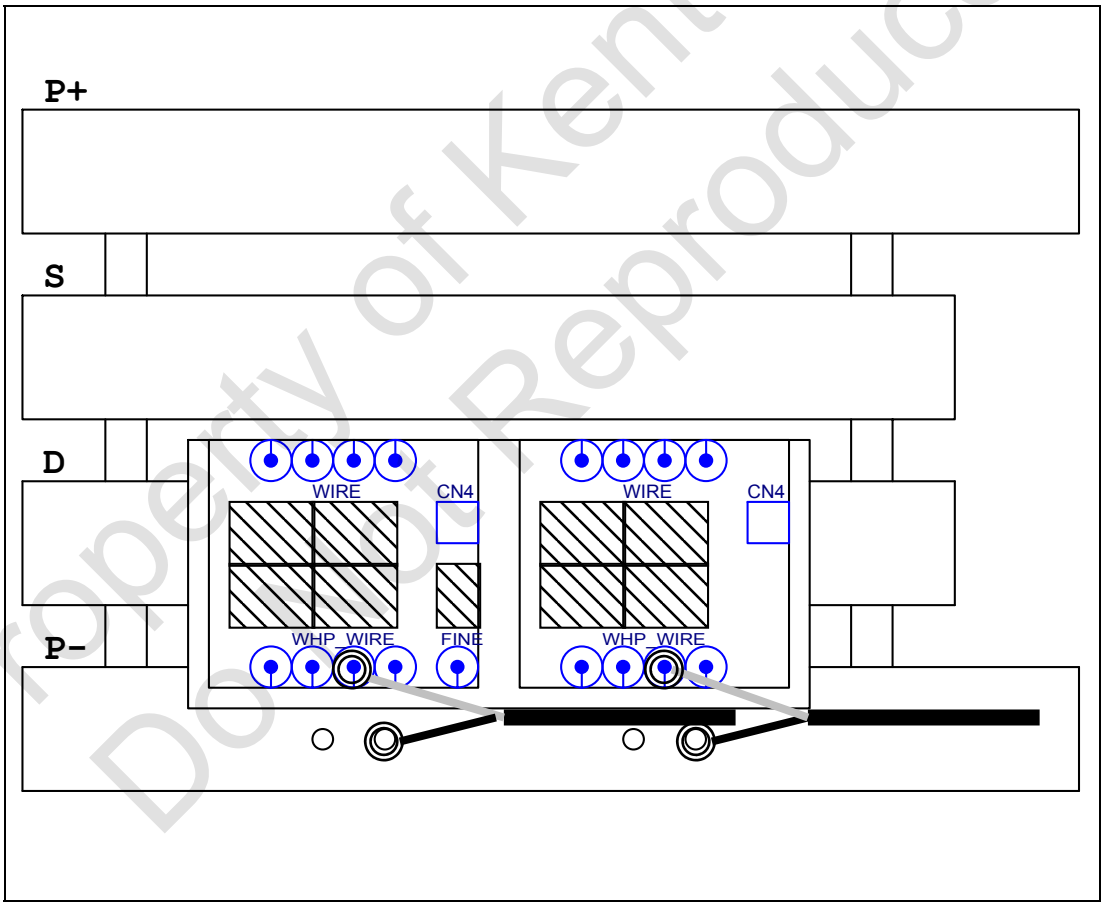

Property of Kent USA
Do Not Reproduce

7.3 Add water to water system

Please use the pure water as working fluid. The working fluid need to be add into both clear water tank and sewage tank. To understand more about the water requirement, please refer to two. 2. specification - water tank capacity and next table

	Clear water tank	Sewage tank
Submerge Type	Full	Half
Flushing Type	Full	Half

※ Please add the water into the water system until the water level meter is at the full position.

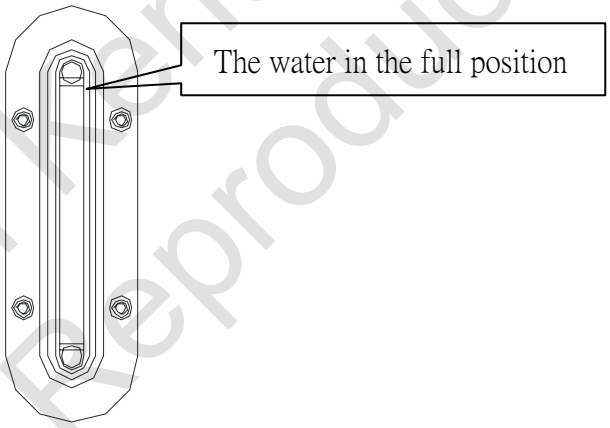

※ When the water level meter is dirty, please clean from the steel cover (one of the hole you could put your head to clean inside) to inner surface.

Property of Kent USA
Do Not Reproduce

III. Operation Panel

Property of Kent USA
Do Not Reproduce

1 Key-Board／ Monitor

1.1 Screen display

The screen is placed on the top of the control box, 15” LCD panel. It is used to display all function buttons screen including coordinates, program, path compensation, spark parameters setting. Shown as Figure 2-1:

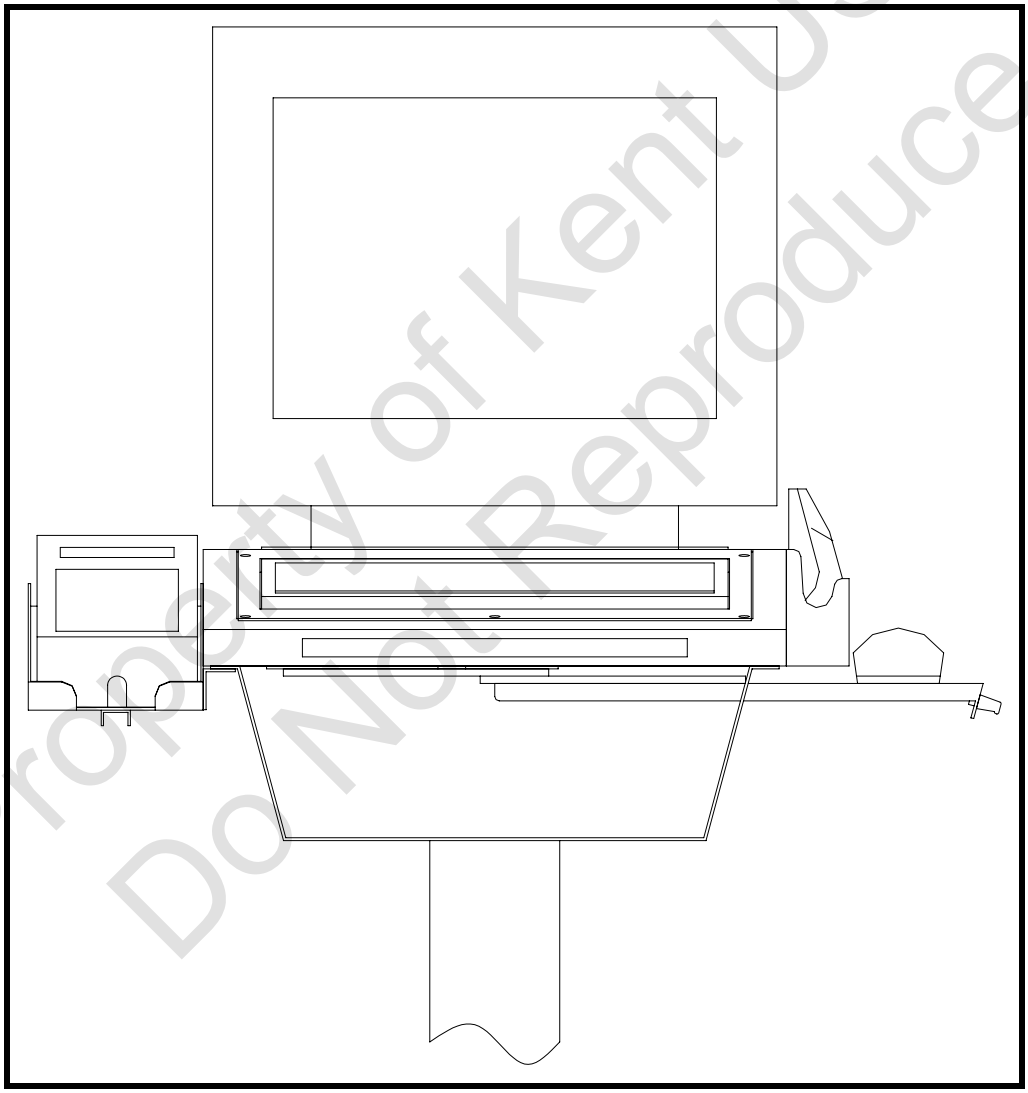

LCD touch screen

Property of Kent USA
Do Not Reproduce

1.2 Screen Function Key

- Coordinate
  - Coordinate1
  - Coordinate2

- Manual
  - Original Return
  - Edge Finding
  - Slit Finding
  - Arc Center
  - Out Circle Center
  - Side Center
  - Edge Cornet
  - Vert. Adjust
  - PARAL.COMP.
  - Coor. Table
  - MDI
  - Original Path
  - Pitch COMP.
  - Orth. COMP.
  - Polar Correct

- Machining
  - Edit Orog.
    - Open File
    - Save/Delete
    - Create New File
    - RS-232
    - Search text
    - Undo modify
    - Reod modify
    - Retn Main Prog.
  - Simulation
    - BkGrnd SIMU.
    - Step Draw
    - CONT. Draw
    - Overlook Graph
    - Full Graph
    - SIMU. Cutting
    - Error Message
    - PARAM Setting
    - Comprehens
  - Cutting
    - Fill
    - Overlook
    - Setup
    - Cmps.
  - Cut PARAM.
    - Save
    - Copy
    - Upload

Property of Kent USA
Do Not Reproduce

- Smart Func.
  - S-Code
  - Fly Cut
  - Arc
  - Corner
  - DM SET
  - AWT
  - ByPass
- Cut Record
  - Brk.Pt. Record
  - Cutting history
- Program
- Draw

- Message
  - Message
    - Error Message
    - Key trace
  - Maintenance
  - Motion states
    - Status 1
    - Status 2
    - Status 3
    - Status 4
    - Status 5
  - I / O States
    - I/O Status
    - HARD KEY
    - AWT
  - USB States
    - MOTION
    - WIO
    - USB KEY

- System
  - User Param.
    - Parameter 1
    - Parameter 2
    - Parameter 3
  - Maker Par.
    - System
    - Position
    - Machining
    - Pitch X
    - Pitch Y
    - Pitch Z
    - Pitch U
    - Pitch V
    - Pitch W
  - WIO set up
    - Parameter 1
    - Parameter 2

Property of Kent USA
Do Not Reproduce

- Tool
- Shut down
- Notebook
- Calculator
- Eject USB
- Keyboard

Property of Kent USA
Do Not Reproduce

2 Information on the monitor

Messages and Status are shown on the screen

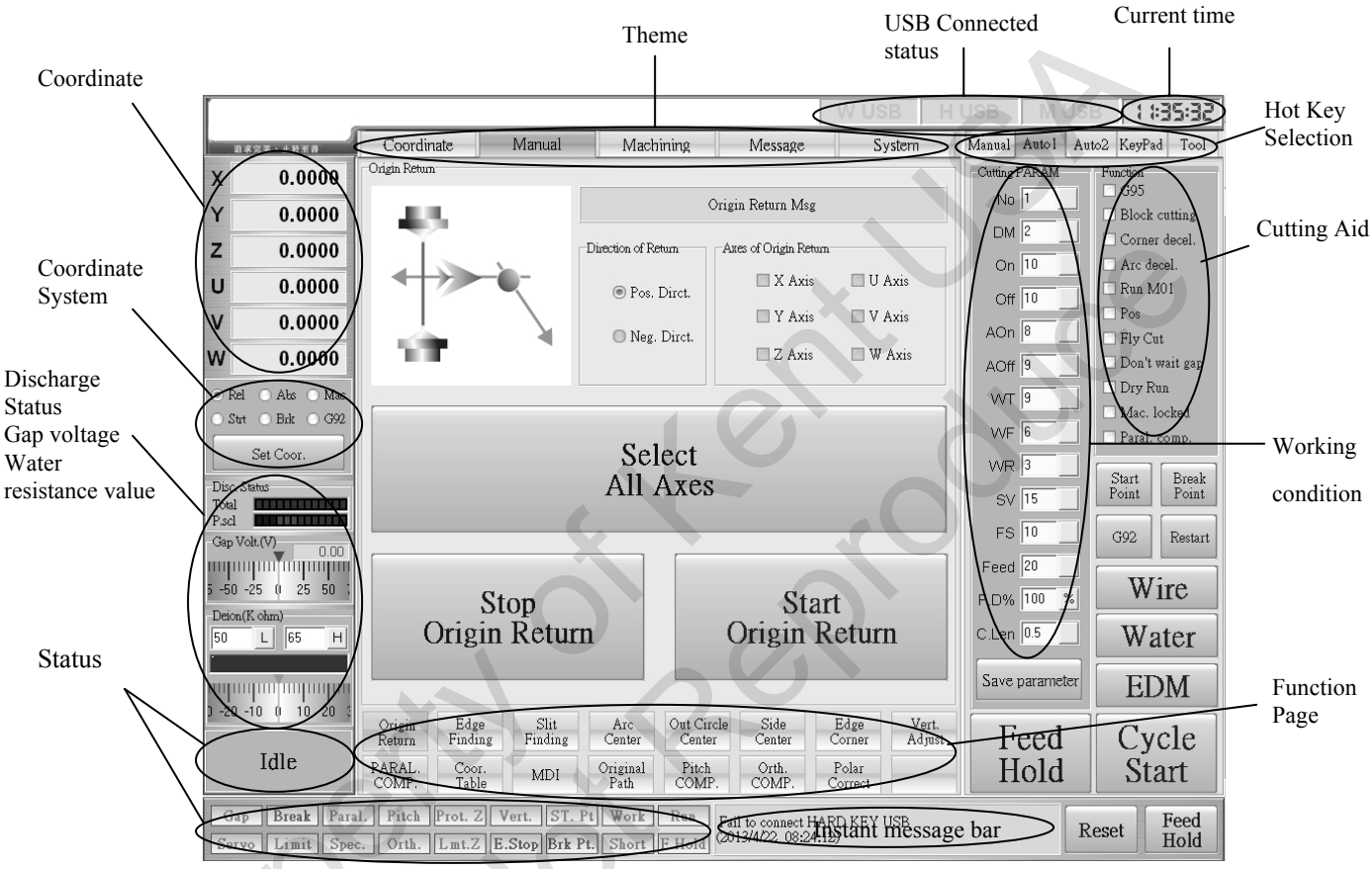

Property of Kent USA
Do Not Reproduce

3 Machine Operation Panel

Since the machine is controlled by touch screen, all of the function keys are shown on the monitor. Some functions can be operated by the remote, however most of them need to be worked on the touch screen.

Hot key area can be divided into 4 parts【Manual】、【Auto1】、【Auto2】、【KeyPad】. 4 of them have their specific function.

1.1 Manual

Go Pos.		Position the coordinate. (REV. & ABS) provides operators to setup their own coordinates. The machine can move multiple directions, not just moving in one direction. Please refer to Chapter4 Section5.7.
Go Vert		Press the button to make U, V axes back to perpendicular position. Light will be ON after re- positioning. ※ Please do AUTO or Manual VERT first.
Z-LMT Go Lmt.		Press the key, Z axis will automatically go downward to the setup point. ※Point need to be setup to run this function.
S.Pt Retn (Go straight)		Start Point Return. When some abnormal functions occurred, such as “REVERSE ALARM”, press this button to return the wire back to start point base on the coordinates on POSITION screen.
Org.S.Pt		
H.Pt Retn (Go straight)		(HOLD POINT RETERN). When the wire breaks during cutting, press this button to return the table back to hold coordinate after threading. Or when cutting a taper hole and the debris is too big to be removed from workpiece, or when the workpiece is too thick to get it out from below because of the short distance between the head and the lower plane of the workpiece, PRESS THIS BUTTON to return to the hold coordinate after the debris is removed.
Org.H.Pt		

Property of Kent USA
Do Not Reproduce

Go G92		Press the button, machine will go straight to the last G92 point.
Software Limit.		Press the key to cancel the software limit, press again to enable the software limit.
Set/Cancel Z axis downward		Press the key to cancel the Z axis downward limit. Press the key again to resume the function. This function is to prevent the machine collides with the workpiece when the height of the Z axis is not set up properly.
Manual Threading		Press this function and the light will be ON. It means this function is activated. Press this button again to cancel this function. Don't press this button to cancel this function unless the wire threading function is completed.
Hold		Press the key, the machine will be at the pause status. Pressing HOLD on the remote control will result the same.
Manual Mode 	Inc._Jog：Press「Inc. Jog」, select《*1》、《*10》、《*100》、《*1000》one of them to assign the moving speed of machine. Press one of the direction to move the machine, however the machine will only move one unit at a time.	
	Continue：Press「Continue」and select《*1》、《*10》、《*100》、《*1000》one of these to assign the moving speed of machine. Press the direction key to move the machine. Release the key, to stop the movement.	
	Close：Press「Close」, the machine head will stop at this time, click other options to run your process.	
	MPG：This function needs to work with the hand wheel. Please refer to Chapter4 section 5.5 to learn more.	
	FUN：This function is under the【Manual】mode, it needs to be operated with the MODE key on the remote control. Select the FUN key on the controller, when the light is on press MODE. The function under Manual Mode will switch in order. (Ex: Find Reference →Edge Find →Find Arc.)	

Property of Kent USA
Do Not Reproduce

1.2 Auto1

Please refer to **Chapter 4 section 10.3** 「Parameter Setting」

1.3 Auto2

Inverse interpreted M code function	The machine cannot Trace to SI Block when there is M code. Click the function to remove the status.	
Display the machining status	When the functions under【Manual】 is completed or M code appears during the machining, a message will show on the screen. Check the message, the alert message will not show again next time.	
Check the gap voltage during machining	This function will operate automatically during the machining. It cannot be setup.	
Start discharging short protection	When the function is on, the machine will move only when the value of gap voltage is above the discharging short protection voltage.	
Fly Cut Length (mm)	Here only display the setup Fly Cut Length. To learn more about the setup, please refer to Chapter 4 section 10.5.2 「Fly Cut setting」.	
Hold Time (s)	If there is a M21 edited in the NC Program, the hold time between every block will be enabled. (Unit：s)	
Retreat distance length (mm)	When running the Retreat Distance during machining, the length of retreating can be setup over here. (Unit：mm)	
Z axis arise distance (mm)	【Auto1】→ Z axis arise Distance value can be setup right here(Unit：mm)。	
Org. Path to Start Point(Under displacement mode)	Org. Path Start Pt.	This function has the same operational method as 【Auto 1】→「Org.S.Pt」. Please refer to 「Org.S.Pt」operational method.
Org. Path to Brake Point(Under displacement mode)	Org. Path Break Pt.	This function has the same operational method as 【Auto 1】→「Org.H.Pt」. Please refer to 「Org.H.Pt」operational method.
Org. Path Retreat G92	Org. Path Retreat G92	Original path retreat to G92 position
Restart (Re-cut)	Restart	【Auto2】→「Restart」

Property of Kent USA
Do Not Reproduce

Retreat Block (Machining)	Retreat Block	If there are some errors occur during machining (short circuit, unable to thread, etc.), please trace to the last block by pressing "Retreat Block". The machine will retreat a single block, every time you press the button. The system will also record the latest point as a hold point at this time.
Feed Block (Machining)	Feed Block	When Retreat Block process is done, press Feed Block to go forward. The machine will go forward a single block, every time you press the button. The system will also record the latest point as a hold point at this time.
Retreat Distance (Machining)	Retreat Distance	If there are some errors occur during machining (short circuit, unable to thread, etc.), trace original path away from the workpiece is required. However the retreat distance needs to be set. Each time you press the「Retreat Distance」button, the machine will retreat a single unit. The system will also record the latest point as a hold point.
Org. Path Retreat G92 (Machining)	Org. Path Retreat G92	When operating Org. Path Retreat G92 function, the machine will trace to the nearest G92and then record it as a hold point.
Move to Break point	Move to Brk. pt.	When the machining is paused，the machine will move to the break point. The break point is defined based on Feed Block 、 Retreat Distance 、Org. Path Retreat G92
Clear total cutting time(Under displacement or machining mode)	Clear Total Cutitng Time	Select the button, a conformational message will appear. Click OK to set zero the working time, click Cancel to cancel.
Start point(Under displacement mode)	Start Point	This function has the same operational method as【Auto 2】→「S.Pt Retn」. Please refer to「S.Pt Retn」operational method.
Break point(Under displacement mode)	Break Point	This function has the same operational method as【Auto 2】→「H.Pt Retn」. Please refer to「H.Pt Retn」operational method.

Property of Kent USA
Do Not Reproduce

Re-positioning or Cutting (Re-cut)	Re Positioning or Cutting	This function is used when cutting multiple molds in the same workpiece.

Reset EDM Data：

1. To run the function, please return to start point or trace to the reference point and move the machine to the start point and restart the previous process.
2. After starting a new program, press Reset EDM Data after the simulation. The displayed screen is shown below.

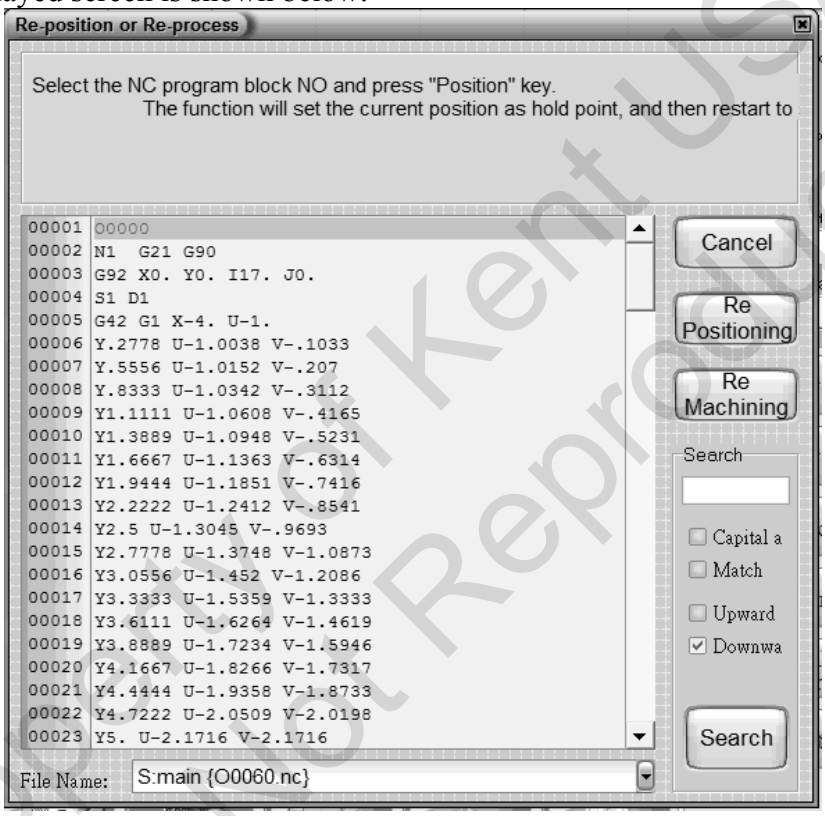

3. Check the NC Program, utilize the search function to find the assign Program.
4. Press Re- position, the machine will move to the setup position and the cutting process will restart.
5. Turn on《Water》、《Wire》、《EDM》、《Start》under【Auto1】, machine will start cutting automatically

   ※ Before pressing Re- position, please check will upper/lower machine head hit the workpiece or not.

1.4 KeyPad

The rest of the functions are as same as the ones on the KeyPad.

Property of Kent USA
Do Not Reproduce

IV. Basic Operation

Property of Kent USA
Do Not Reproduce

1 Tools

Following tools are used often while operating WEDM. Please place the tool near to the table or place where operator can reach the tool easily.

（1）Allen Wrench

Sized from M3 to M8. It is used to fasten screws in order to hold workpiece, or to adjust upper/lower machine head.

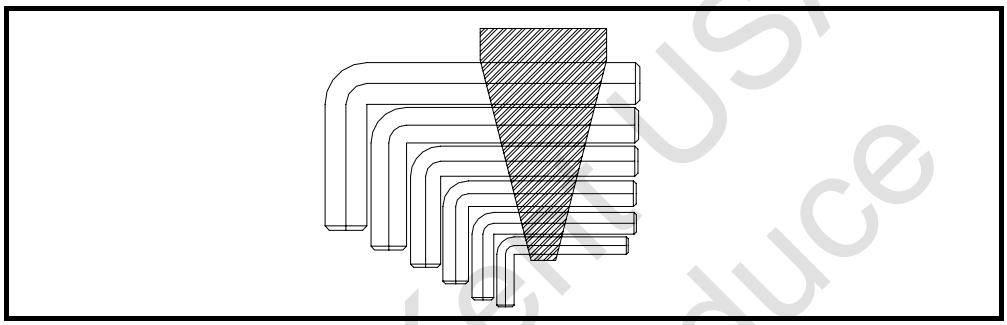

（2）Blade Feeler Gauge (0.1mm and 0.2mm) is used to measure the distance between workpiece and flush cup.

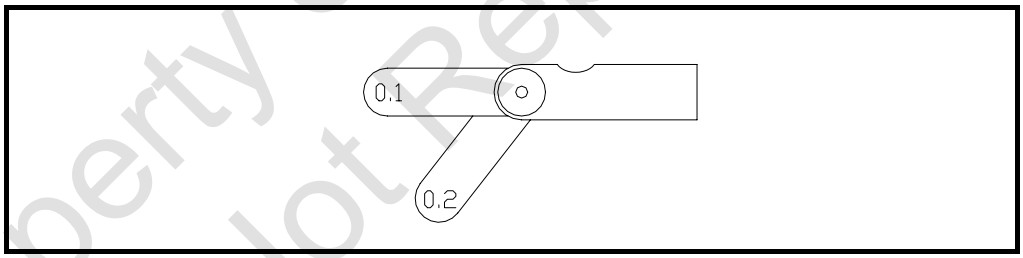

（3）Gage Meter for Power Contactor

This meter is used to measure the position of power contactor.

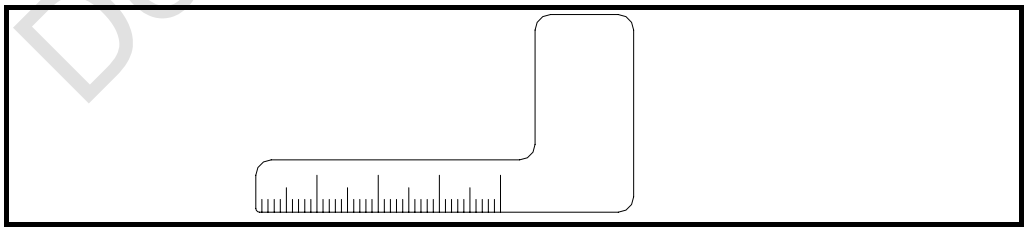

Property of Kent USA
Do Not Reproduce

（4）Boride Engineering Abrasive

It is used to remove the bur on the edge of workpiece and the debris on the table.

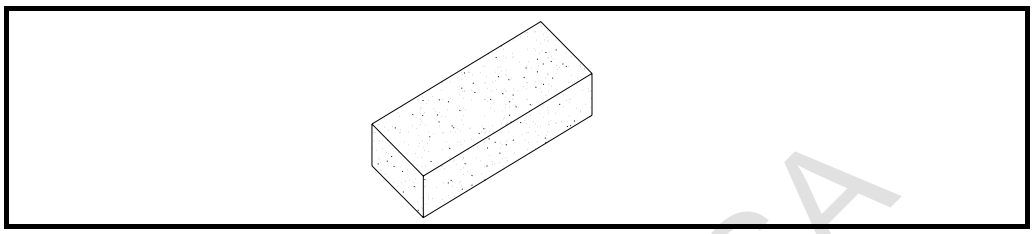

（5）Lighter（Abandon the lighter when the fuel is empty）

Lighter is used to heat the copper wire for straighten or burn off.

Make sure there is enough fuel inside the lighter to process your work.

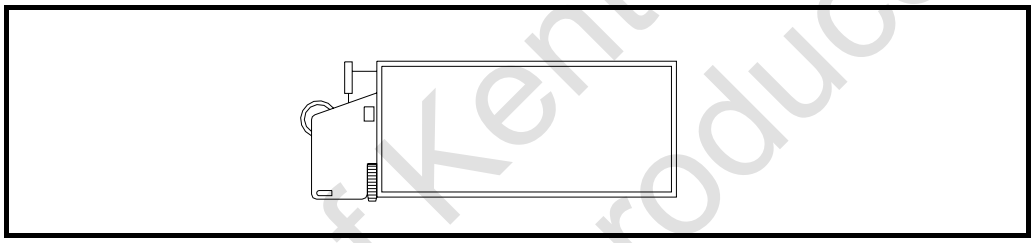

（6）10mm Wrench or small adjustable wrench.

It is used to check or change wire guide.

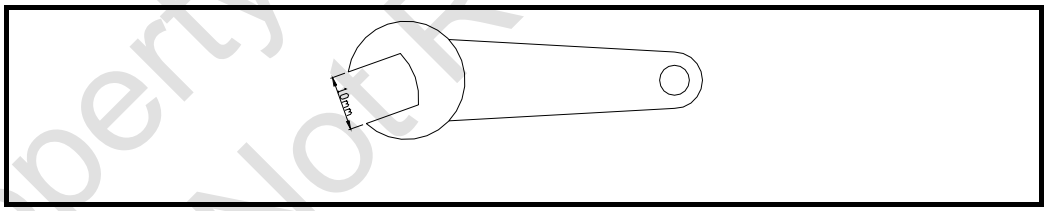

（7）30mmWrench or large adjustable wrench.

It is used to change filters.

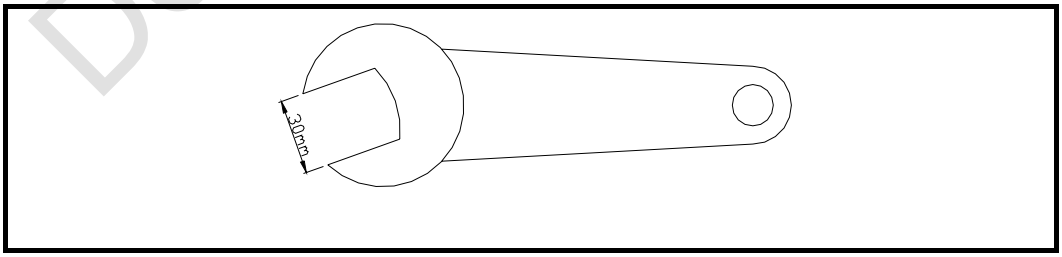

Property of Kent USA
Do Not Reproduce

Following measure tools are very useful during operation.

（1）Test indicator（Unit 0.002mm）

Test indicator is used to level workpiece.

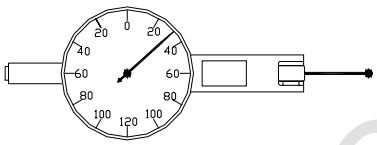

（2）Micrometer

Micrometer is used to measure the dimension of workpiece.

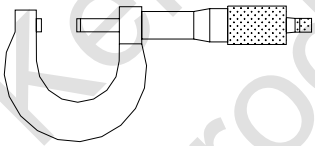

（3）Tension meter

Tension meter is used to measure wire tension.

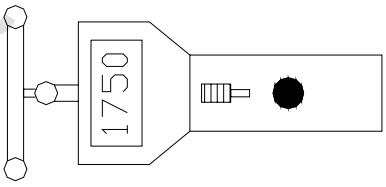

（4）Depth Micrometer

Depth Micrometer is used to measure the height of lower machine head during Taper Cutting

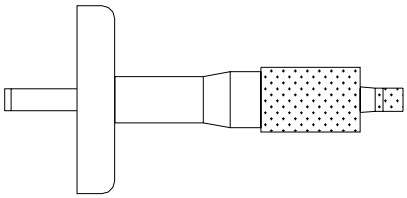

Property of Kent USA
Do Not Reproduce

2 Operating Procedure

Power On	——————→	Turn Power Switch→Press《ON》→Release Emergency Button when the screen appears.
↓		
Origin Return	——————→	Under【Manual】mode →Choose selected axis→Select【Origin Return】,the machine will start to process 。
↓		
Manual Movement	——————→	Press the button on control panel, moving alone axis.
↓		
Check power Contactor and Flush head	——————→	Check upper and lower power contactors and Flush head.
↓		
Install Cutting Wire and Workpiece	——————→	Install Cutting wire on rollers, and install workpiece on work table. Level worpiece.
↓		
Input Program	——————→	Input program，EX：From Flash drive or NET WORK。
↓		
Parameters Setting	——————→	Input parameters base on the workpiece and working circumstance.
↓		
Graph Simulation	——————→	Check the program and do graph simulate.
↓		
Select Sparking Condition	—————→	Select the suitable Sparking Condition form computer.
↓		
Adjust location of cutting wire	——————→	Adjust the wire position base on the installed workpiece.
↓		
Preparation before EDMing	——————→	Check the gap between flush head and workpiece and the wire inside storage box.
↓		
Start machining	——————→	Switch to【Machining】Mode，Press《START》to start machining。
↓		
End Machining	——————→	Remove workpiece when machining is complete.
↓		
Check workpiece	——————→	Check the result.
↓		
Machine cleaning	——————→	Clean all the components from the machine.
↓		
Power Off	——————→	Power Off when the mission is done.

Property of Kent USA
Do Not Reproduce

3 Connect Power

（1）Turn the Main Power switch to ON position.

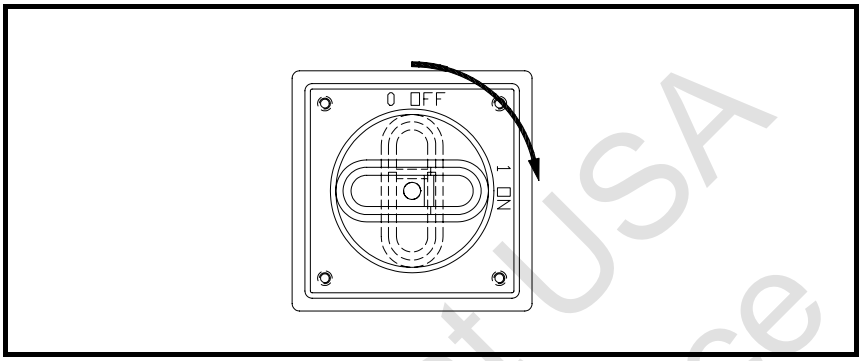

（2）Push the green《ON》button on the right side of panel.

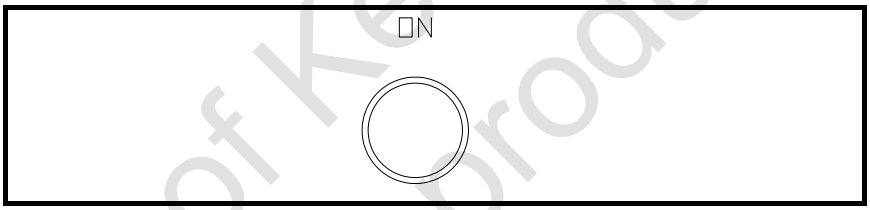

System Screen will be appeared after 30 seconds.

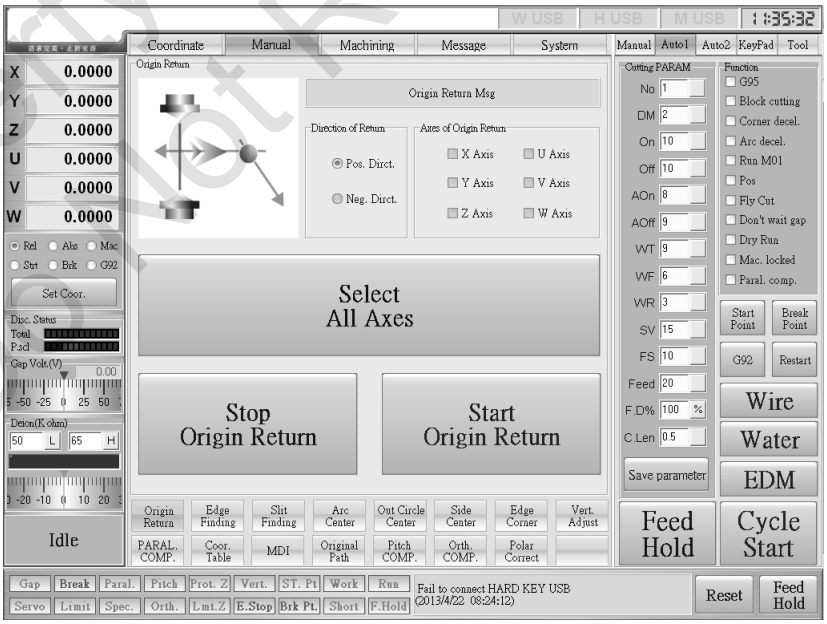

Property of Kent USA
Do Not Reproduce

（3）Release the《EMGY STOP》switch on the right side of panel to start operation.

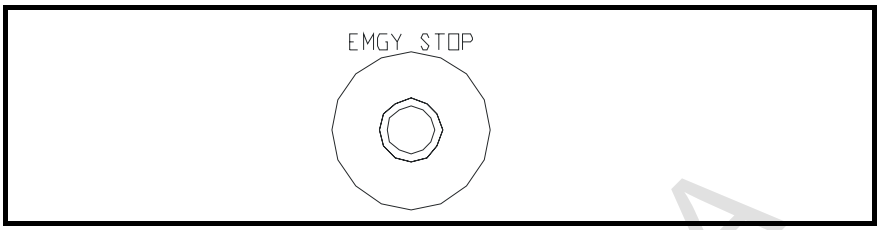

! Note

《EMGY STOP》: Machine is under(NOT_READY) status if《EMGY STOP》is pulled. After the《EMGY STOP》button is pressed, machine can operate normally.

Property of Kent USA
Do Not Reproduce

4 Homing

After machine is assembled, engineer has to do the laser alignment to the back slash of ball screw. The laser alignment is base on the machine's reference point. After the alignment, the compensation value is input in the controller. When machine is start, it is under none compensate status. Homing procedure has to be done to active compensation value.

Procedures are shown as below:

（1）Select「Origin Return」under the【Manual】.

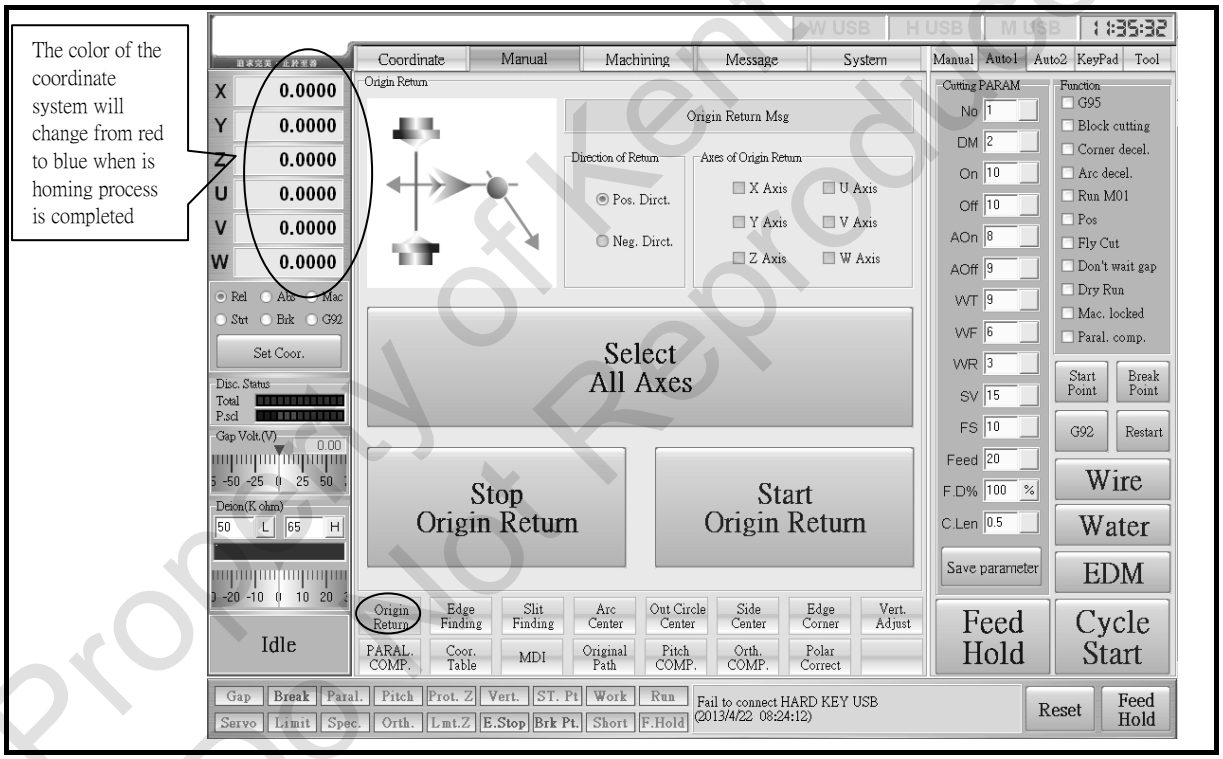

（4）Press《X》、《Y》、《Z》、《U》、《V》、《W》to start Origin Return.

Property of Kent USA
Do Not Reproduce

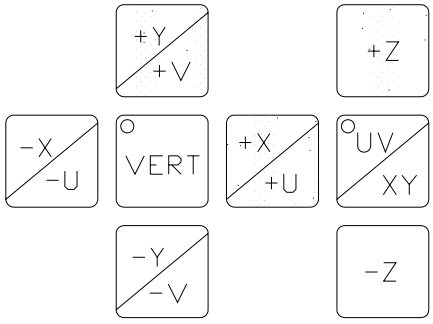

! Note

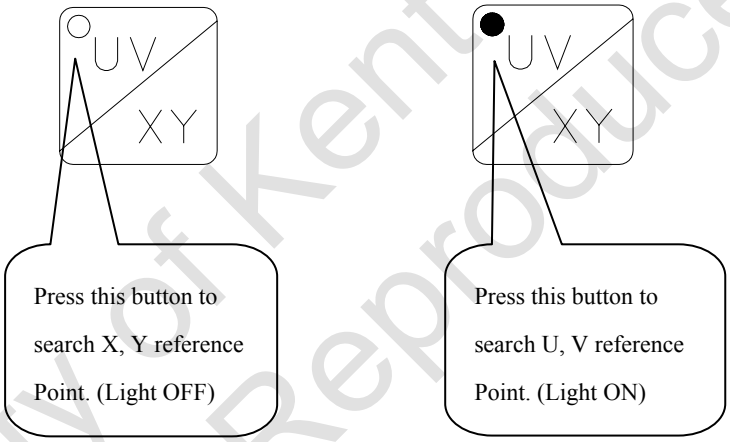

✐ Hint

Machine can find the single axis reference point, or 5 axes reference points simultaneously. The best way to find the reference point is to find U、V axes reference point first, then press《VERT》key and return U, V axes back to vertical position. After U, V axis is completed; find the reference point of X, Y, Z axes.

Property of Kent USA
Do Not Reproduce

5 Movement

Use any of the three methods below to move X、Y、Z、U、V axes.

① Use the hand controller to move to the designated location。
② Press the "moving key button" under [Manual]
③Press "Go Pos." under [Manual] to move the axes to the designated position.

5.1 Continually Hand Move

（1）Press《JOG》Button

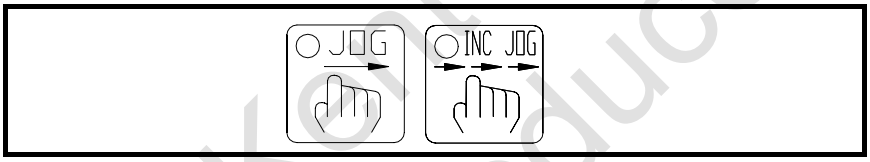

《JOG》

（2）Select moving speed

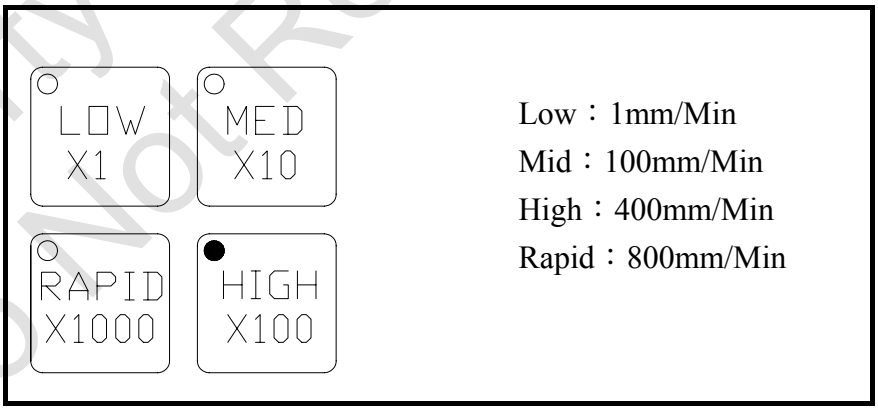

Low：1mm/Min
Mid：100mm/Min
High：400mm/Min
Rapid：800mm/Min

Example：《HIGH×100》

Property of Kent USA
Do Not Reproduce

（3）Direction Key

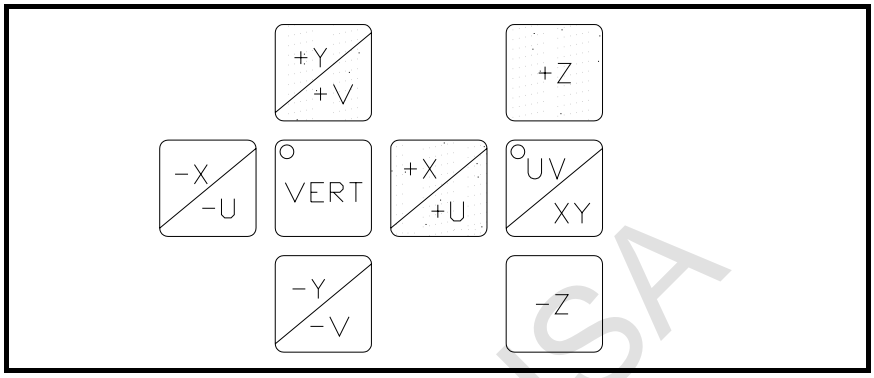

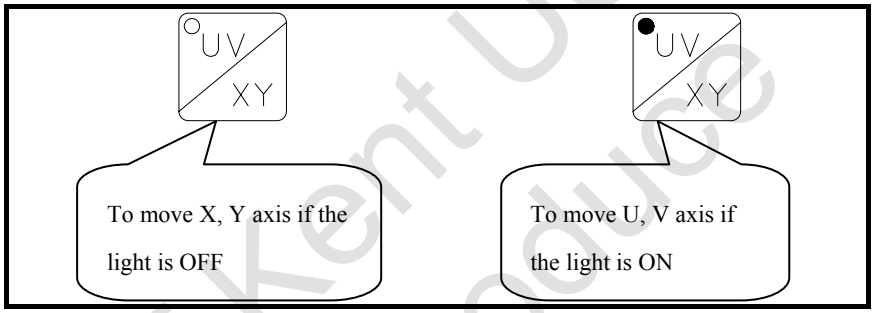

5.2 Jog in certain distance

（1）Press《INC_JOG》button

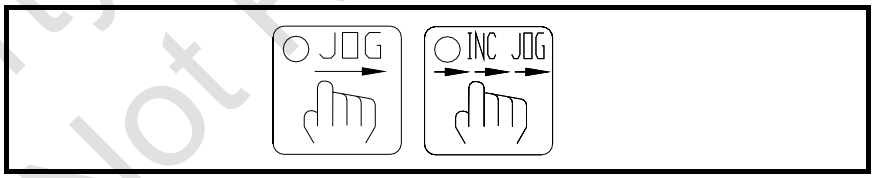

《INC_JOG》

（2）Select Jog distance.

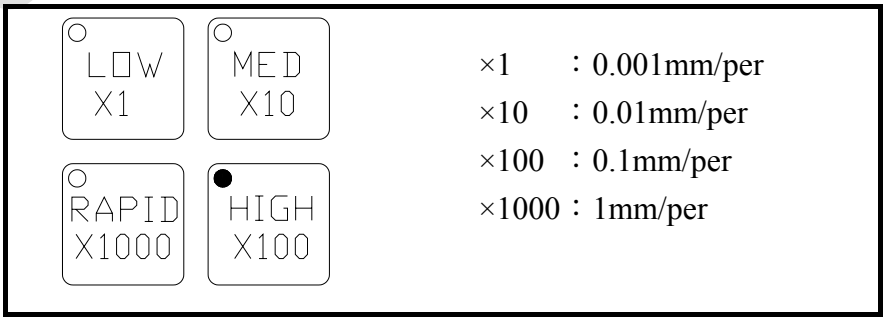

×1 ：0.001mm/per
×10 ：0.01mm/per
×100 ：0.1mm/per
×1000：1mm/per

EX:《HIGH×100》button, jog distance is 0.1mm per press

Property of Kent USA
Do Not Reproduce

（3）Direction Key

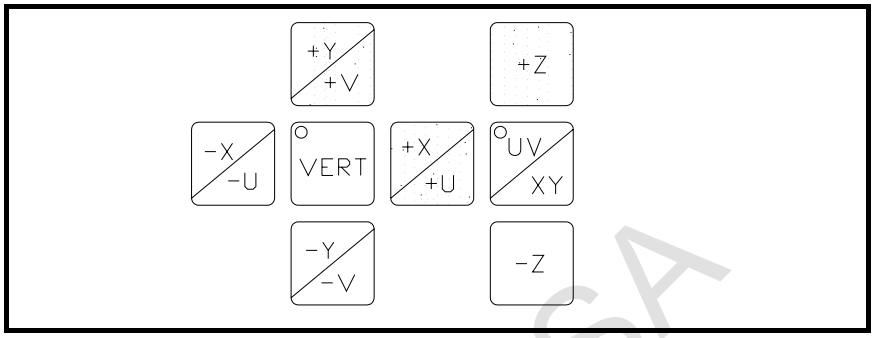

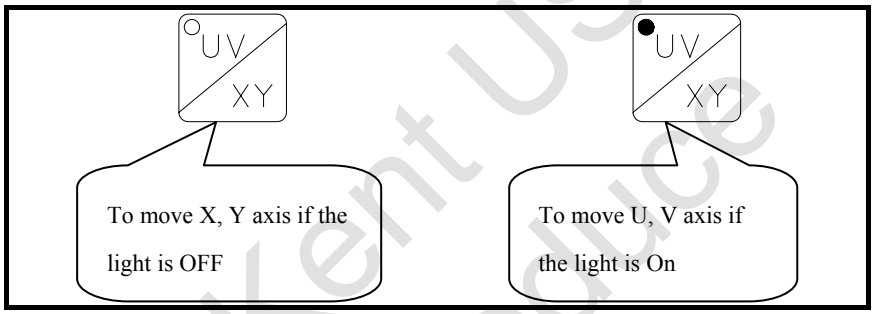

5.3 Move cutting wire back to vertical position

When upper machine head is moving alone U or V axis, cutting wire is not in vertical position anymore. Press《VERT》button to move wire back to vertical position.

（1）To move the machine head alone U or V axis please operate under JOG or INC JOG mode.

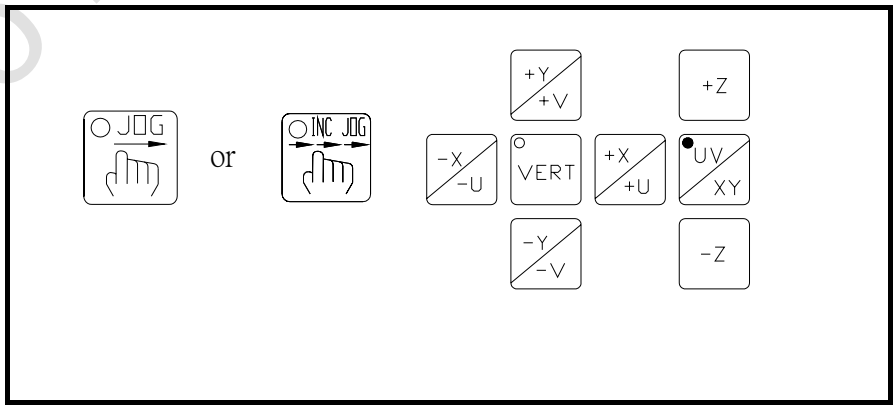

《JOG》or《INC_JOG》
《＋U》or《－U》or《＋V》or《－V》

Property of Kent USA
Do Not Reproduce

（2）Press 《VERT》button to move cutting wire back to vertical position.

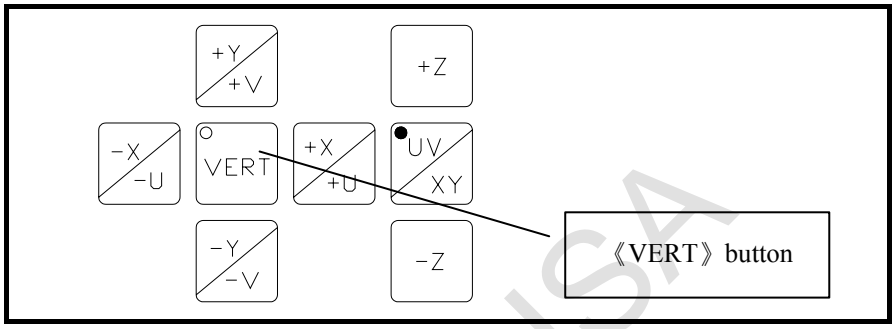

《VERT》

✎ Hint

Please refer to section 5, Chapter 1 for Vertical Position setup.

5.4 Motorized Z axis movement

Press the direction key to move the machine head alone Z axis. Machine head is moving alone under JOG or INC- JOG mode.

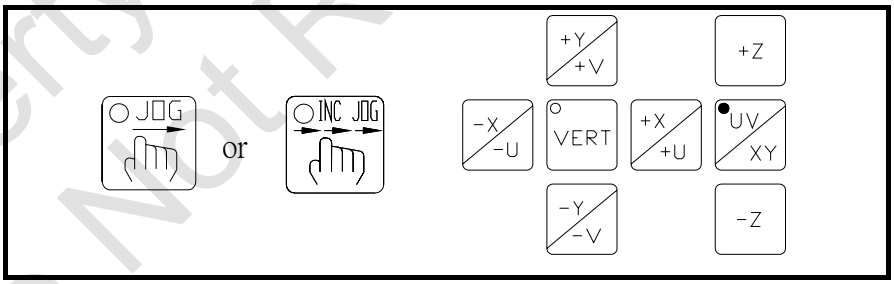

《JOG》or《INC_JOG》
《－Z》or《＋Z》

Property of Kent USA
Do Not Reproduce

5.5 (MPG) Coordinate GOTO

（1）Press《MPG》，light will appear when the function is on.

（2）MPG only allows one axis to move each time. Press 《+X》, 《+Y》, 《+Z》, 《+U》, 《+V》 to move each axis, lights will appear when the functions start.

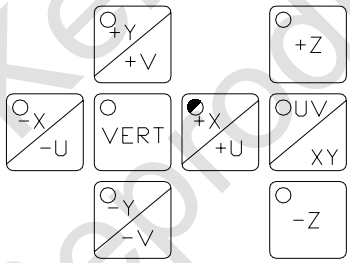

（3）When turning MPG axis, clockwise represent position direction and counter clockwise stands for negative direction. LCD Monitor can help you move the coordinate position accurately.

Property of Kent USA
Do Not Reproduce

6 Check Power Feed Contactor and Flush Head

Check power feed contactor and flush head before machining.

6.1 Check Power feed Contactor

Power feed Contactor provides voltage on cutting wire.

Wear and tear on Power feed Contactor might damage the wire.

6.1.1 Check upper Power Feed Contactor

（1）Remove the fastening screw on upper machine head.

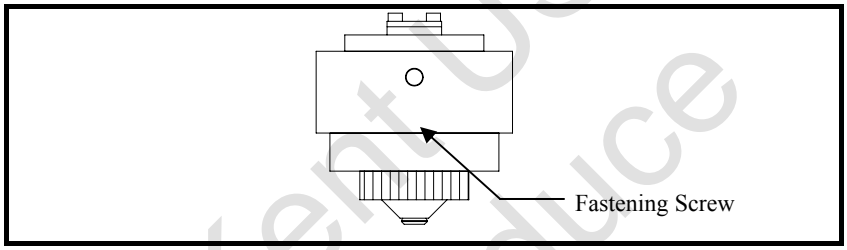

（2）Insert a small hexagon wrench and push out the Power feed Contactor. The L- Shaped small ruler can be used to remove the contactor too.

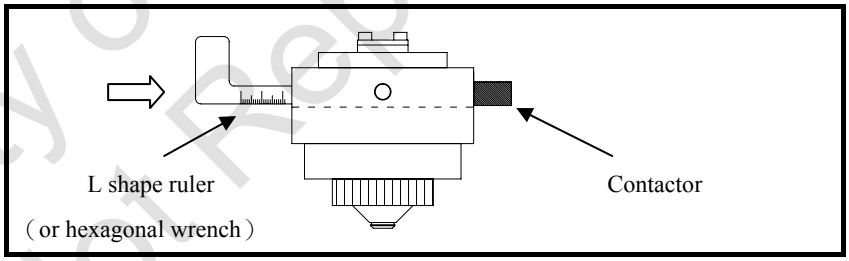

（3）Check Power feed Contactor

Is there any wear mark or dirt on the surface of power contactor.

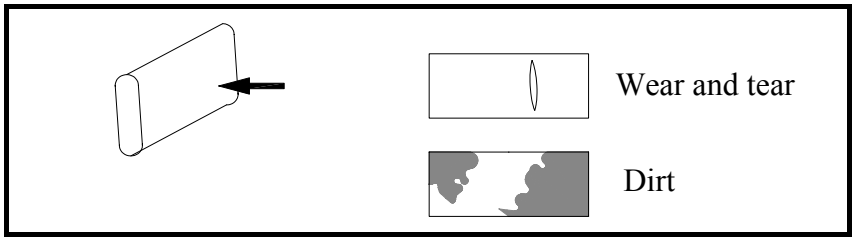

Clean the contactor with detergent.

Make sure there is no dirt on the surface of contactor.

Property of Kent USA
Do Not Reproduce

✐ Hint

1. If the wear mark is too deep and effecting the machining efficiency, use the L-shape ruler and push the contactor in a little bit(2.5mm)
2. If there are lots of wear marks, please replace the power contactor.

（4）Use the L-shape Ruler to install power contactor.

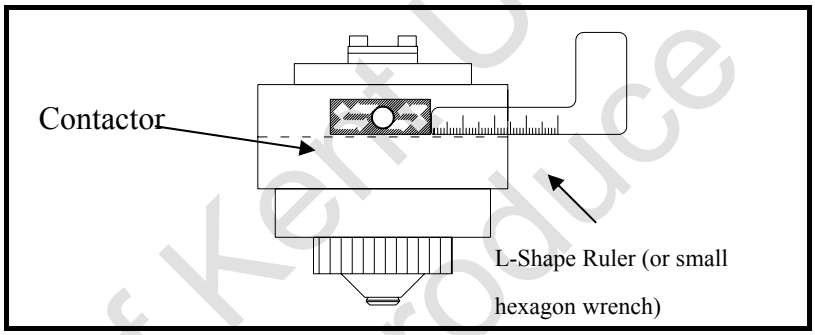

! Note

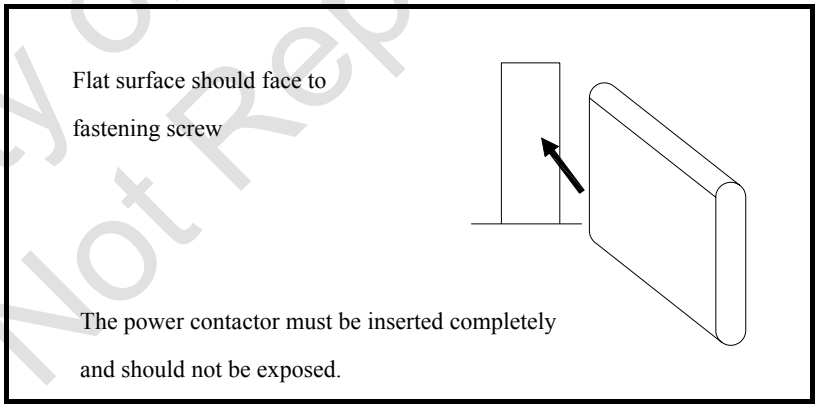

（5）Tighten the fastening screw

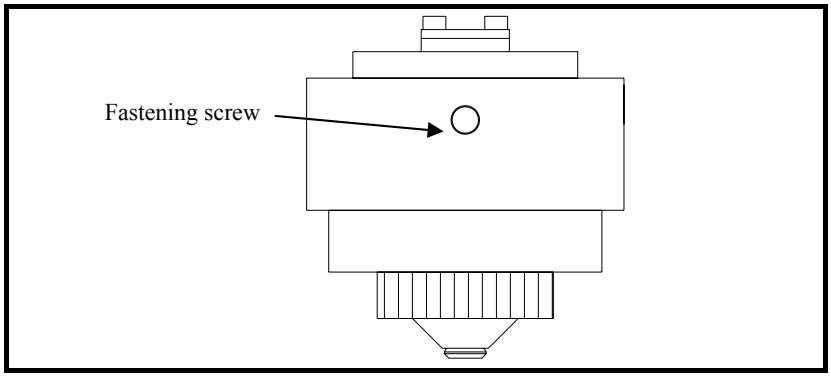

Property of Kent USA
Do Not Reproduce

6.1.2 Check Lower Power Feed Contactor

（1）Remove the fastening screw on lower Machine head.

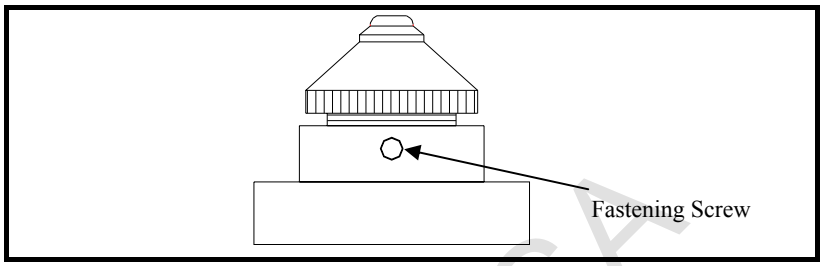

（2）Insert a small hexagon wrench and push out the Power feed Contactor. The L-Shaped small ruler can be used to remove the contactor too.

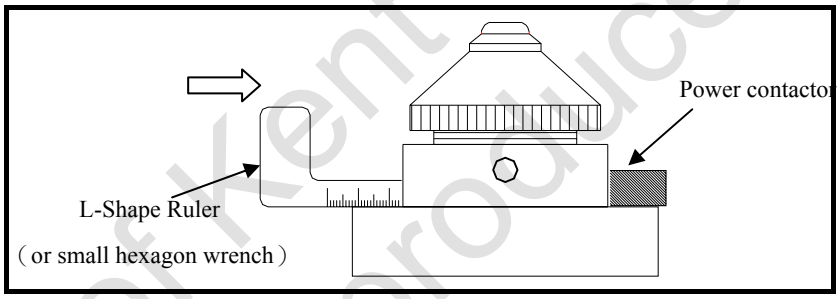

（3）Check Power feed Contactor

Is there any wear mark or dirt on the surface of power contactor?

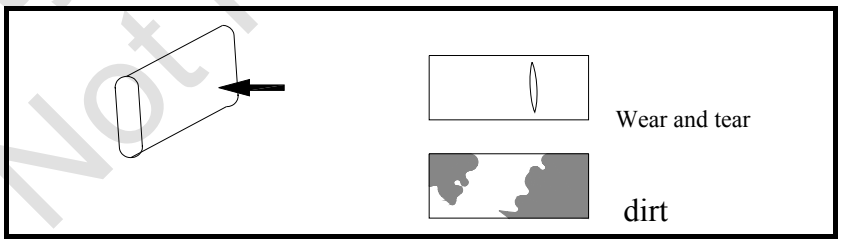

Clean the contactor with detergent.

Make sure there is no dirt on the surface of contactor.

✐ Hint

If there are lots of wear marks, please replace the power contactor

Property of Kent USA
Do Not Reproduce

.

（4）Use the L-shape Ruler to install power contactor.

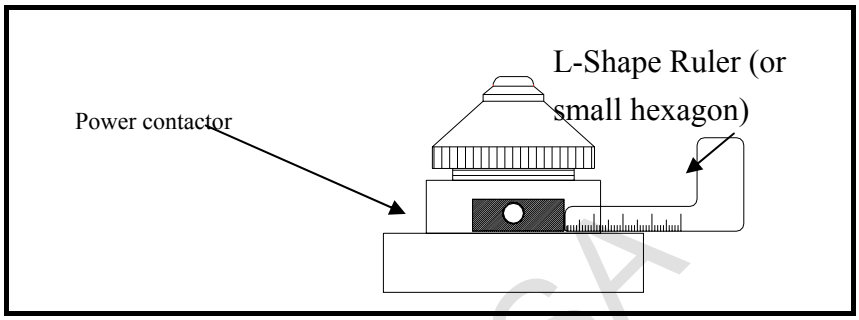

! Note

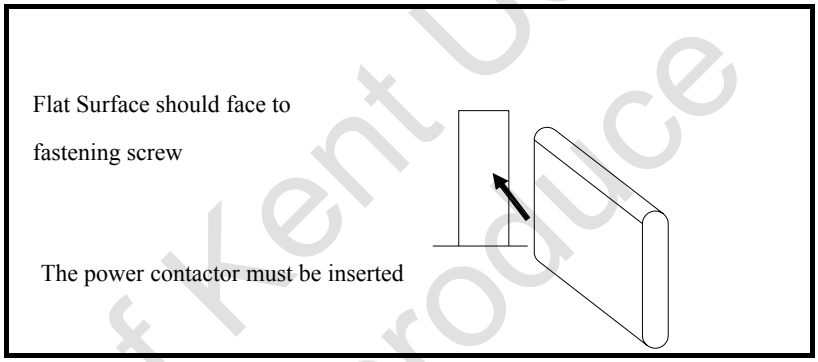

（5）Tighten the fastening screw

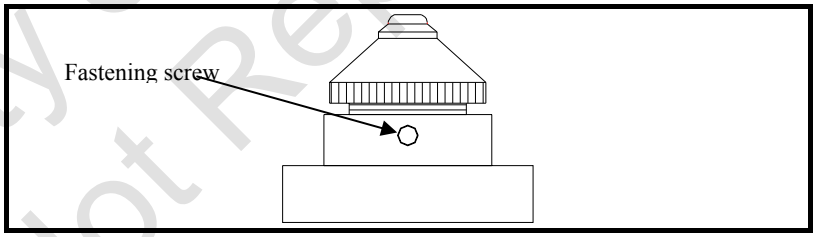

Property of Kent USA
Do Not Reproduce

6.2 Check Flush Nozzle

The broken or scratched Flush Cup will case the working fluid flushes not consistence and reduce the cutting speed.

6.2.1 Check Lower flush Cup

（1）Turn the flush nozzle clockwise and open it.

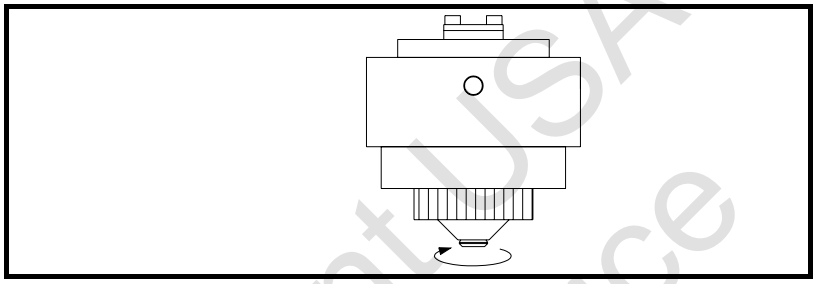

（2）Check Flush Cup

If there is just a small scratch, grind it with Boride Engineering Abrasive

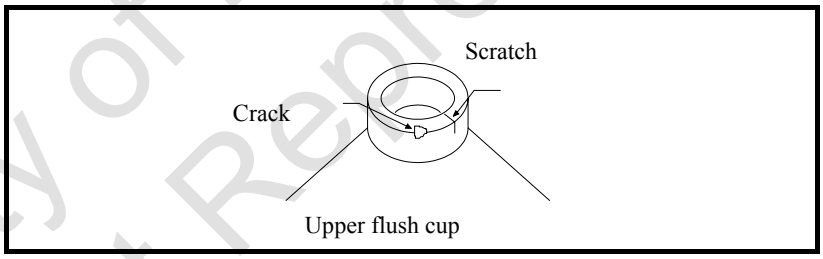

✎ Hint

※ Suitable lower Flush Cup

Standard flush cup：WA58

Cone head flush cup：WA81

（3）Install Flush Cup

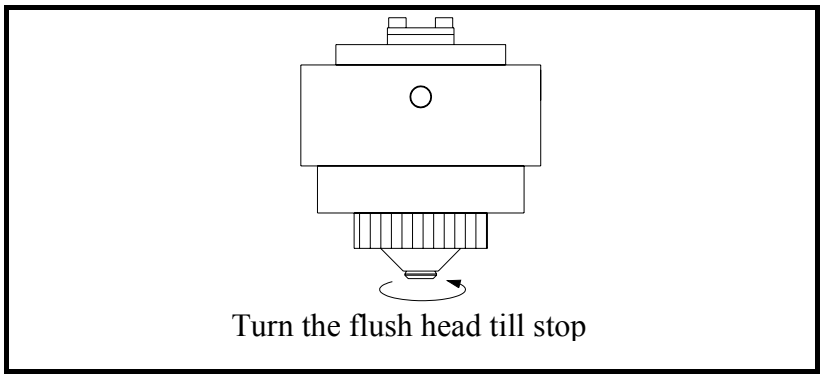

Property of Kent USA
Do Not Reproduce

! Note

Turn the flush head by hand

Do not use wrench or other tool to turn Flush Cup, otherwise it Might damaged the upper machine head.

6.2.2 Check Upper Flush Cup

（1）Remove Upper Flush Cup by turning

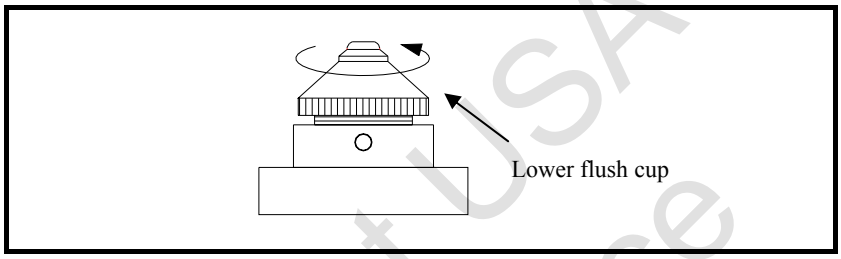

（2）Check upper Flush Cup. If there is just a small scratch, grind it with millstone/abrasive.

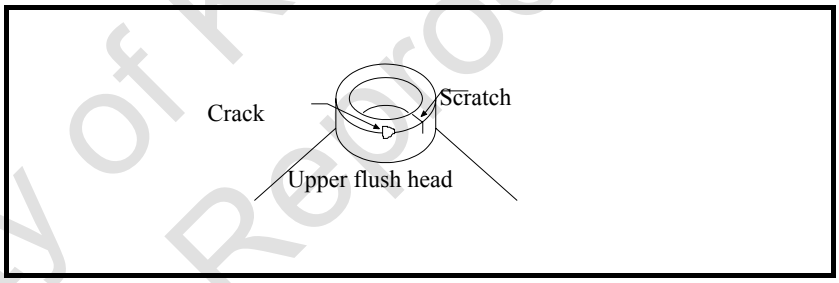

Replace a new flush cup if there is scratch or crack after the grinding.

✐ Hint

※ Suitable upper Flush Cup

Standard upper Flush Cup：WA42

Taper upper Flush Cup：WA87

（3）Use Teflon to seal the base of guide (screw parts)

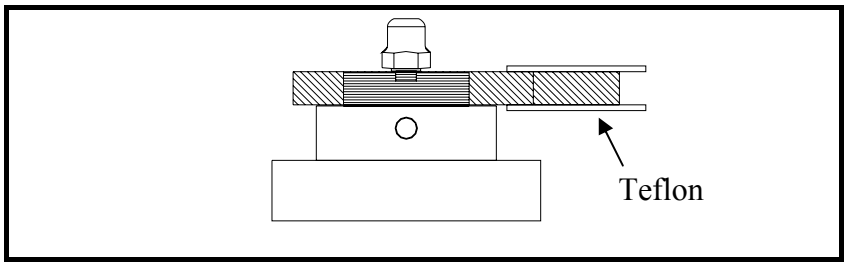

! Note

Don’t seal the upper screw parts of guide.
If the tape is not used to seal the guide, it will cause the flush cut vibrate and the water pressure is not stable.

Property of Kent USA
Do Not Reproduce

（4）Install upper Flush Cup by turning.

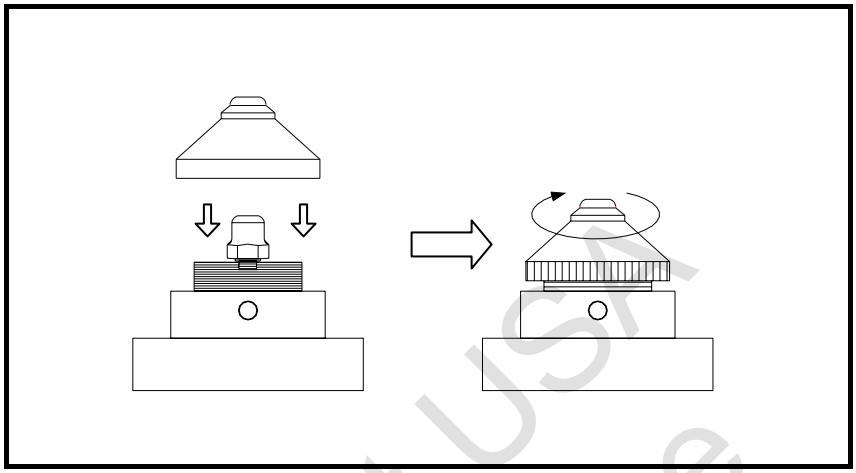

! Note

Install the flush head by head.
Other tools, such as wrench, might damage the parts.

Property of Kent USA
Do Not Reproduce

7 Cutting Wire and Workpiece Installation

7.1 Wire Selection

Cutting wire recommended.

Table 7.1 Cutting Wire recommended

Application	Furkawa Electric Co., Ltd	Hitachi Cable., Ltd
Standard	FKH （Hard Wire） FKA （Soft Wire）	HBZ－B （Hard Wire） ABZ－B （Soft Wire）
Large taper cutting		ABZ－T （Ultra Soft Wire）
AWF	FKH （Hard Wire）	HBZ－U （Hard Wire）
Prevent Stock	－	HTF （Hard Wire） ATF （Soft Wire）

Select suitable cutting wire, especially for taper cutting.

＊Taper = 3° ：
Furkawa's FKH、Hitachi's HBZ－B

＊Taper > 3° and < 10°：
Furkawa's FKA、Hitachi's ABZ－B

＊Taper > 10° ：
Hitachi's HTF（Taper < 3°），ATF（Taper > 10°）。

7.2 NOTE!

Cutting Wire is very brittle. Please handle with care, otherwise it might damage or break the wire and cause the machining unstable.

＊If the wire put in the box too long, it will make the wire curly.

＊Take out the wire from the box with hand, do not drop it to the floor.

＊Don't open the PVC packing before using the wire, otherwise the wire will be rusted.

Property of Kent USA
Do Not Reproduce

＊Hold the tip of wire and pull it. Cutting Wire cannot be pulled out if it is curly.

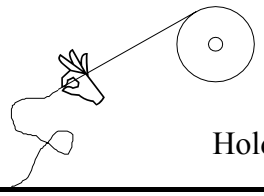

＊Pull the wire slowly to prevent it twisted.

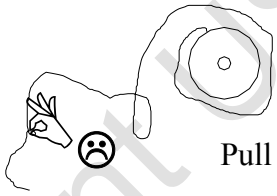

＊Pull 10cm of wire out and break the wire with lighter fire。It will sharpen the tip of the wire and make the wire threading easier.

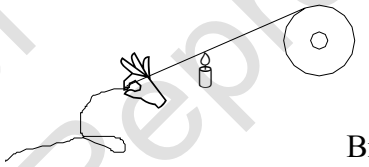

＊The end of wire is tapped on the core. If the wire keep feeding, upper machine head be stuck by the tap.

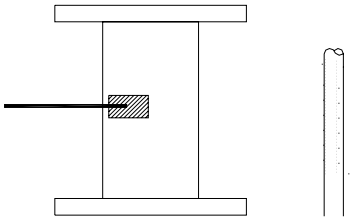

If the wire keeps feeding,
upper machine head
might be stuck by the tap.

Property of Kent USA
Do Not Reproduce

7.3 Install cutting Wire

WB、WI Automatically Wire Threading System：

（1）Remove the Taper cap from wire support arm.

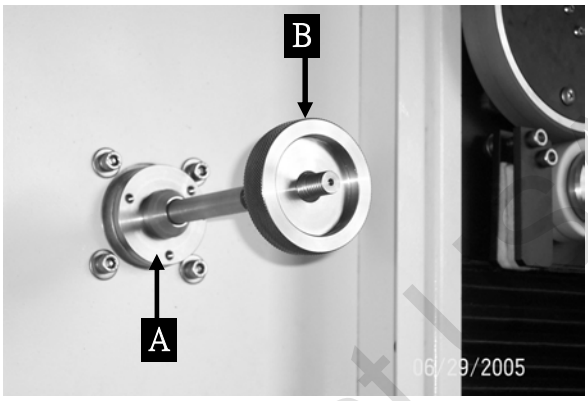

A：Core support arm

B：Taper Cap

（2）Put the wire on Core support arm

The wire spool's open side is on the left.

(Wire is rotate by clockwise direction)

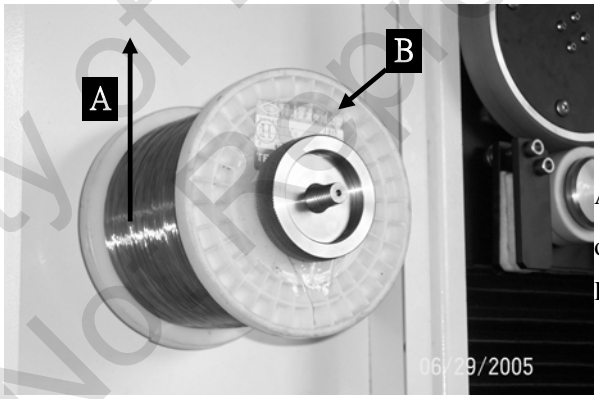

A：The open side is on the left.

B：Wire Spool

（3）Install the wire as follow

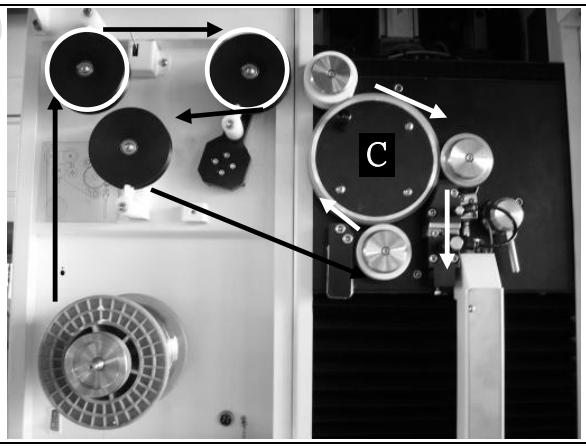

Roll the wire one more turn on C (Tension roller)

Property of Kent USA
Do Not Reproduce

（4）Pull the wire150~200 ㎜ and break with lighter fire.

（5）Push the handle ”C ” up (counter clockwise) and turn the tension roller clockwise and make the wire through point B and lead the wire into guide tube about 10 cm. Then push down the control handle C clockwise.

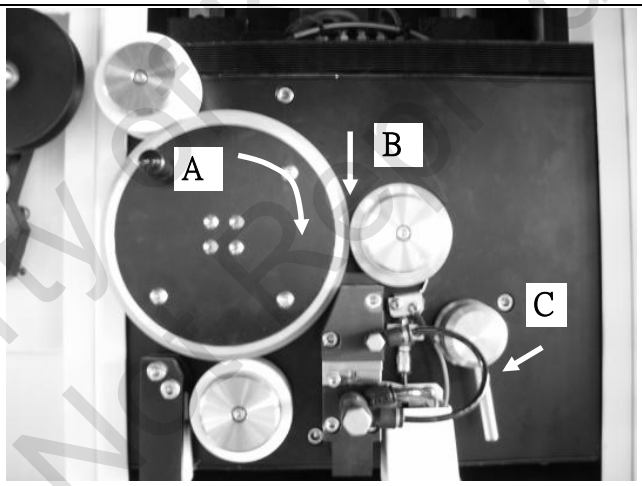

A：Tension Roller
B：Wire through here
C：Control Handle

（6）Press AUTO wire threading till action complete.

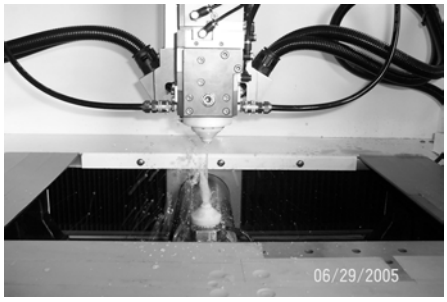

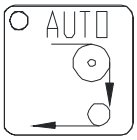

Property of Kent USA
Do Not Reproduce

Appendix 1: WB、WI Auto Wire Threading diagram

Feed the wire by the following steps: from（A）to（G）

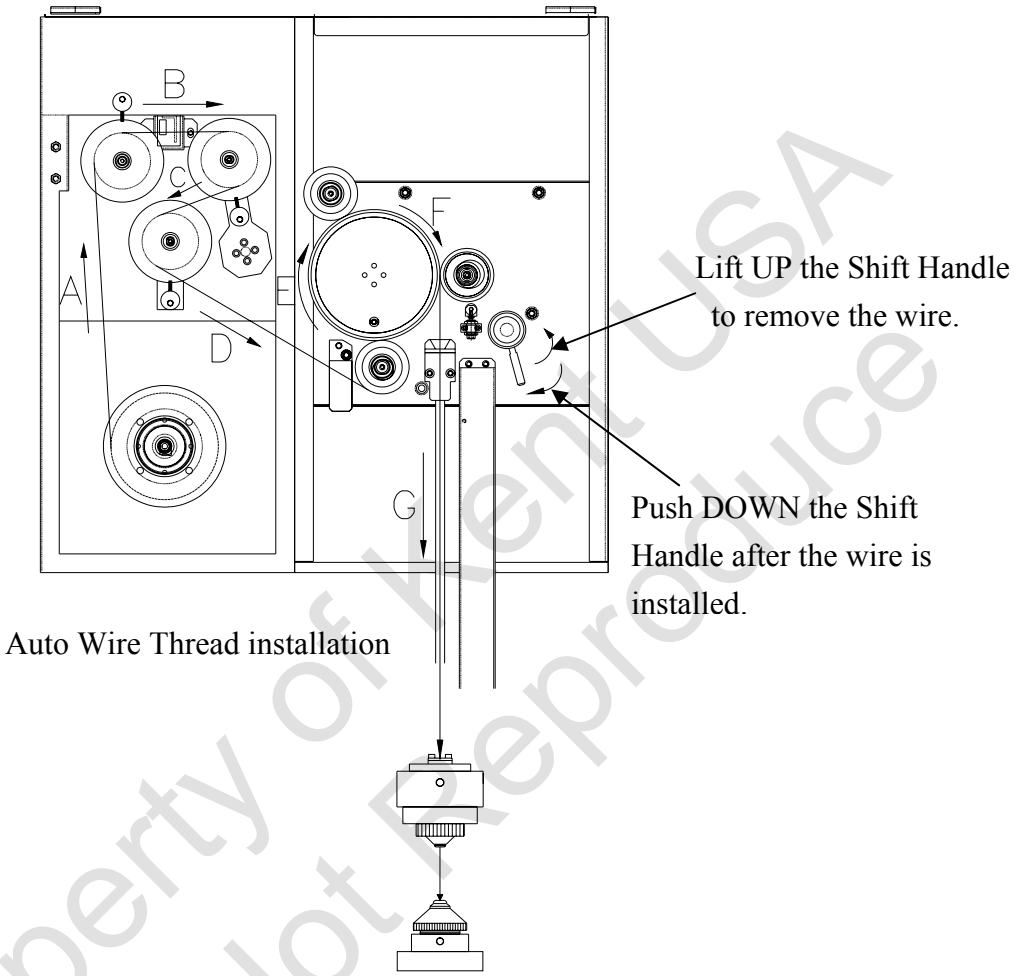

- ∗ Install the wire follow by the sequence of A to G
- ∗ Roll the wire 2 turns on（E）and（F）
- ∗ Below the (G) section, feed the wire via pushing AUTO Wiring button, flushing water or air.
- ∗ Be careful of the Shift Control Handle Position.

Property of Kent USA
Do Not Reproduce

Appendix 2：WB、WI series Auto Wire Threading diagram

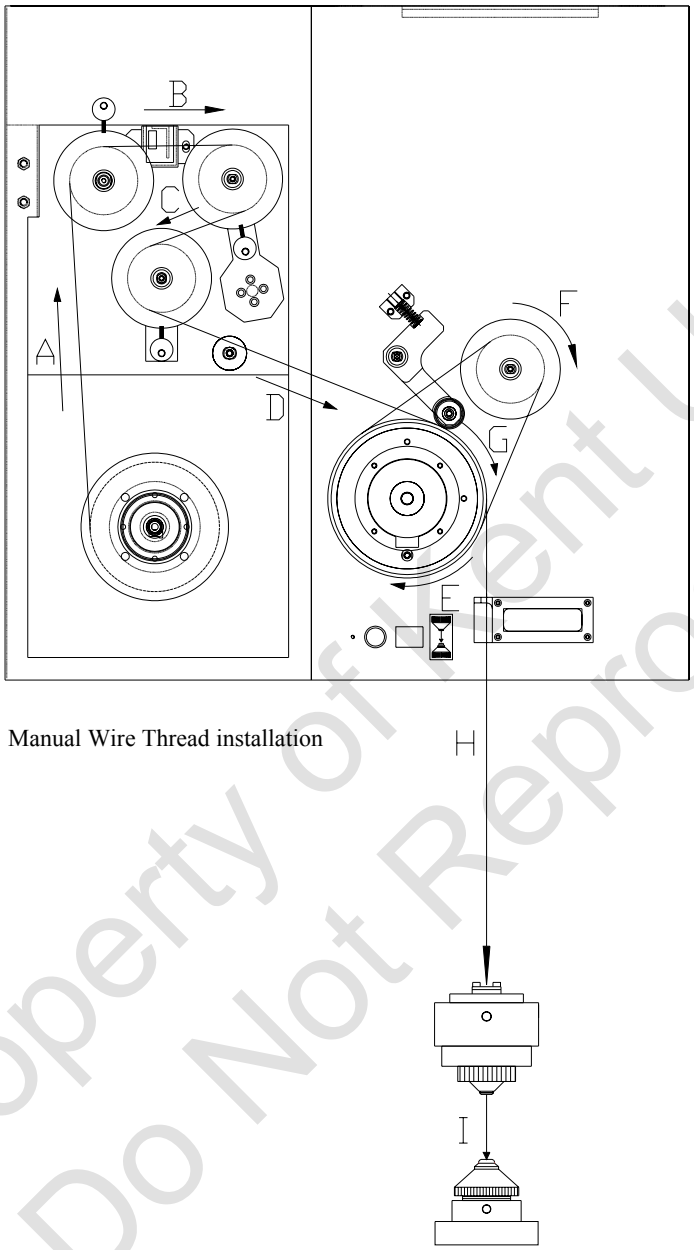

Manual Wire Thread installation

＊ Install the wire follow by the sequence of A to I

＊ After (I) section, press Manual Wire Threading Button to lead the wire via flushing. Press the button to stop it when wire is pulled.

＊ From (D) to (H), roll the wire from outside to inside to prevent wire overlap.

Property of Kent USA
Do Not Reproduce

Appendix 3：WA 、WI series Auto Wire Threading diagram

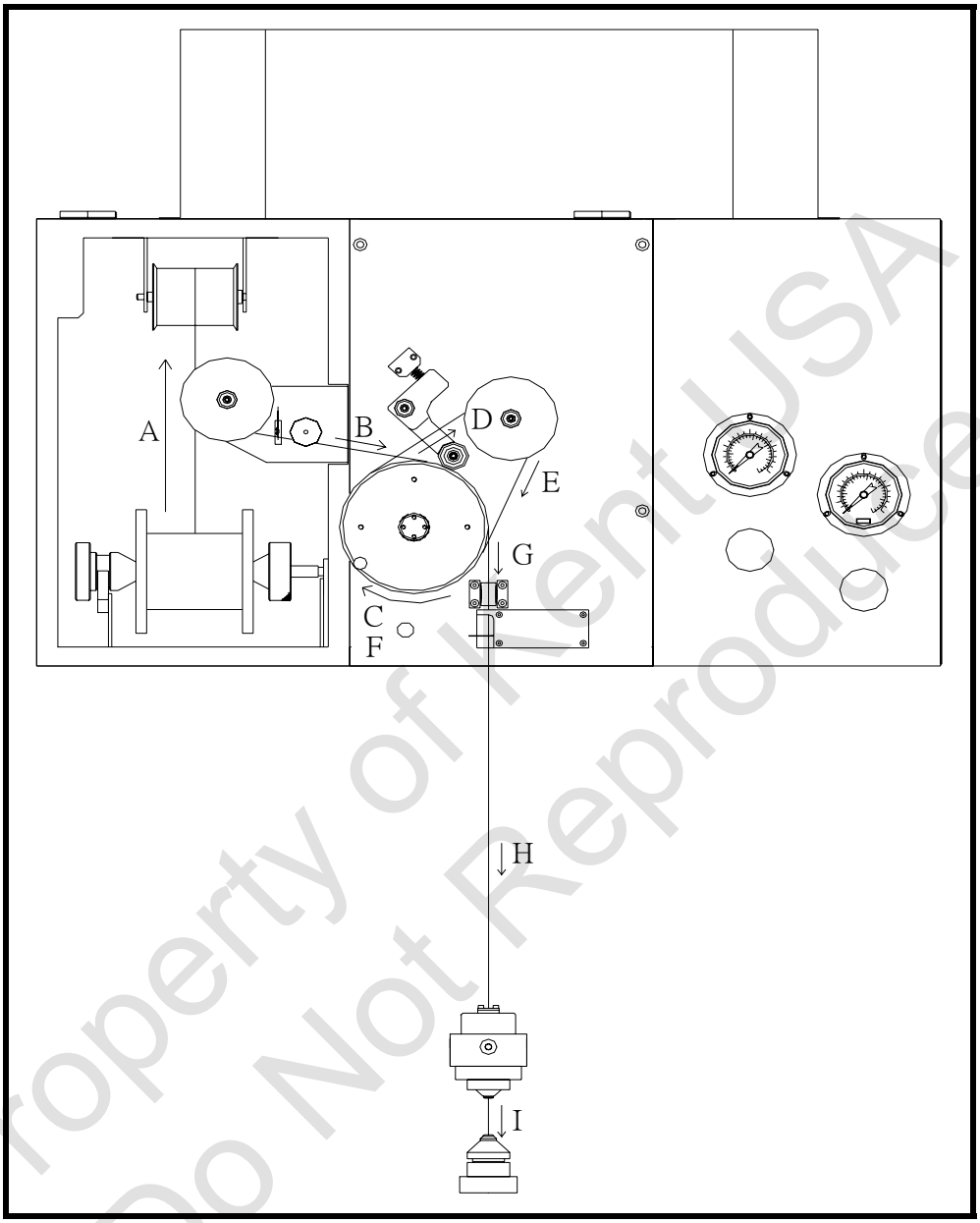

Property of Kent USA
Do Not Reproduce

- ∗ Install the wire follow by the sequence of A to I
- ∗ After (I) section, press Manual Wire Threading Button to lead the wire via flushing. Press the button to stop it when wire is pulled.
- ∗ From (D) to (H), roll the wire from outside to inside to prevent wire overlap.

7.4 400*300mm Work Table

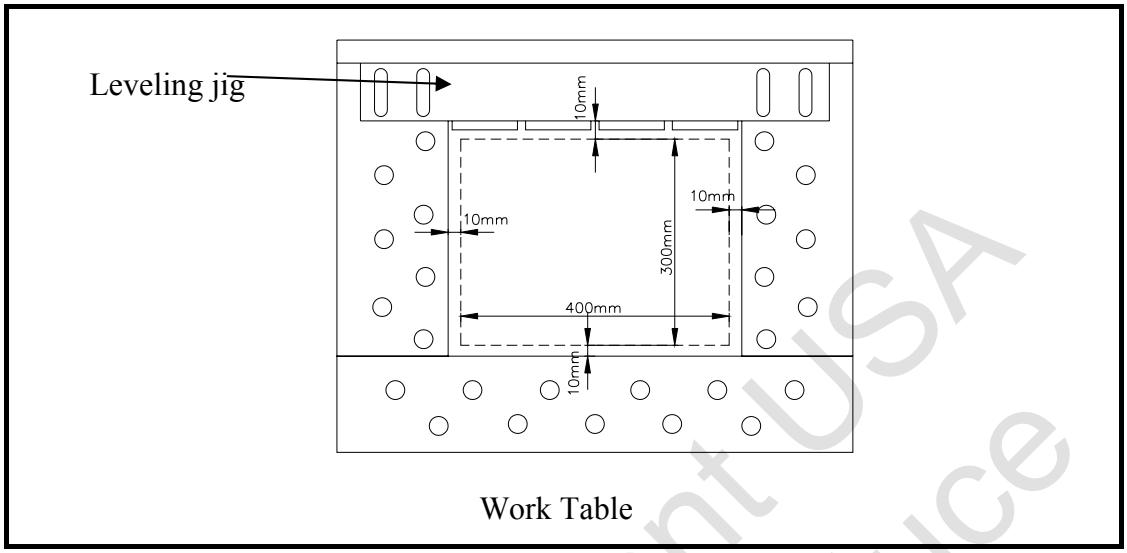

Figure 7.4 400*300mm work table and leveling Jig

As shown above, the maximum traveling range of working table is 400×300mm.

There are 2 rows of screw holes- outside and inside rows. Operation can put the Holding Jig or Leveling Jig base on the shape of workpiece.

Changing the Shape of the workpiece by adjusting Leveling Jig.

Fixed the Leveling Jig to the designated position by using inside/outside and ellipse screw holes

（1）Fasten the Level Jig by using outside screw holes.

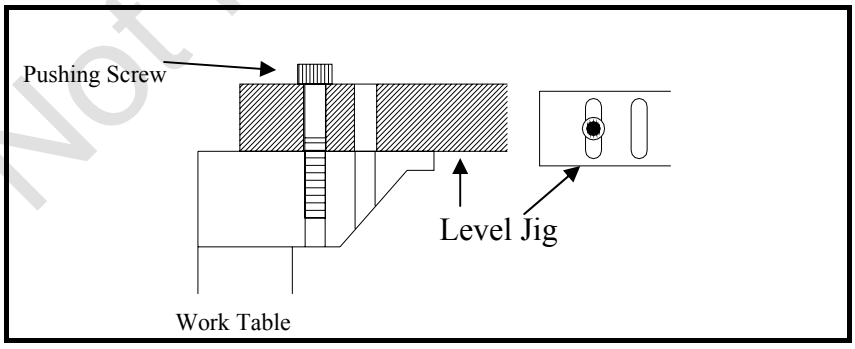

（2）Fasten the Level Jig by using inside screw holes.

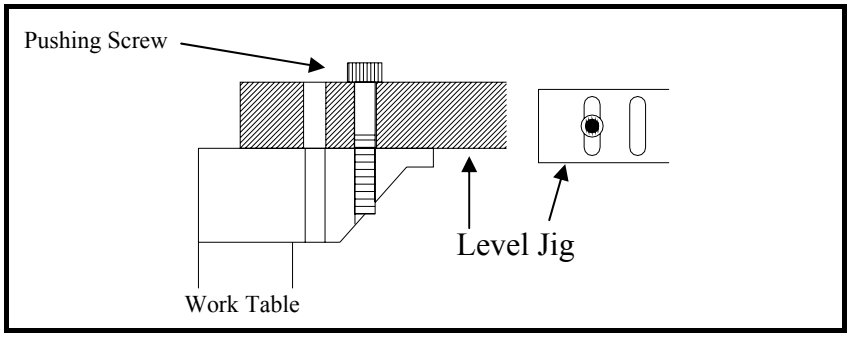

Property of Kent USA
Do Not Reproduce

7.5 600*450mmWork Table

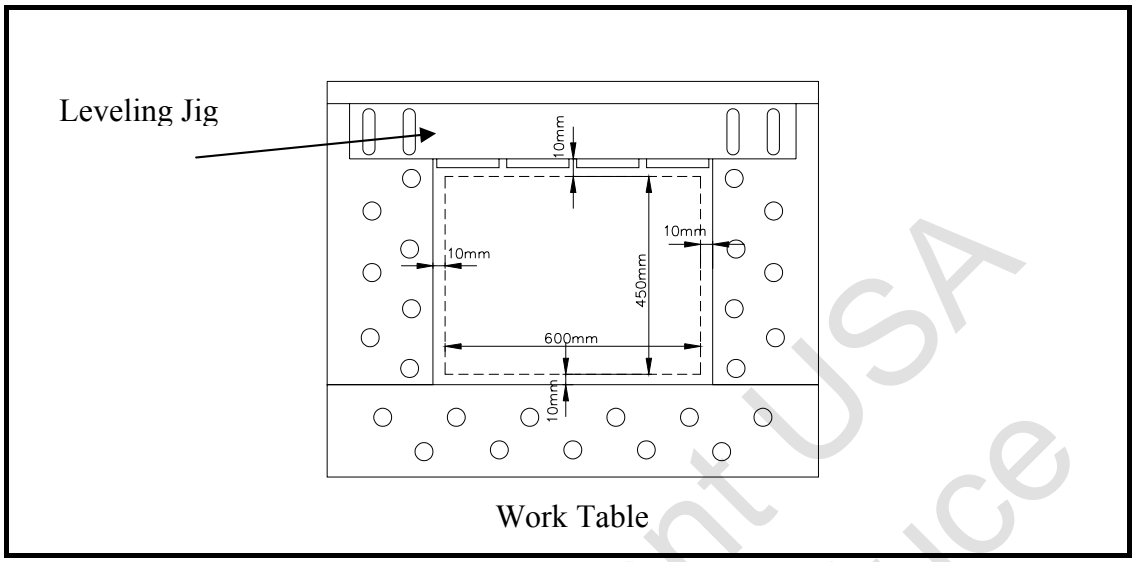

Figure 7.5 600*450mm work table and leveling Jig

7.6 Caution

Install the workpiece by the following methods, the workpiece is loose during the machining process, and will reduce the accuracy of machining.

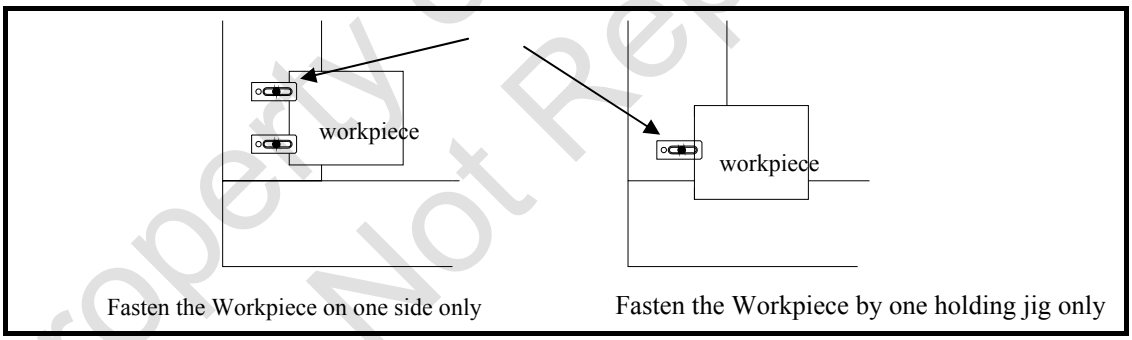

Fasten the Workpiece on both sides by using 2 or more holding jigs to hold Workpiece on table.

Please utilize the Level Jig properly.

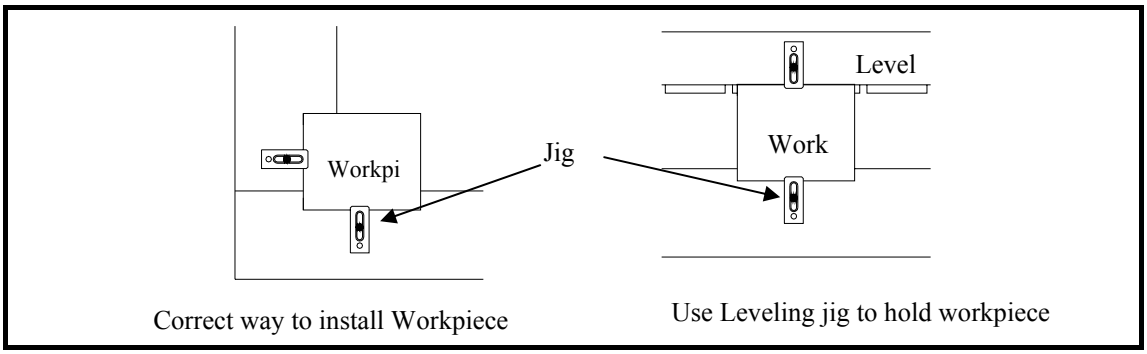

Property of Kent USA
Do Not Reproduce

7.7 Jig holder

Select the suitable holding jig for the Workpiece.

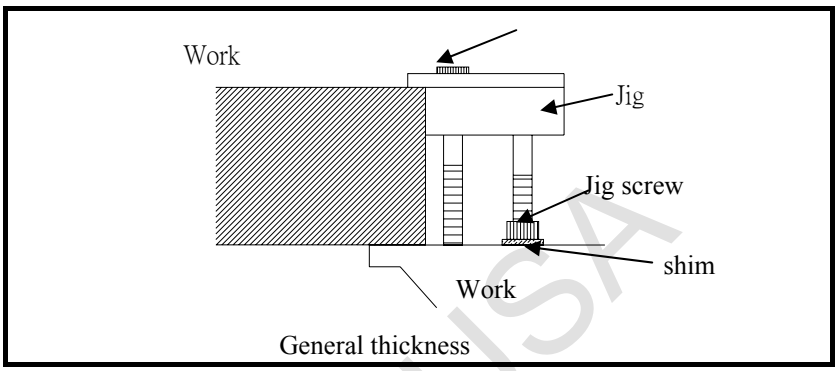

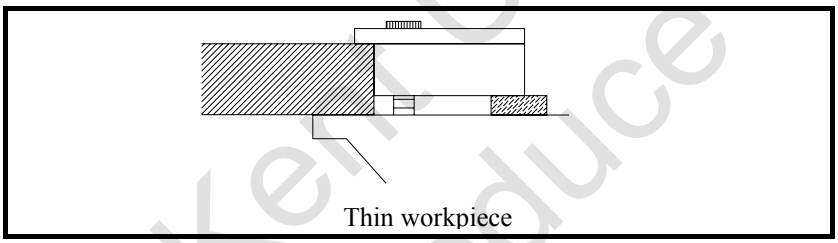

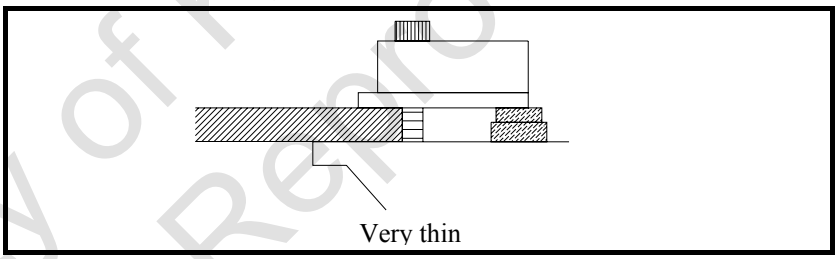

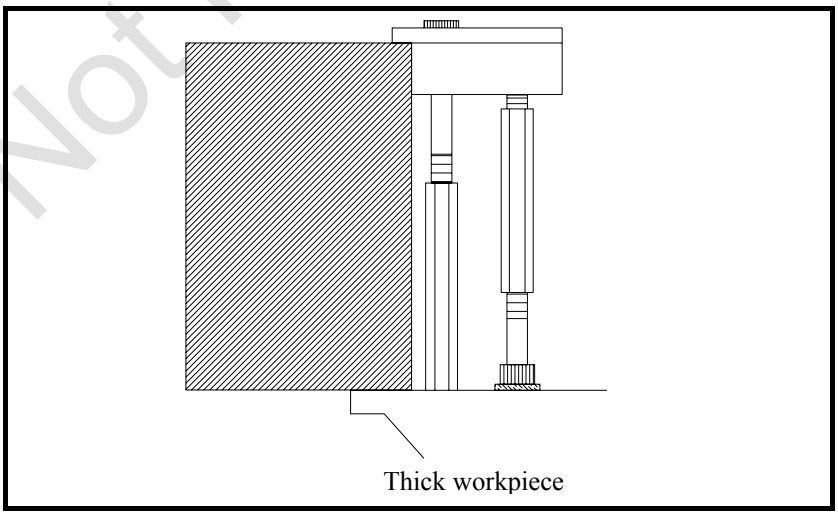

✐ Hint

Work table and leveling jigs are made of stainless steel. If the corner is too sharp, it might scratch the Workpiece. Therefore, while install the Workpiece, put it on plastic pad

Property of Kent USA
Do Not Reproduce

7.8 Procedures of installation

（1）Hold the workpiece slightly

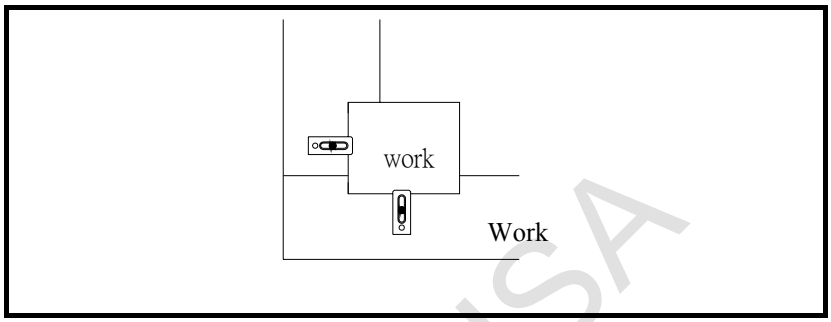

（2）Put the test indicator on the Z Column and measure the Workpiece. There is a M8 screw hole on the Z axis column. Shown as below:

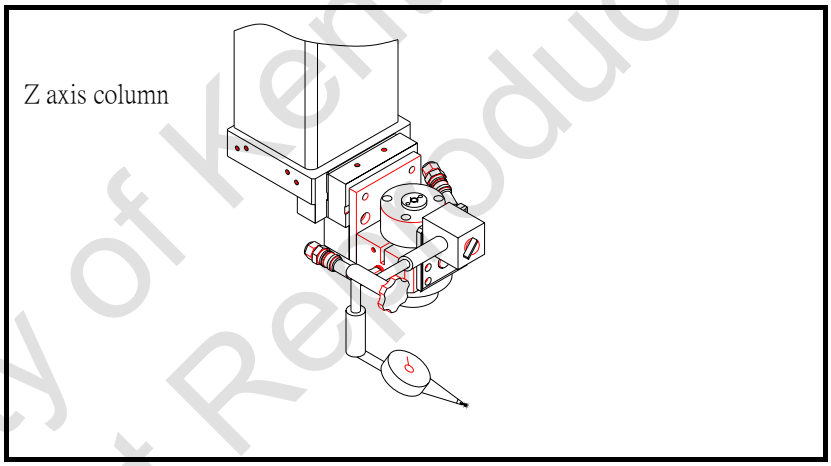

（3）Put the tip of test indicator on the surface of Workpiece. Move the upper head on X axis and Y axis to level the Workpiece.
Change Jig position or insert the shim to level Workpiece.

Property of Kent USA
Do Not Reproduce

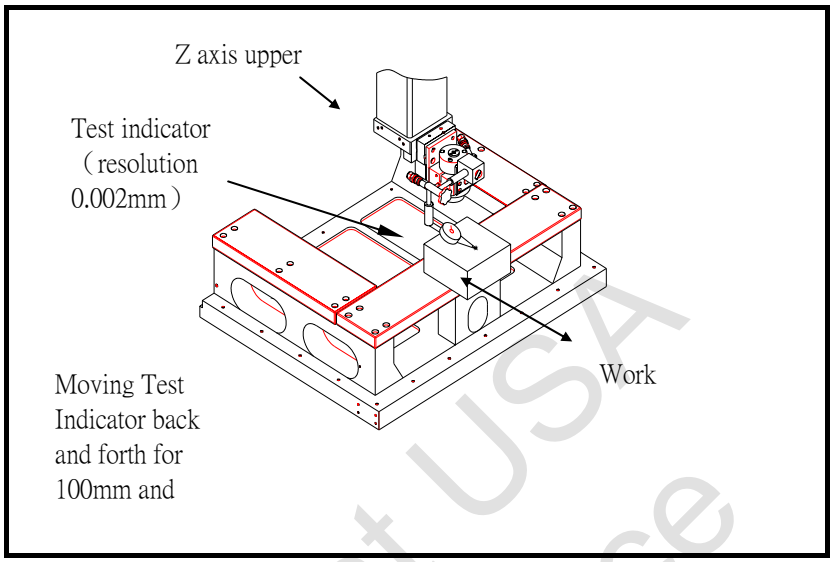

《JOG》《HIGHX100》
《－X》or《＋X》
《－Y》or《＋Y》

If the Workpiece is tilted, it should be moved alone axis direction to change the distance between flush head and Workpiece. The distance changed might cause the cutting wire feeds inconsistently or unexpected touch of flush head and Workpiece.

（4）Using one side as the base surface for indicating. Put the tip of test indicator on this side and level the Workpiece.
If the workpiece is tilted, use the screw drive to tap the Workpiece for leveling.

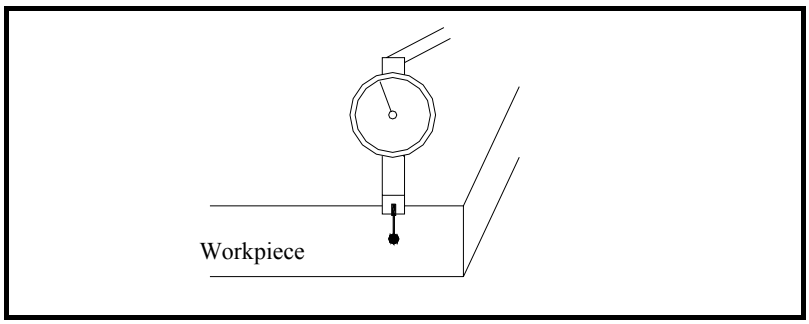

Property of Kent USA
Do Not Reproduce

《JOG》《HIGH×100》
《－X》or《＋X》
《－Y》or《＋Y》

（5）Tighten the fastening screw

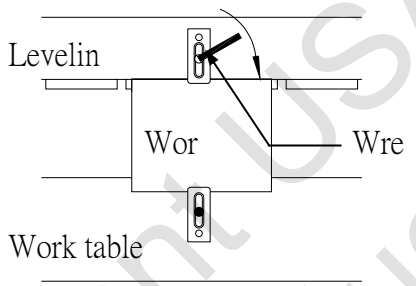

！Note

When workpiece is installed on leveling jig, do not over tight the jig screw, otherwise it will tilt the workpiece.

Property of Kent USA
Do Not Reproduce

8 NC Program Input

NC Program Input

There are 5 methods to input NC program:

（1）Call the saved program.

（2）Input NC program by key in and edit.

（3）Input NC program via I/O device.
（Input through Flash drive）

（4）Input NC program via I/O device.
（Input through NET from PC）

（5）Input NC program via I/O device.
（Input through RS-232 from PC）

8.1 Call the saved program

（1）Select【Machining】→《Edit Prog.》mode.

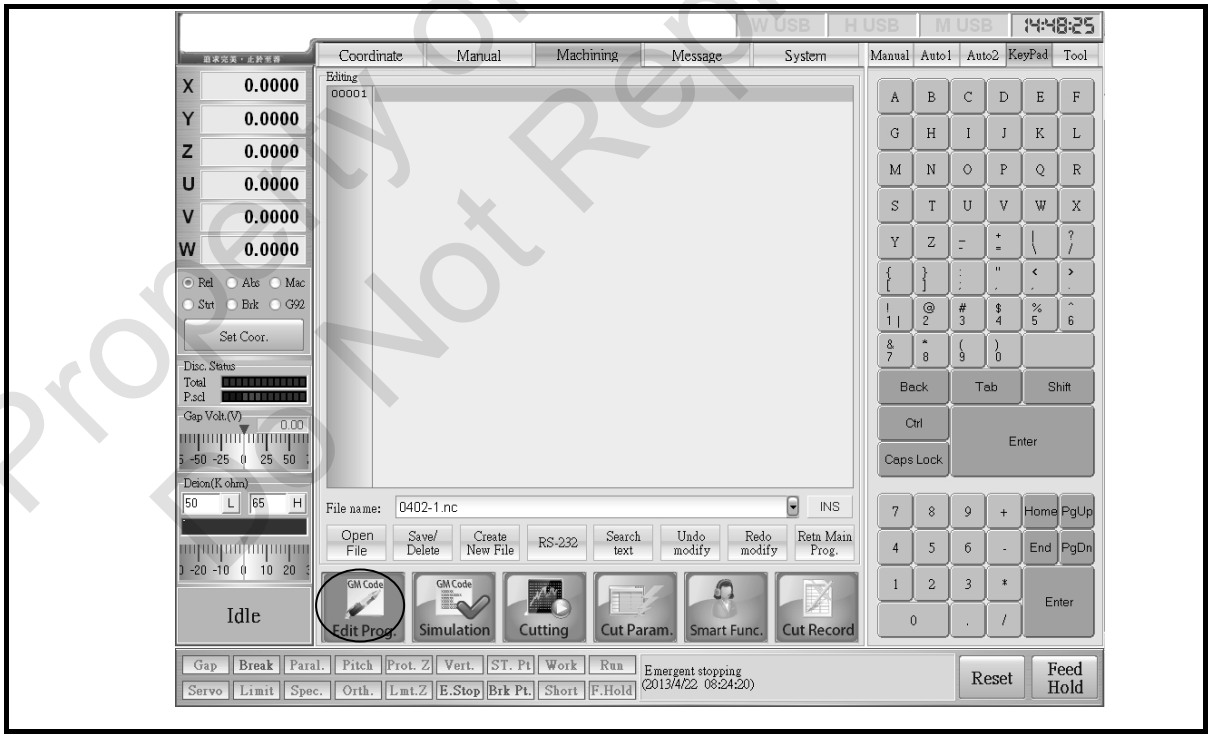

Property of Kent USA
Do Not Reproduce

（2）Open/delete file

1. Work：Choose the assign drive, and then select the pre- processing program by moving the mouse or《←》,《→》,《↑》,《↓》keys.
2. USB ：Insert the flash drive and press refresh to show the display USB drive. Next choose the assign drive, and then select the pre- processing program by moving the mouse or《←》,《→》,《↑》,《↓》keys. To remove the flash drive, press 「Remove Flash Drive」. Remove the flash drive after a message is shown otherwise the data may vanish as the result.
3. Delete Content/File：Press「Delete Content」or「Delete File」, a confirm message will appear. Click OK to delete, click Cancel to cancel the move.

Move the mouse to the content

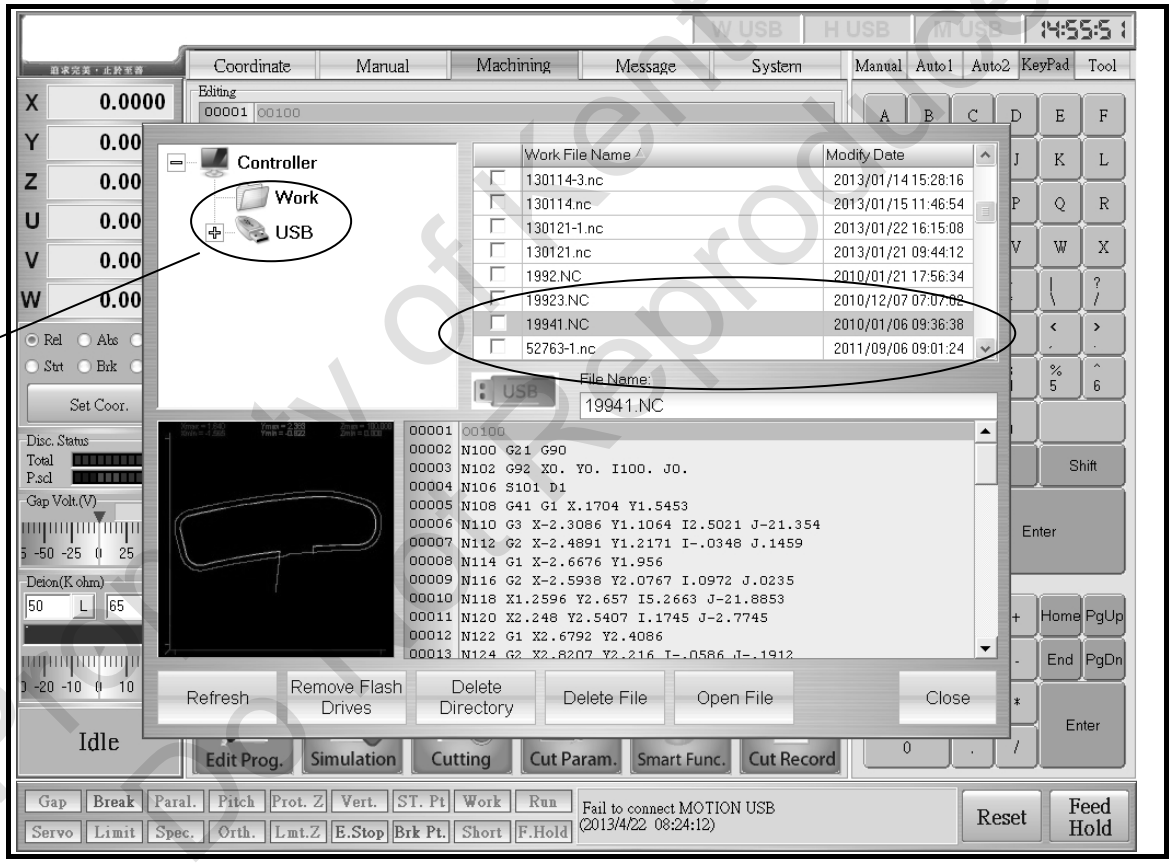

Property of Kent USA
Do not reproduce

（3）Click the assign file to open it.

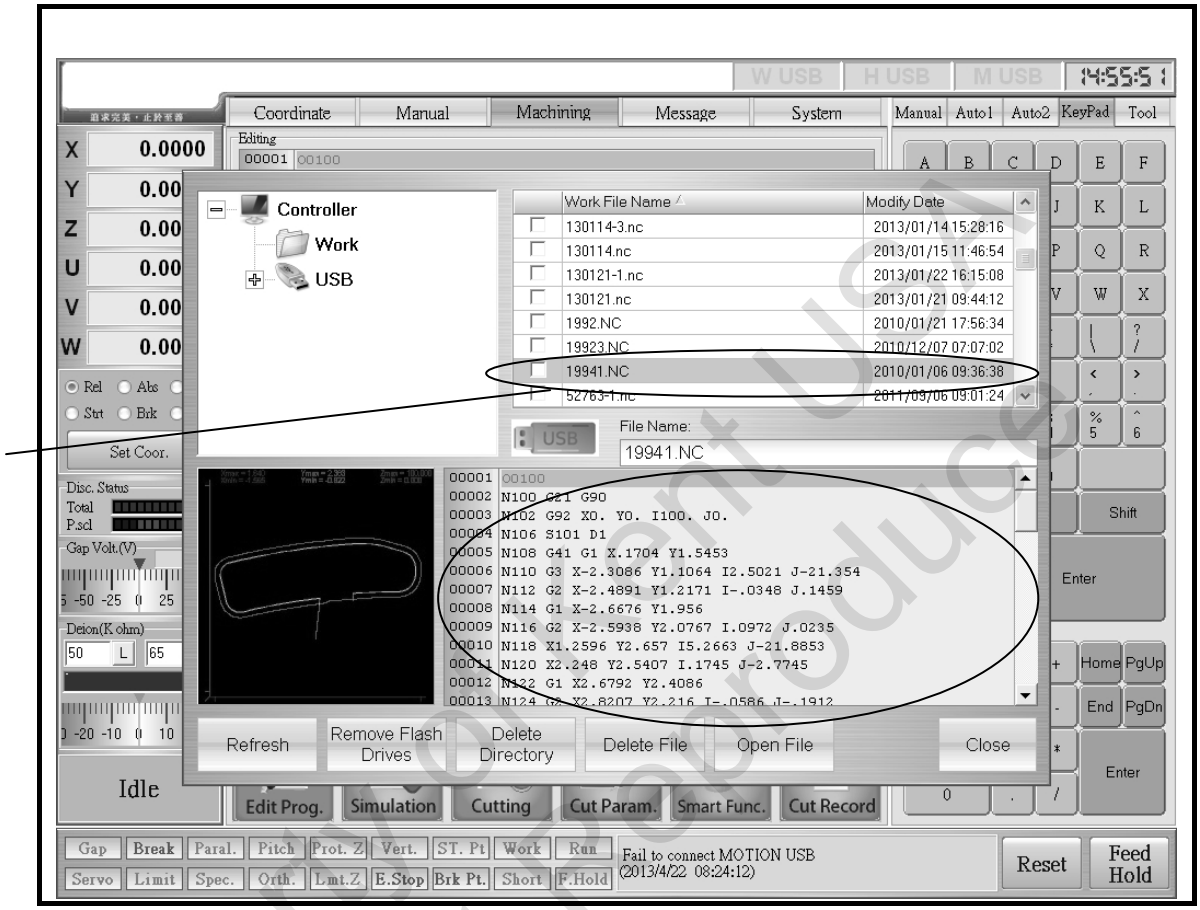

Property of Kent USA
Do Not Reproduce

※Open the file by using graphic preview.

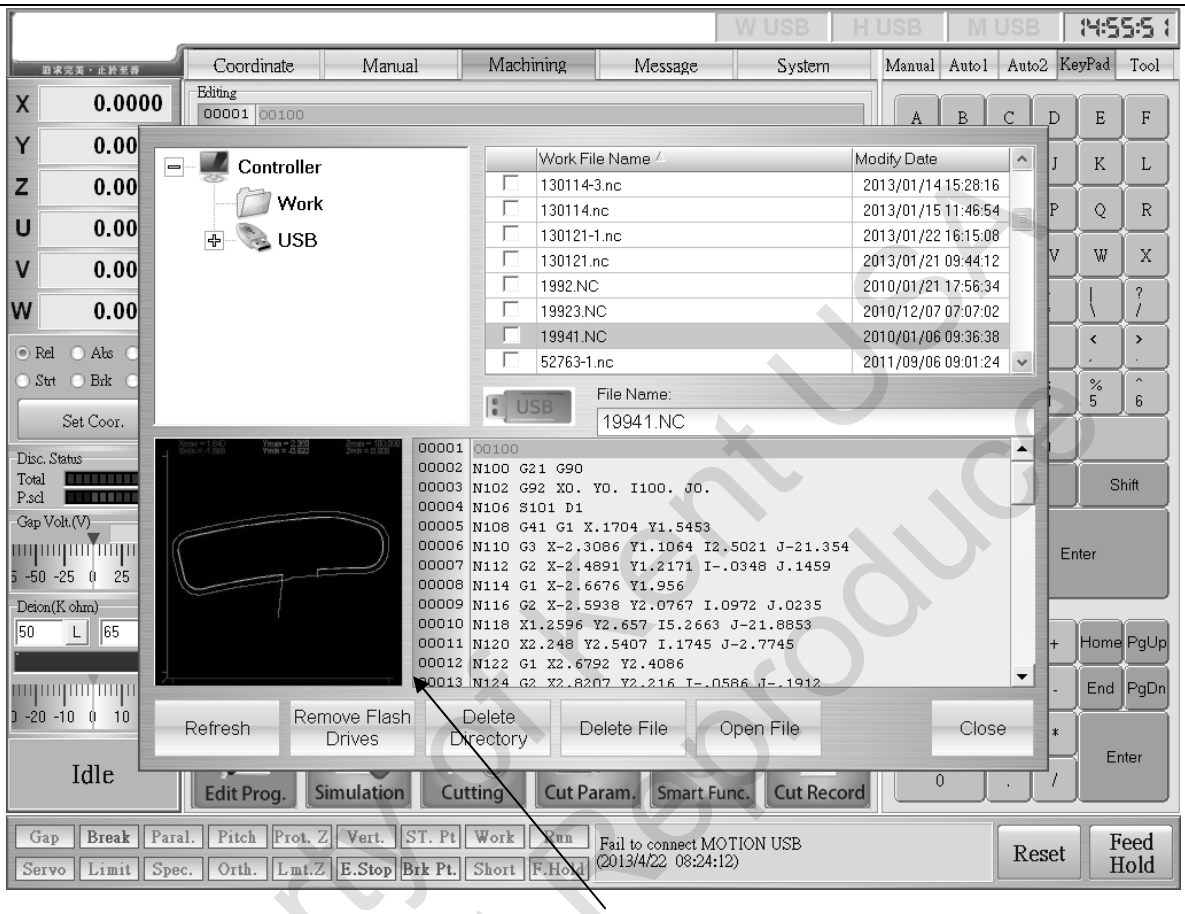

A simulated graph will appear when moving the mouse to the program name. This saves the time for the operator to search the program.

! Note

Before using the graphic preview function, graphic simulation process needs to be done. Or there is no graphic to preview.

Property of Kent USA
Do Not Reproduce

8.2 Key in and Edit program

8.2.1 Add New Program

（1）Select【EDIT】Mode.

（2）Press「Create a new file」, and then key in the file name.
（Example is shown below：ABCD）

（3）File Extension
① NC：KENT USA-EDM machine processing file extension. ② Subprogram：File extension for machining subprogram.

Key in new file name.

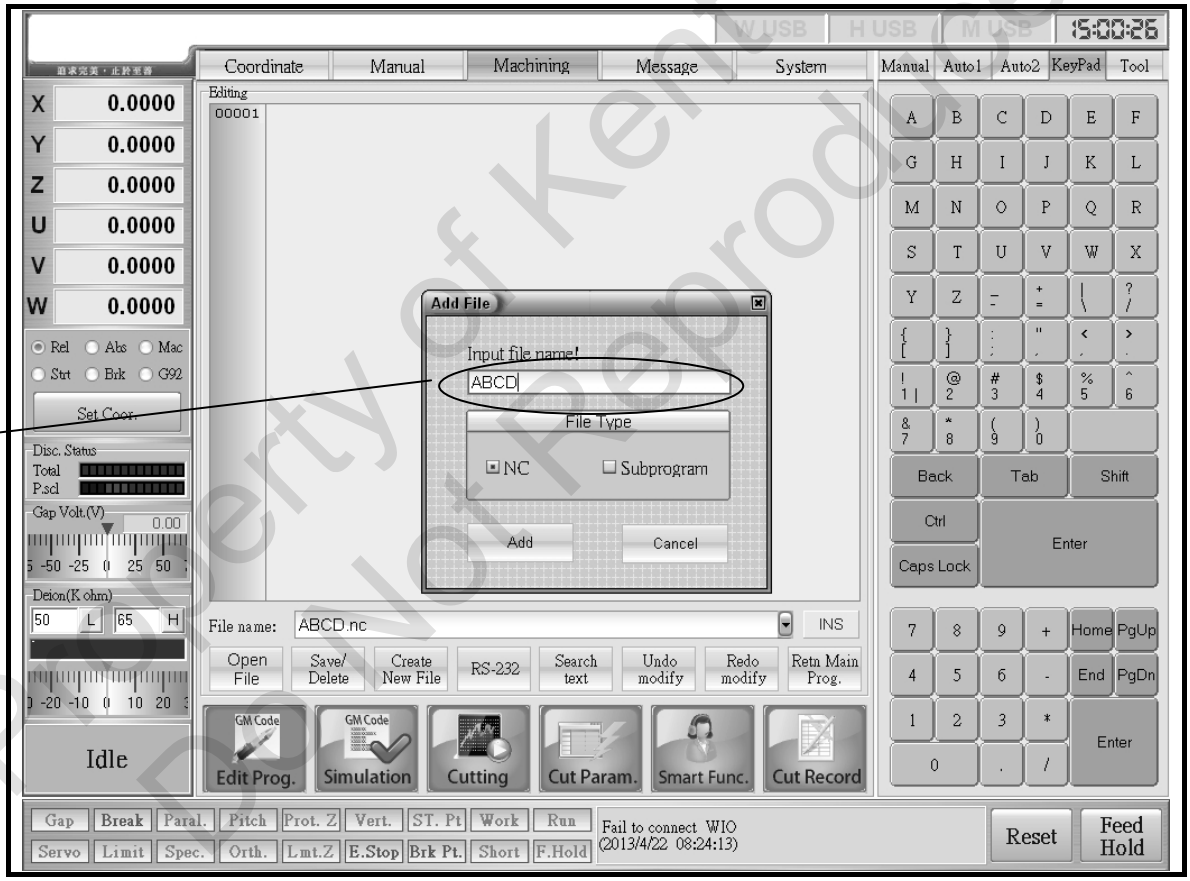

✐ Hint

＊ The NC program can be read as long as it matches to the file extension above, but the program may not able to be performed. This is because the G&M Code was being created by different company.

＊ When edit the program, G92 cannot be edited. Main program needs to be edited first in order to simulate the graph.

Property of Kent USA
Do Not Reproduce

（4）Press INPUT and enter Edit Screen.

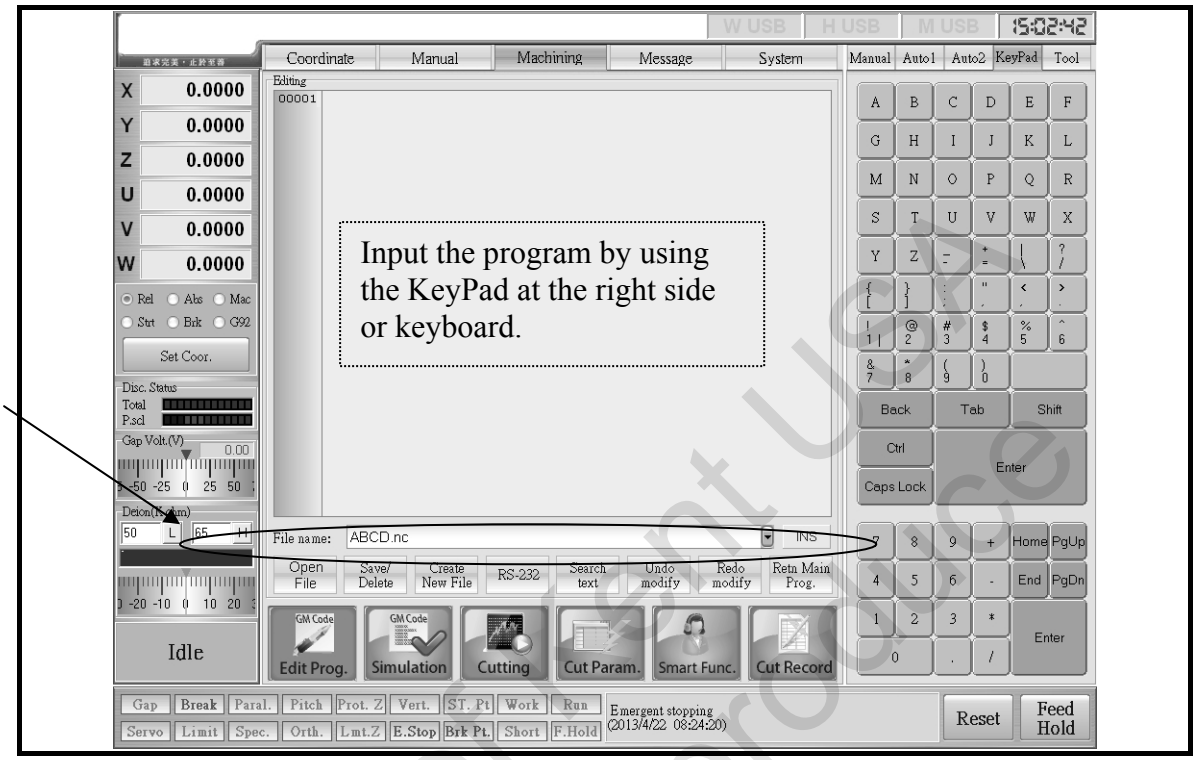

（5）Contents of new program.

（6）When the program edit is complete, press 「Save/Delete」 Save or the program won't be saved in the Work file.

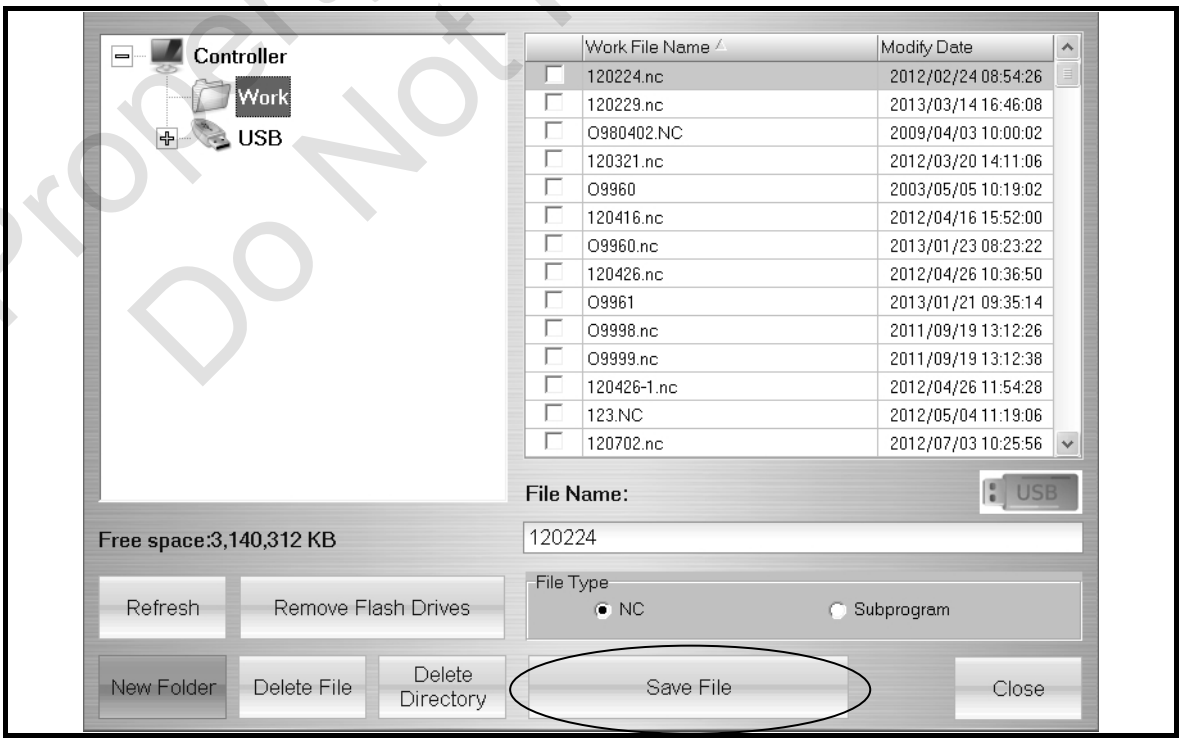

Property of Kent USA
Do Not Reproduce

8.2.2 Input via RS-232

（1）Connect RS－232 to PC.

※ RS232 cable should be made by customer. Please refer to Appendix (I).

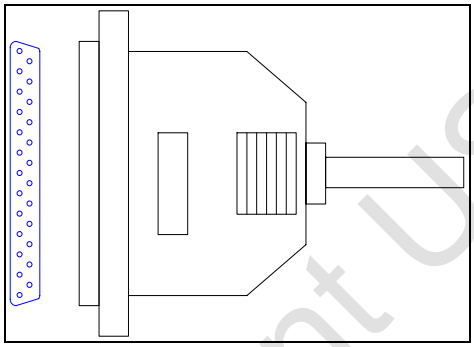

（2） Select【EDIT】to enter the code.

（3） Press「Input via RS-232」to setup Communication Setting. The content needs to be same with the CAM setting. Next press Connection Test to test the connection. A message will appear when connect successfully. If not, check the setup data and do the re-test.

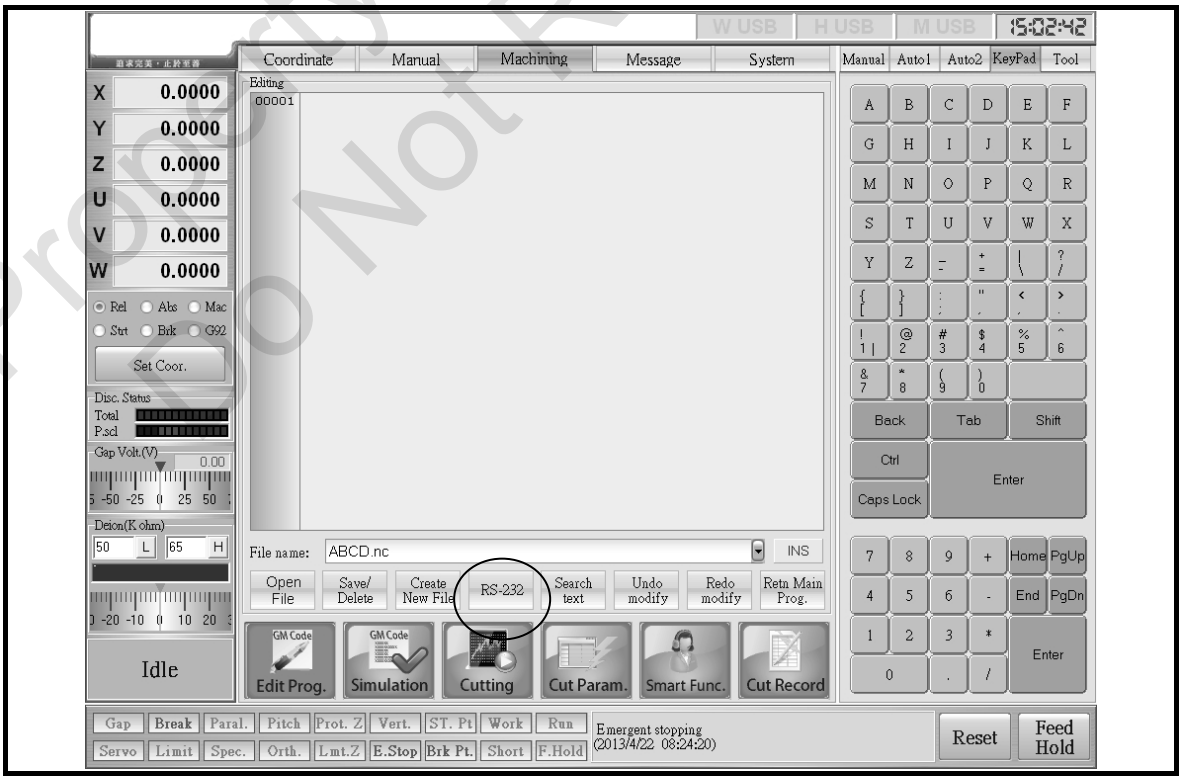

Property of Kent USA
Do Not Reproduce

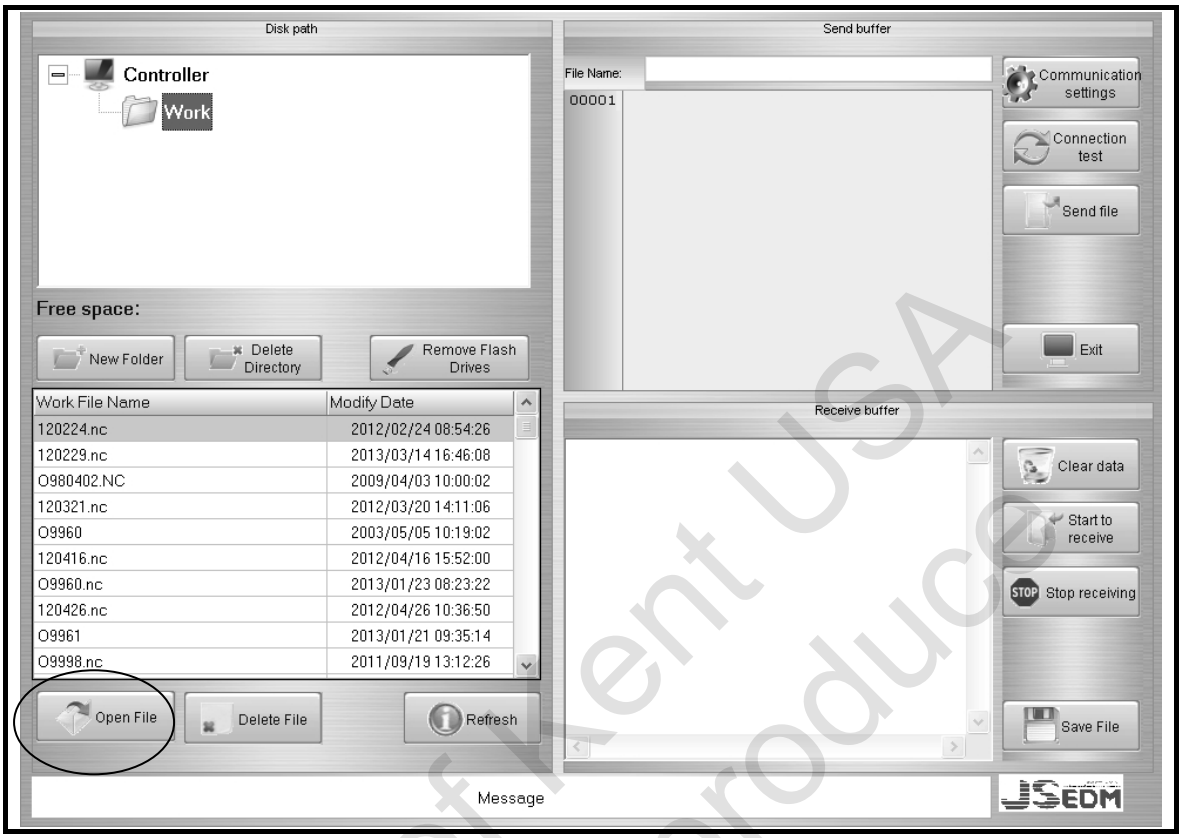

（4）Press Start Receive to send the data from CAM, at this point in the buffer zone will begin to receive the program until it ends.

（5）Press Save file and save the receive program to the Work file

（6）To receive new program, press Clear Document to delete the recent document.

8.2.3 String Search Function

String Search Function is to “Find”, “Replace” or ”Block Copy”, ”Move” in program. In Edit Screen, press String Search to enter “String Search”.

（1） Search：1. Under「String Search」, input the string and do the search. Press Next if everything is corrected.

2.Cursor is moved to the search result.

3.To find a same string, press Search next.

Property of Kent USA
Do Not Reproduce

Ex: ”X”, and then press（Search next）.

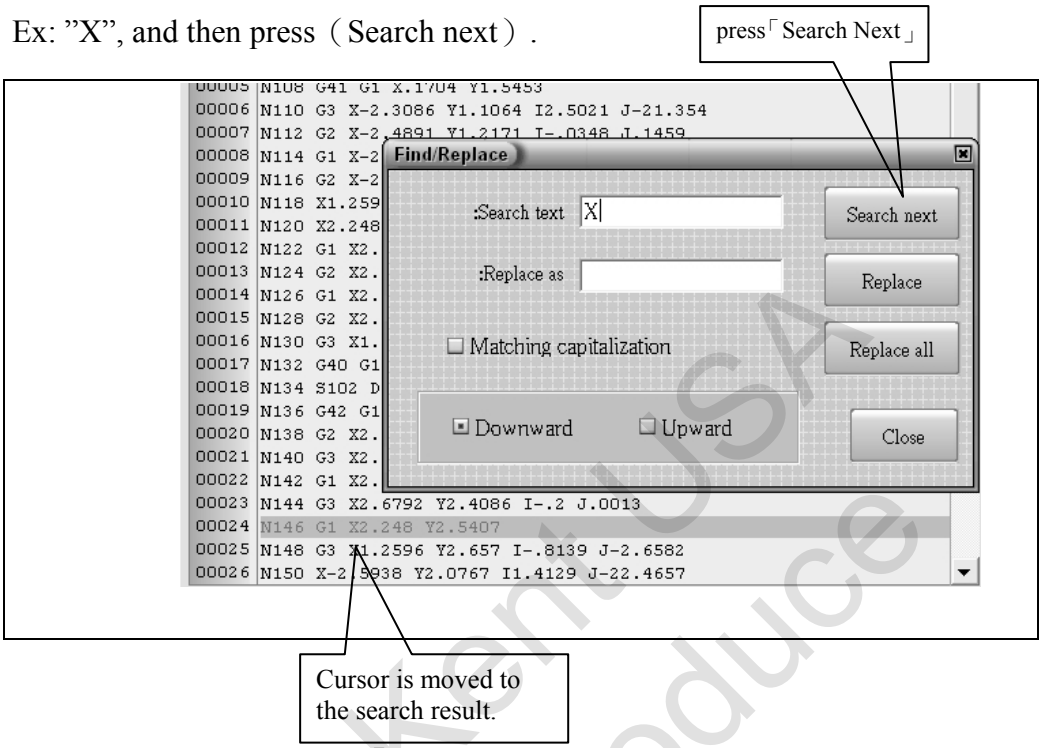

（2）Replace：1.In「String Search」screen, input the String for replacement, press Replace if everything is correct.

2.The same string between「Search Content」and program will be replaced.

3.The same strings between Replace All and 「Search Content」will be replaced.

Ex: ”X” change to ”Y” and press（replace）.

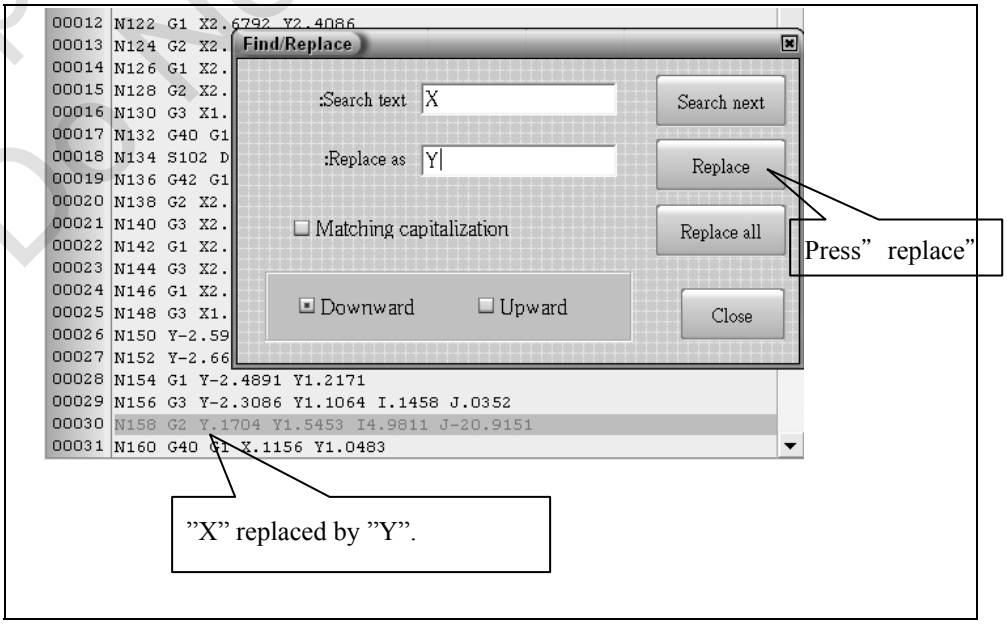

Property of Kent USA
Do not Reproduce

✐ Hint

Not Found, the message is shown as below：

8.2.4 Undo Edit Function

When input the wrong G &M code or coordinate, press Undo Edit and return to the initial set.

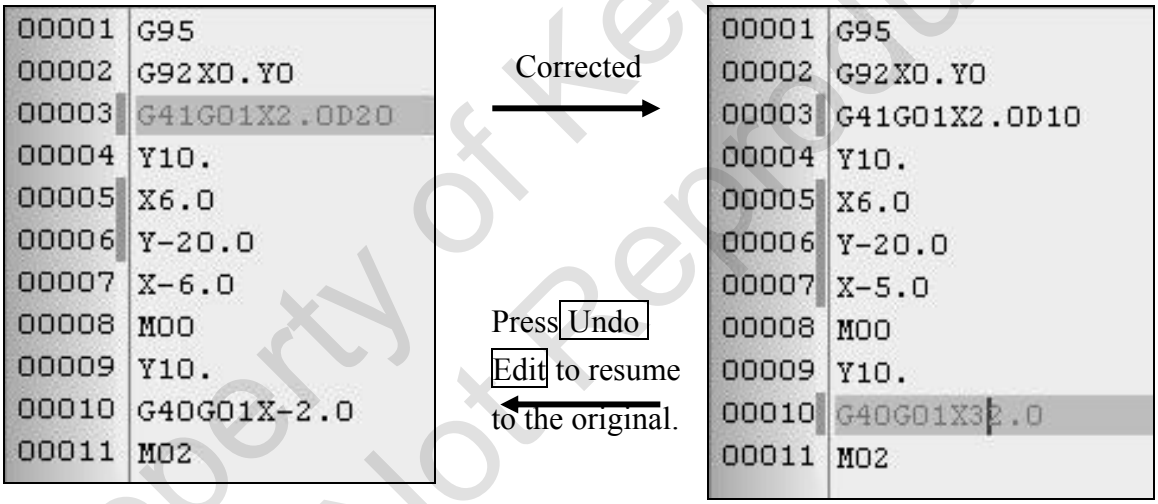

8.2.5 Repeat Edit Function

Press Repeat Edit to return to the last program.

Property of Kent USA
Do Not Reproduce

8.2.6 Return to Main Program Function

Open the subprogram and press this function, the system will return to the main program rapidly.

（1） Open the subprogram processing program, after operate the processing simulation click scroll key. At this point, the file name will appear on the main program and the subprogram.

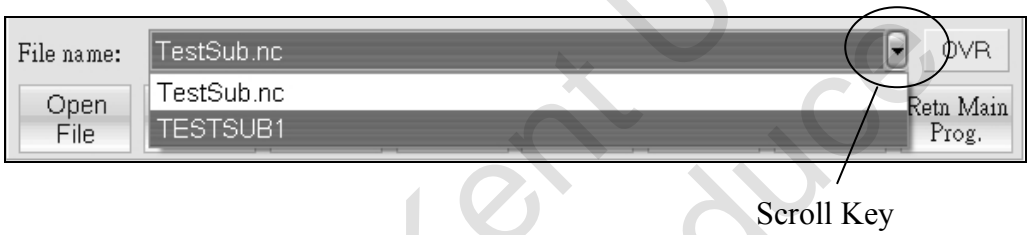

（2） Select name of subprogram “TESTSUB1”, “TESTSUB1”NC program will display on the programming area.

（3） Click Return to main program or click the file name of the main program to return to main program.

8.2.7 Programming area edit function

Block copy, cut, paste, delete function：

① Select the edit block and then right click the mouse. Show as follow：

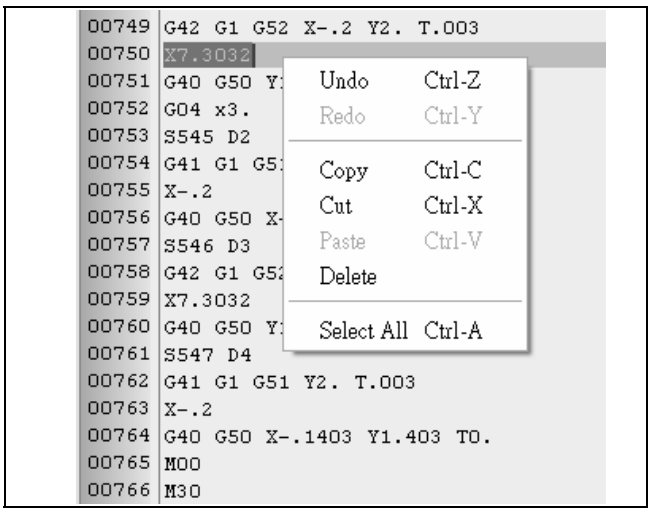

Property of Kent USA
Do Not Reproduce

8.2 Reading NC programs from I/O devices

8.3.1 Input the program for flash drive

（1）Insert the flash drive.

（2）Setup controller：

1. Press《Edit》under 【Machining】
2. Picture of flash drive will appear after pressing Refresh
3. Select the flash drive or the content below to show the files from the flash drive.
4. Press Open File to read the program on the controller.

To save the program in the controller, press save/delete under 《Edit》.

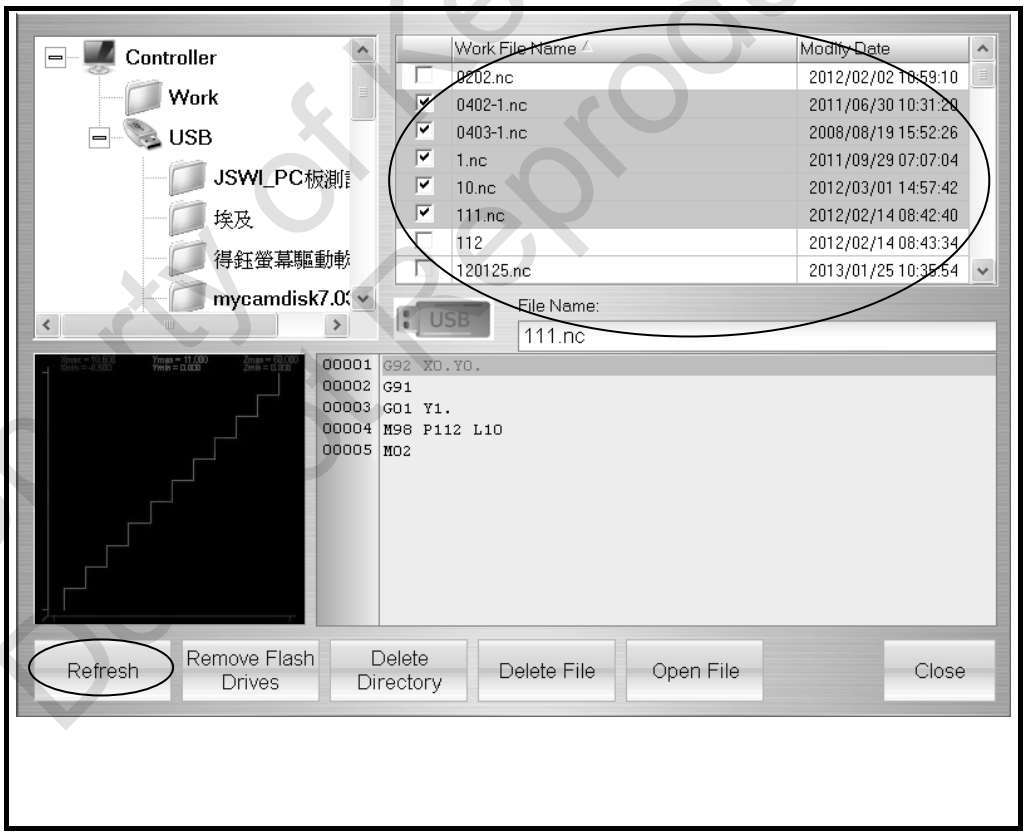

Property of Kent USA
Do Not Reproduce

8.3.2 Import/Export via Networking

（1）Connect the machine to PC via networking.

（2）Controller setting：

While using Net drive setting, the PC networking has to be set too. Please refer to 『**Appendix 2**』 PC setup.

✐ Hint

※Network cable has to be done by customer. The network cable can be found in PC store too. （Spec.：RJ-45）。

✐ Hint

※NC program can be created via the following methods：

① Input and Edit program via KENT USA Wire EDM Operating System.

② Use CAD／CAM program such as TCAD/CAM, MASTER CAM, ESPRITE CAM, etc. Generate drawing to NC program.

※ KENT USA EDM provides Optional Accessories: MY CAM。

✐ Hint

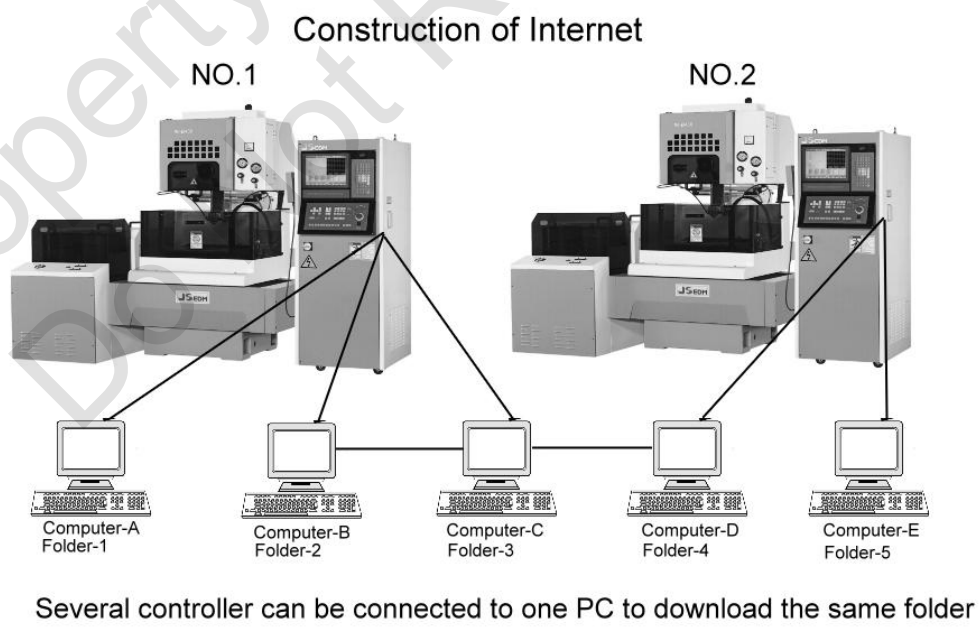

Property of Kent USA
Do Not Reproduce

（2） When the network setting is reference from 『**Appendix 2**』, two computer user name will appear under the work group. Hence, copy the processing program to the "Work" file from the controller. Please refer to Chapter 8, section 8.1.

Appendix I.：RS－232 Cable

The wiring of RS－232C cable is different from one to another, it is

base on the COM1 or COM2 connector on each PC.
（There are 25PIN and 9PIN connectors）.

（1）COM1（or COM2）: 25PIN connector：

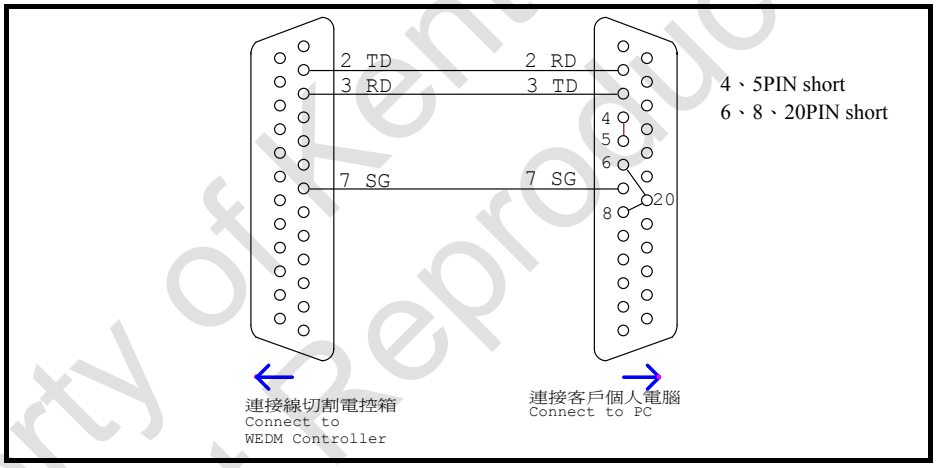

（2）COM1（or COM2）：9PIN connector

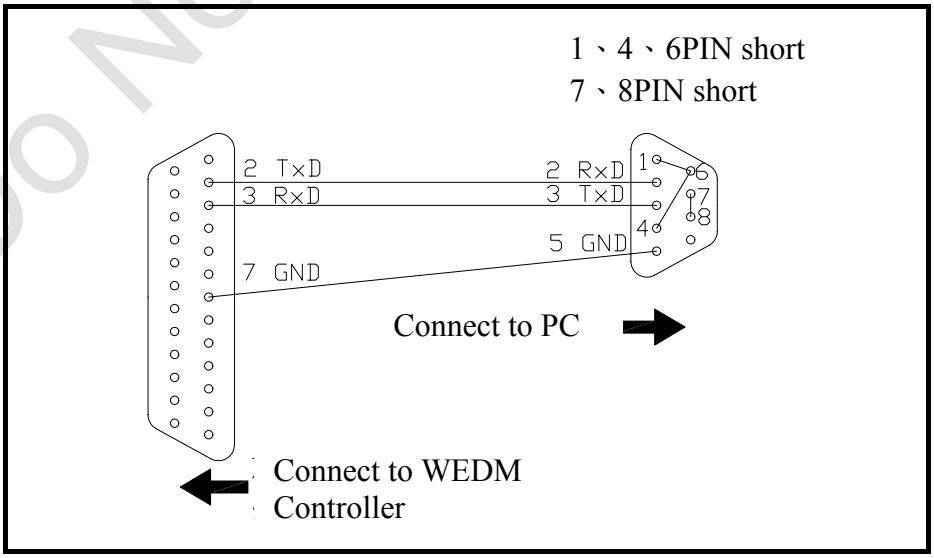

Property of Kent USA
Do Not Reproduce

9 Parameter Setting

Actual parameter setting can be setup in《Simulation》 under【Machining】.

Press Parameter Setting after call NC Program（Figure is shown below） Is divided into three simulation options

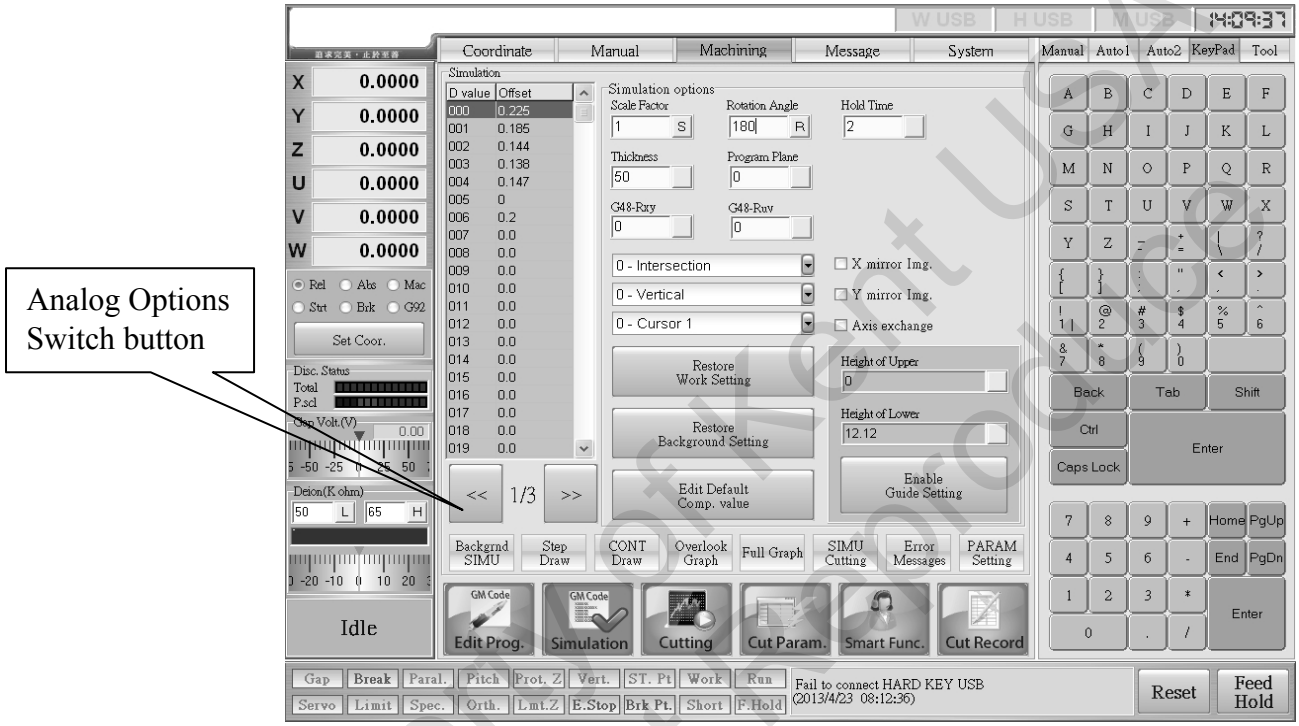

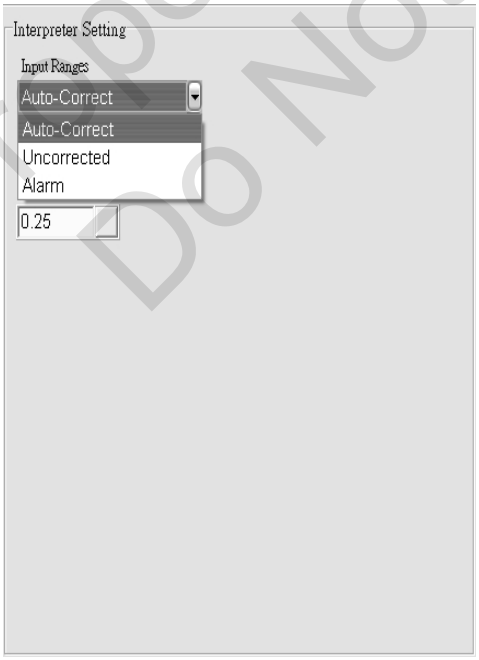

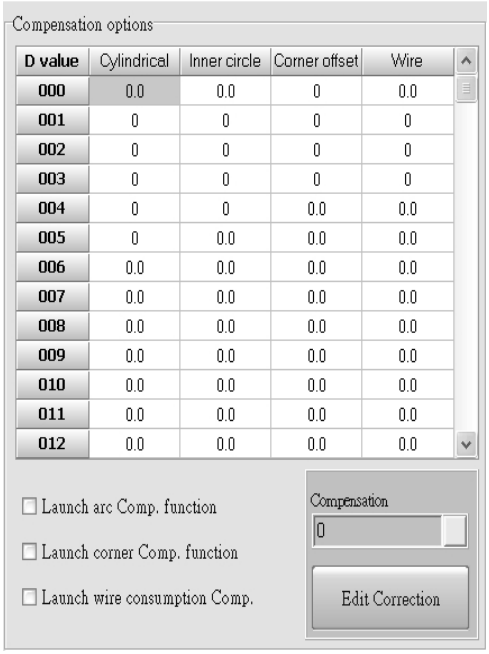

Property of Kent USA
Do Not Reproduce

9.1 Parameter Setting

（1）Scale Factor（Range：1000）

Enlarge or scale down the actual workpiece machining base on the same NC program.

（2）Rotating Angle（Range：－360~360）

Rotate the angle for actual machining in program.

（3）Hold time（Input Range：0~1000）

Add M21 to the single block of NC program to hold (Unit: s).
To cancel the hold, ass M22 in the program.

✐ Hint

＊ M21－Single Block Hold ON
＊ M22－Single Block Hold OFF

（4）Workpiece thickness（Input Range：-1000~1000 mm）

Input the thickness value of the workpiece. During machining, the workpiece will result differently base on the machining mode and program plane. Taper machining has the most obvious result.

（5）Program plane（Input Range：0 ~1000 mm ）

Base on XY plane which the program desires and the thickness of workpiece

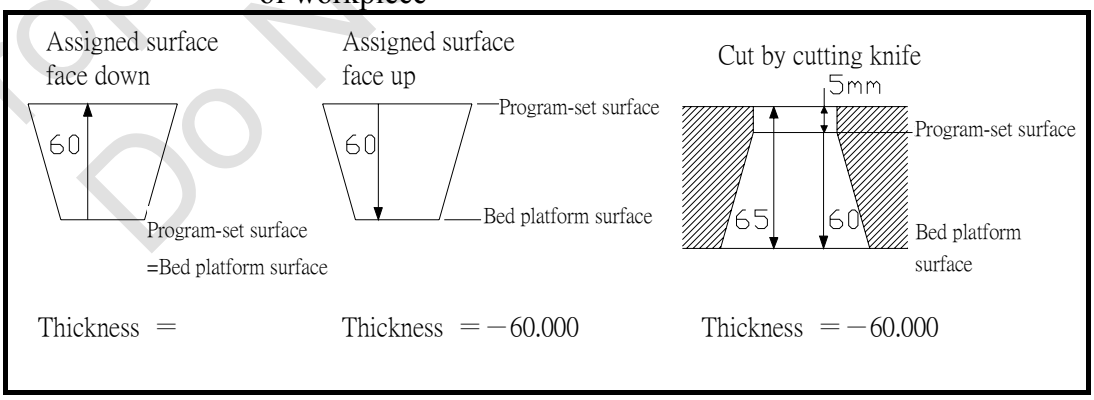

Property of Kent USA
Do Not Reproduce

Program plane	0mm	20mm
Workpiece thickness	20mm	-20mm
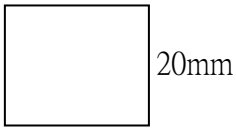	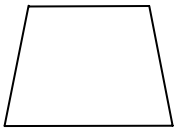	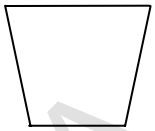
Program plane	5mm	15mm
Workpiece thickness	-5mm	-15mm
	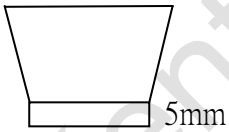	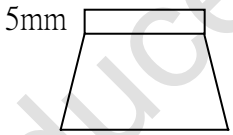

（6）Corner Radius G48-Rxy、G48-Ruv（Range：－1000~1000）
This setting should be worked with G code in NC program.
（G48、G49）

✎ Hint

＊ Operate「Background simulation」and then run「Machining simulation」in order to let corner radius valid.

（7）Notch path correction Mode（Option：0–intersection、1–<90° (Tangent line)、2–<90° (Around Circle)、3–Tangent line、4–Around Circle）
Main function：When the cutting angle of exterior angle and acute angle are small, a longer cutting path will be created during the correction. However, these cutting path will affect the cutting efficiency.

Property of Kent USA
Do Not Reproduce

Unset the compensation value, notch path correction mode =0–intersection

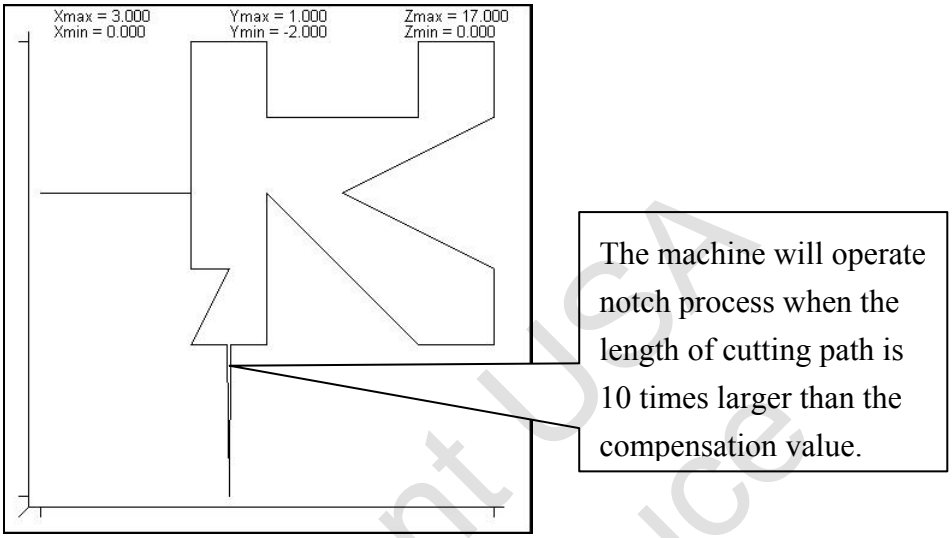

Set Compensation value as 0.2mm、Notch path correction Mode =1–<90° (Tangent line)

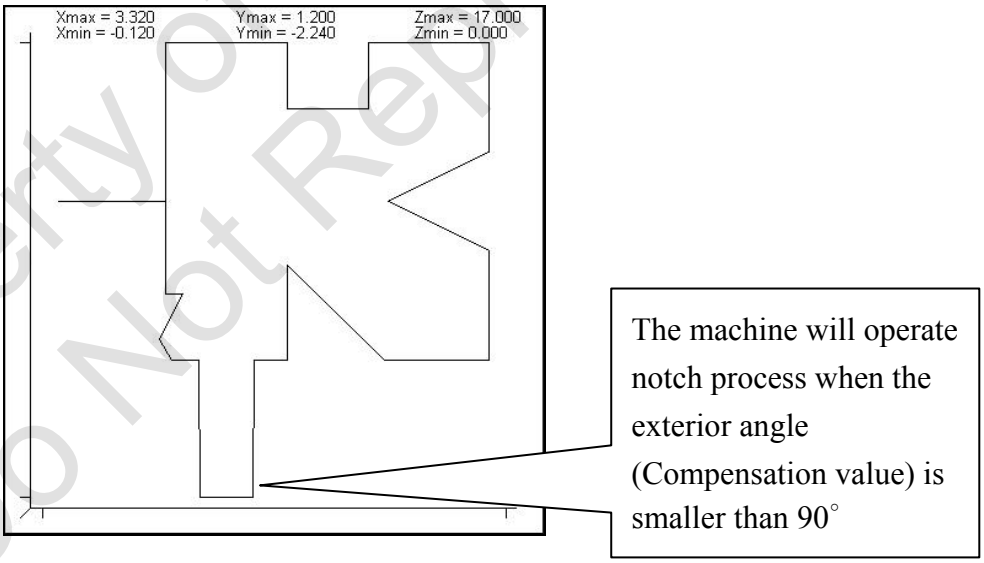

Set compensation value as 0.2mm、Notch path correction Mode =2–<90° (Around Circle)

Property of Kent USA
Do Not Reproduce

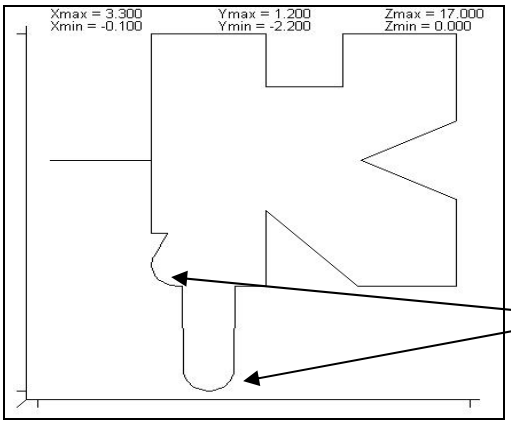

When the exterior angle is smaller than 90°, the machine will operate the around circle process on the

Set compensation value as0.2mm、Notch path correction Mode =3–Tangent line

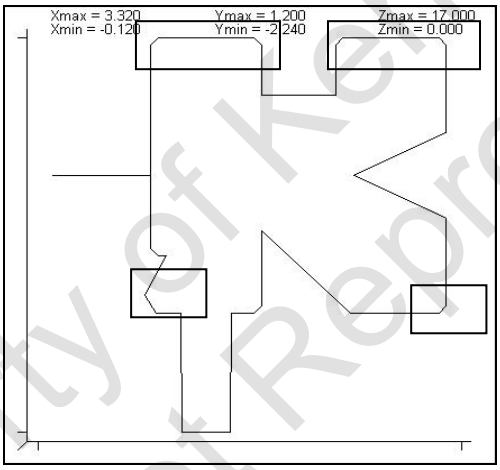

When the exterior angle is smaller or equal to 90°, the machine will operate notch process on the cutting path.

Set compensation value as0.2mm、Notch path correction Mode =4–Around Circle.

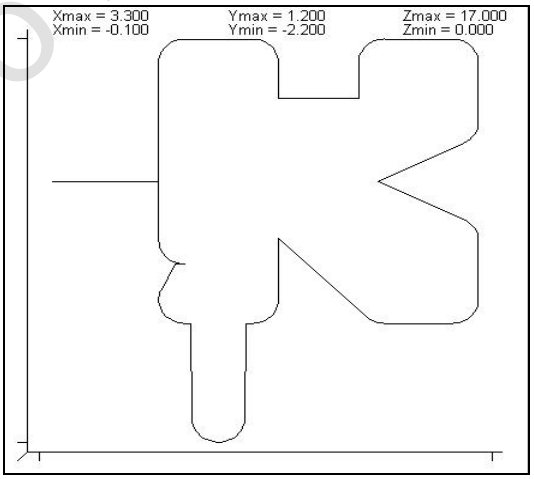

The machine will operate around circle process on every exterior angle of the cutting path
PS：This function is not appropriated for Taper-B

Property of Kent USA
Do Not Reproduce

（8）Cutting Mode（range：0–Vertical、1–Taper、2–Taper B）
Setup the cutting mode based on the program simulation setting.

Cutting Mode＝0 Vertical machining–（No Taper）

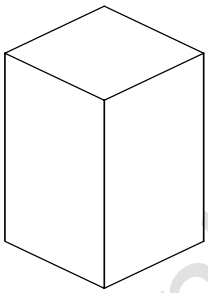

Cutting Mode=1–Taper（Angle assigned）

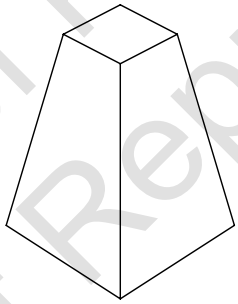

Cutting Mode=2–Taper B（Different Shapes on Top and Bottom area）

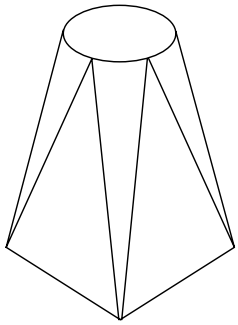

Property of Kent USA
Do Not Reproduce

（9）Display Mode（0–cursor 1、1–cursor 2）

Main function：When using Taper、Taper B NC program, the limit height of upper/lower guide can be checked based on the simulation screen.

0–cursor　1：Display the cutting

Vertical Mode

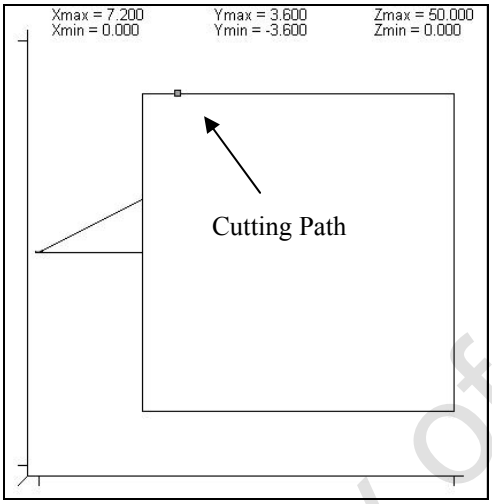

Taper Mode

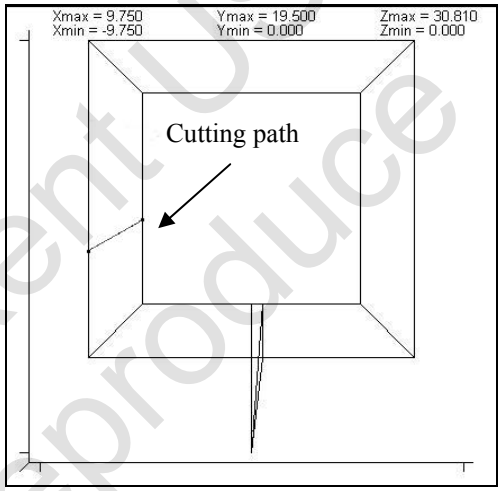

1–Cursor 2：Display the path of workpiece and upper、lower guide

Vertical Mode

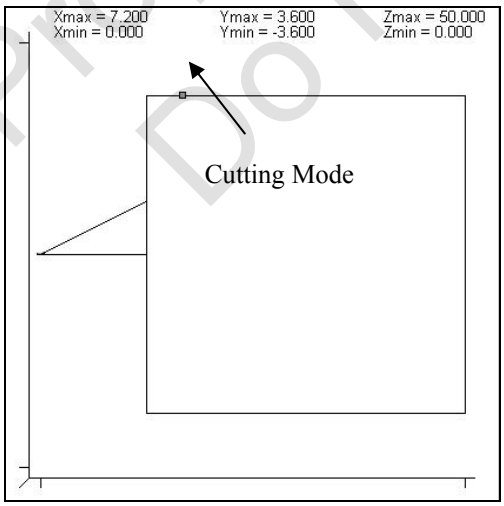

Taper Mode

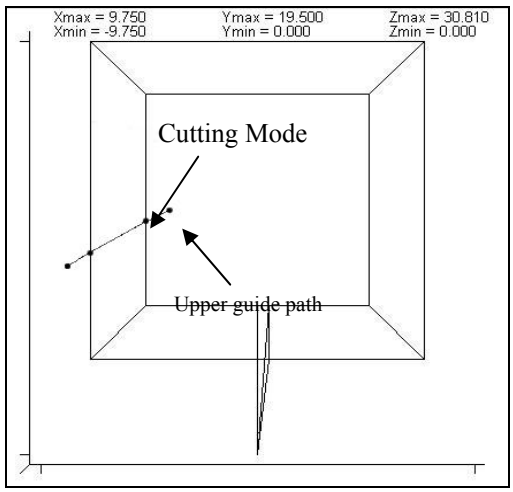

Property of Kent USA
Do Not Reproduce

（10）X axis mirror（Input format：OFF、ON）

Mirror the setting alone X and u axis.

（11）Y axis mirror（Input format：OFF、ON）

Mirror rhe setting alone Y and V axis.

（12）X axis and Y axis exchange（Input Format：OFF、ON）

Switch the X/U axis movement to Y/V axis movement.

Switch the Y/V axis movement to X/U axis movement.

Original	X mirror	Y mirror	X&Y mirror
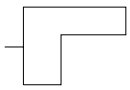	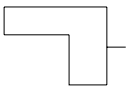	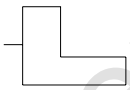	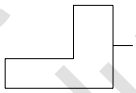
Axis Exchange	Axis Exchange and X mirror	Axis Exchange and Y mirror	Axis Exchange X&Y mirror
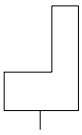	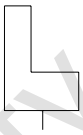		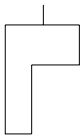

（13）Restore Working Setting

During the machining, if the background simulation has been utilized and the parameter for [Compensation value], [Machining Parameter] and [Simulation Function] have been changed; click Restore Working Setting to resume to the original setting.

（14）Restore Background Setting

When operating background simulation, to resume the background simulation parameter, select Restore Working Setting .

Property of Kent USA
Do Not Reproduce

（15）Edit default compensation value：The condition of the workpiece (such as: material, thickness, etc) will affect the compensation value. Hence, user should save the value in laptop or PC. For the user's convenience, a region in the system is designed to save these values.

Using Methods：

1. Click "Edit Default Compensation Value", a password required window will appear at this time.
2. A setup window will appear when entered the password.
3. "Simulation Compensation Table" is used for the machining simulation. Move the cursor to the assign value and press Save, the compensation value will also change.
4. "Default Compensation Table" is the value for recording. Move the cursor to the assign value and press Save, the compensation value will also change.
5. Under the non-save situation if the file has been changed accidently, press Re-load to resume to the previous value.
6. Select the assign value and press Copy single line to simulation to copy the default compensation value to the Simulation Compensation Table.
7. To copy all of the default compensation value to the Simulation Compensation Table, press Copy all to the simulation.
8. To copy all of the Simulation Compensation Table to the default compensation value, press Copy all to the simulation.
9. To edit the value in the table, please press Save right after you done with your process. Otherwise, Everything will resume to the last setting.

Property of Kent USA
Do Not Reproduce

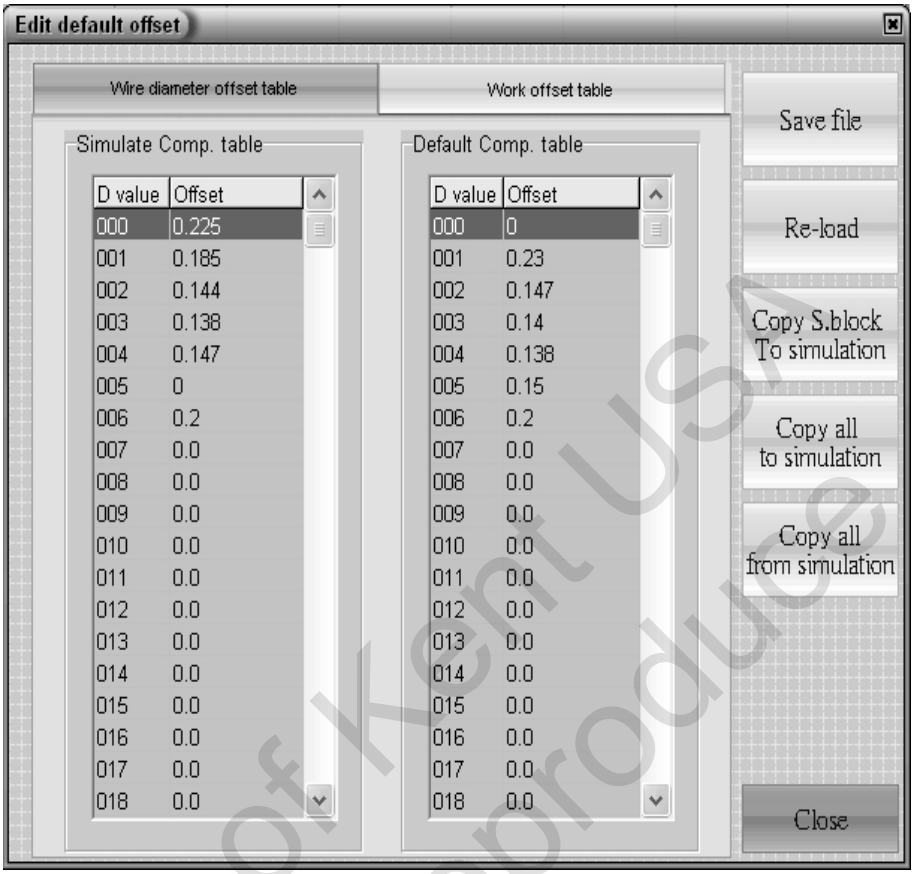

D value	Offset
000	0.225
001	0.185
002	0.144
003	0.138
004	0.147
005	0
006	0.2
007	0.0
008	0.0
009	0.0
010	0.0
011	0.0
012	0.0
013	0.0
014	0.0
015	0.0
016	0.0
017	0.0
018	0.0

D value	Offset
000	0
001	0.23
002	0.147
003	0.14
004	0.138
005	0.15
006	0.2
007	0.0
008	0.0
009	0.0
010	0.0
011	0.0
012	0.0
013	0.0
014	0.0
015	0.0
016	0.0
017	0.0
018	0.0

（16）Height of upper guide（Parameter will be inputted automatically after the vertical alignment.）

The distance between upper guide and work table. The parameter will change base on the movement of Z axis.

（17）Height of lower guide（Parameter will be inputted automatically after the vertical alignment.）

The distance between lower guide and work table.

※ To change the height of upper/lower guide, please input the password. The password is included in the CD rom.

Property of Kent USA
Do Not Reproduce

9.2 Interpretation Setting

（1）Input Range：

① Auto-Correct：This function is used to correct the tolerance which is caused by the connection between two segments. The tolerance will occur when the CAM Resolution is too low or the segments are overlap.

② Uncorrected：The correction will not be operated when there is an interfere or over cut between the segments. However, these error messages will still show on the screen. Machining can still be operated even though the error message is not solved.

③ Alarm：Error message will appear when there is an interfere or over cut between the segments. Error messages need to be solved to re-operate machining.

（1） Single Block Drawing：This function has to cooperate with the block draw time. Select "Single Block Drawing" and then click Step Drawing , the program will stop at every single block based on the block drawing time and then move to the next block.

（2） Block draw time：By adding M21 command in NC program, single block can be hold in a period of time.（Unit：Second）. Use M22 command in program to cancel this function or select "Single Block Drawing"

！ Notice

＊ If the error is too big when transforming CAM to G&M code，please contact with CAM manufacture to adjust the resolution.
＊ Adjust the program if excessive interference the interpretation.

Property of Kent USA
Do Not Reproduce

9.3 Compensation options

Main Function：Use the function below to cancel the machining controlling function such as arc, corner and wire consumption. This function avoids the workpiece from over machining. When the function is ON, the arc and corner compensative will start based on the D value.

✐ Hint

> ＊ Internal and External Arc、Corner Compensation Unit = Metric/English
> ＊ Wire Consumption Compensation Unit=Degree

（1） Launch arc Comp. function：When the program interpreted to the arc ring and 「Launch arc Comp. function」 is on, the program will start to compensate the arc radius automatically.

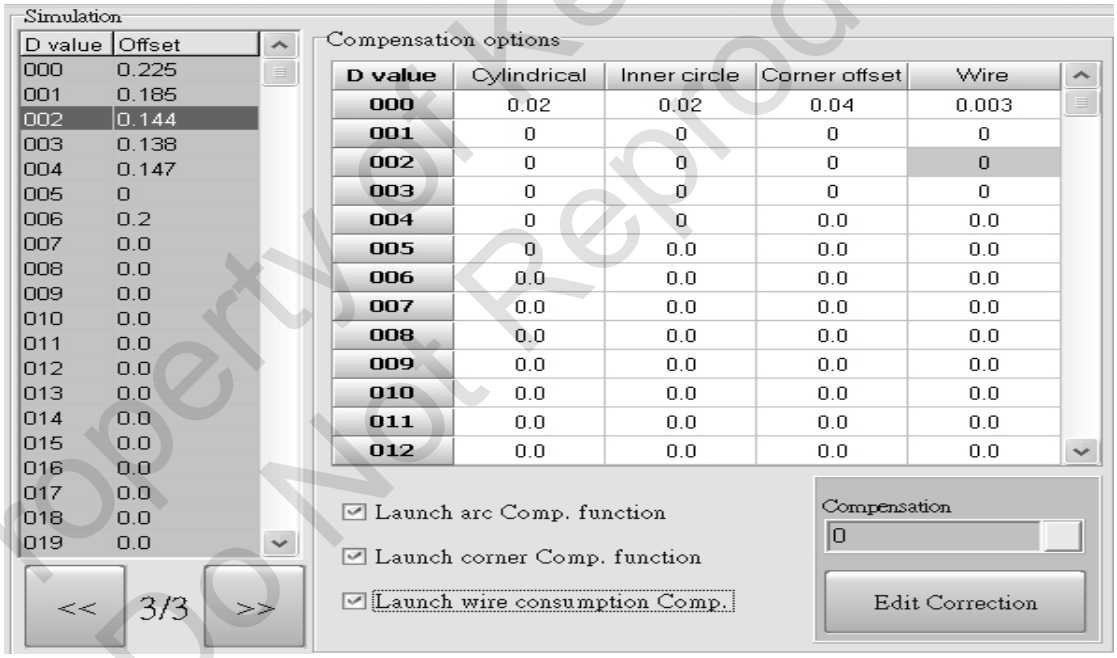

Ex 1：Punch Cut Compensation Value=0.02

Unselect “Launch arc Comp. function”

Select “Launch arc Comp. function”

Property of Kent USA
Do Not Reproduce

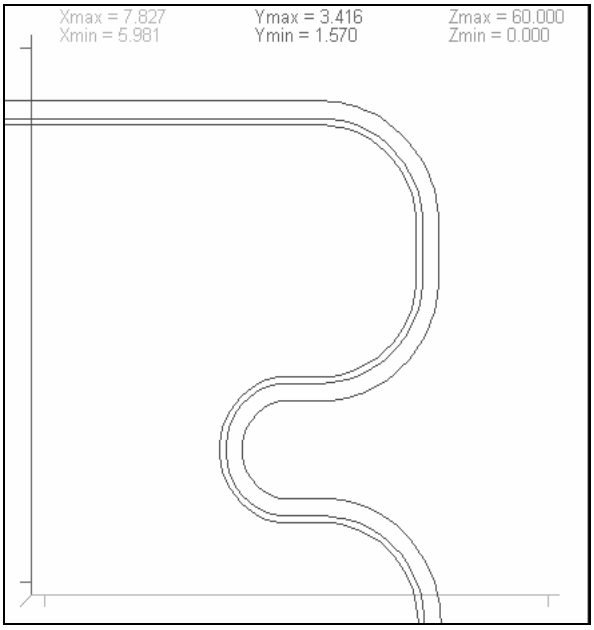

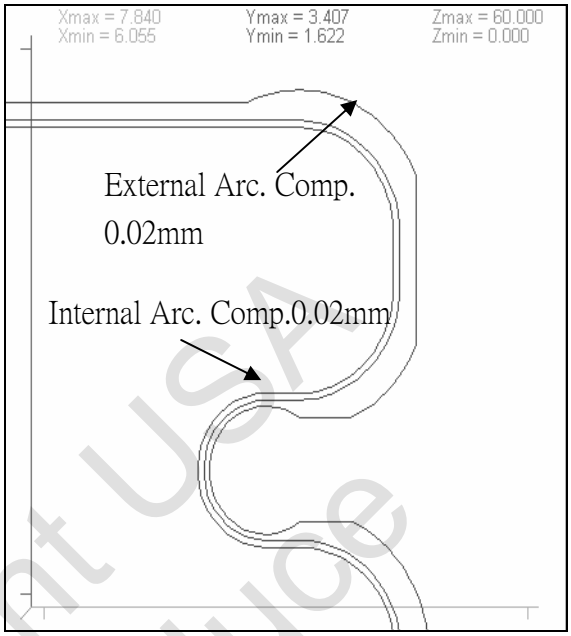

✐ Hint

※ Set G41、G42 and D Value to operate the program.
※ Suggest Setting：First cut 0.04、Second Cut 0.008 、Third Cut Close.
※ While Enable this function，Comp. Values need to be attached to every arc.
※ The parameter is the absolute value.

Property of Kent USA
Do Not Reproduce

（2） Launch corner Comp. function：When the program interpreted to corner, and 「Launch corner Comp. function」 is ON, the program will start compensate automatically.

Ex 1：Punch Cut Comp. Value=0.04

Unselect “Launch corner Comp.

Select “Launch corner Comp. function”

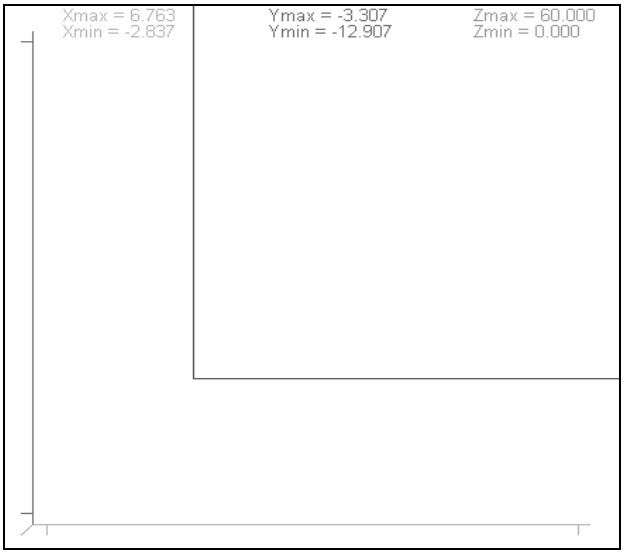

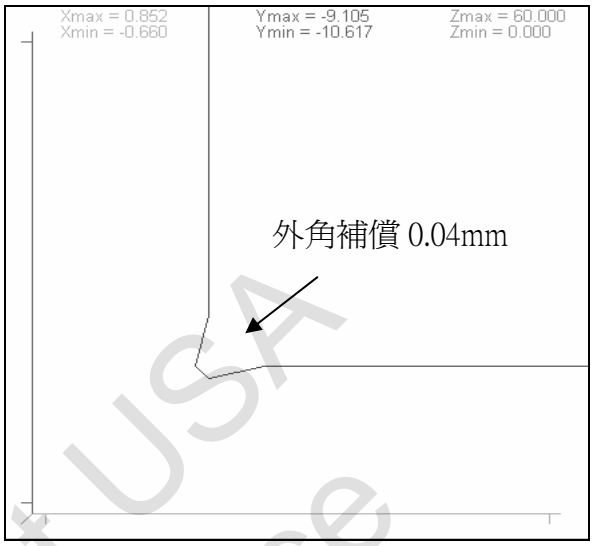

✐ Hint

※ Need to set G41、G42 and D value in the machining program to operate this function.
※ Suggest Setting：First cut= 0.04、Second cut= 0.02 、Third Cut close
※ When this function is ON，comp. value need to be added when the range is between 0-180°.
※ This parameter is an absolute value.

（3） Launch wire consumption Comp. ：If the cutting mode is set as taper or polygon and「Launch wire consumption Comp.」is ON. The machining will start to compensate the angle based on the height of upper and lower diamond guide

Ex1: Punch Cut Comp. Value=0.003 degree

1. Unselected "Launch wire consumption Comp."
2. Cutting Mode = Vertical Mode
3. Compensation Value = 0 degree

Property of Kent USA
Do Not Reproduce

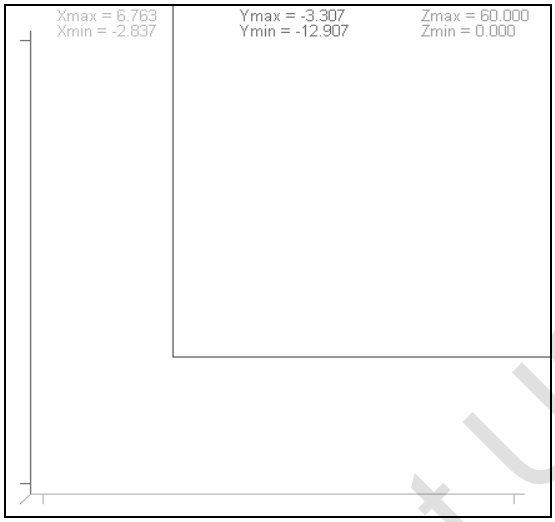

1. Select "Launch wire consumption Comp."
2. Cutting Mode=Taper or Polygon
3. Comp. Value = **0.003 degree**

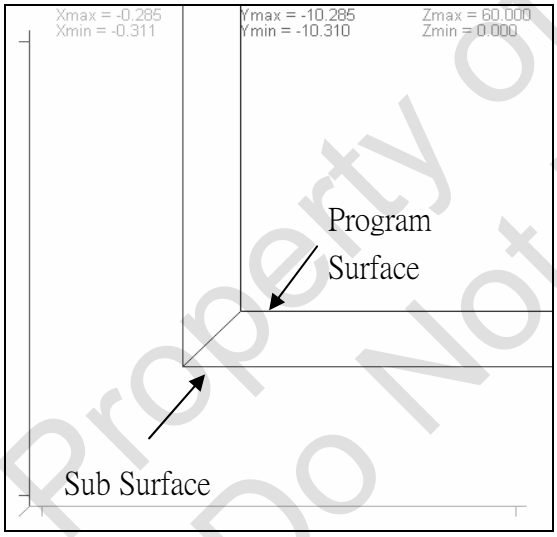

1. Select "Launch wire consumption Comp."
2. Cutting Mode=Taper or Polygon
3. Comp. Value = **- 0.003 degree**

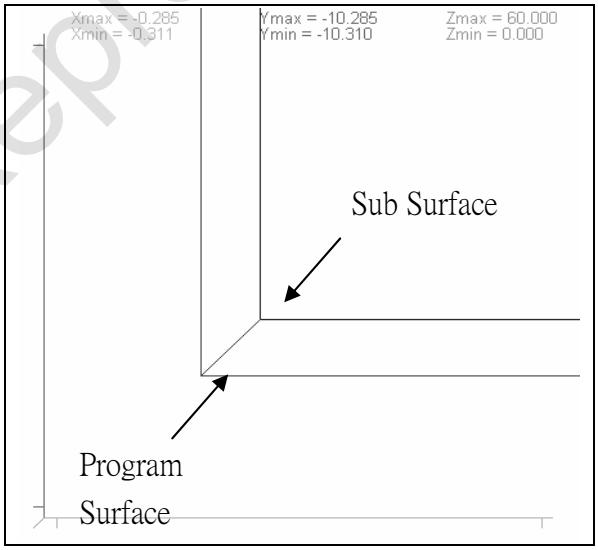

✎ Hint

※ Need to set G41、G42 and D value in the machining program to operate this function.
Suggest Setting：First cut= 0.003、Second cut= 0.0015 、Third Cut close

※ The parameter can input both positive and negative value.

Property of Kent USA
Do Not Reproduce

（4）Compensational adjustment value：This function is used to compensate the error when cutting the workpiece. The compensation value needs to be adjusted depends on the condition of every machine.

EX：Main machine cutting workpiece dimension=10.00mm、sub machine cutting dimension=9.97mm. However, there is a -0.03 error when cutting the same workpiece. Input 0.03 as compensation adjustment value

✎ Hint

＊ Please input the password to run the function. The password is included in the CD Rom.

＊ If workpiece thickness, material….etc changed too much, we recommend not to use this function.

Property of Kent USA
Do Not Reproduce

9.4Error Message

If the error message “NC Program Interference” appears after the graphic simulation, the system will display the following figure below. Please exclude the message and re-simulate.

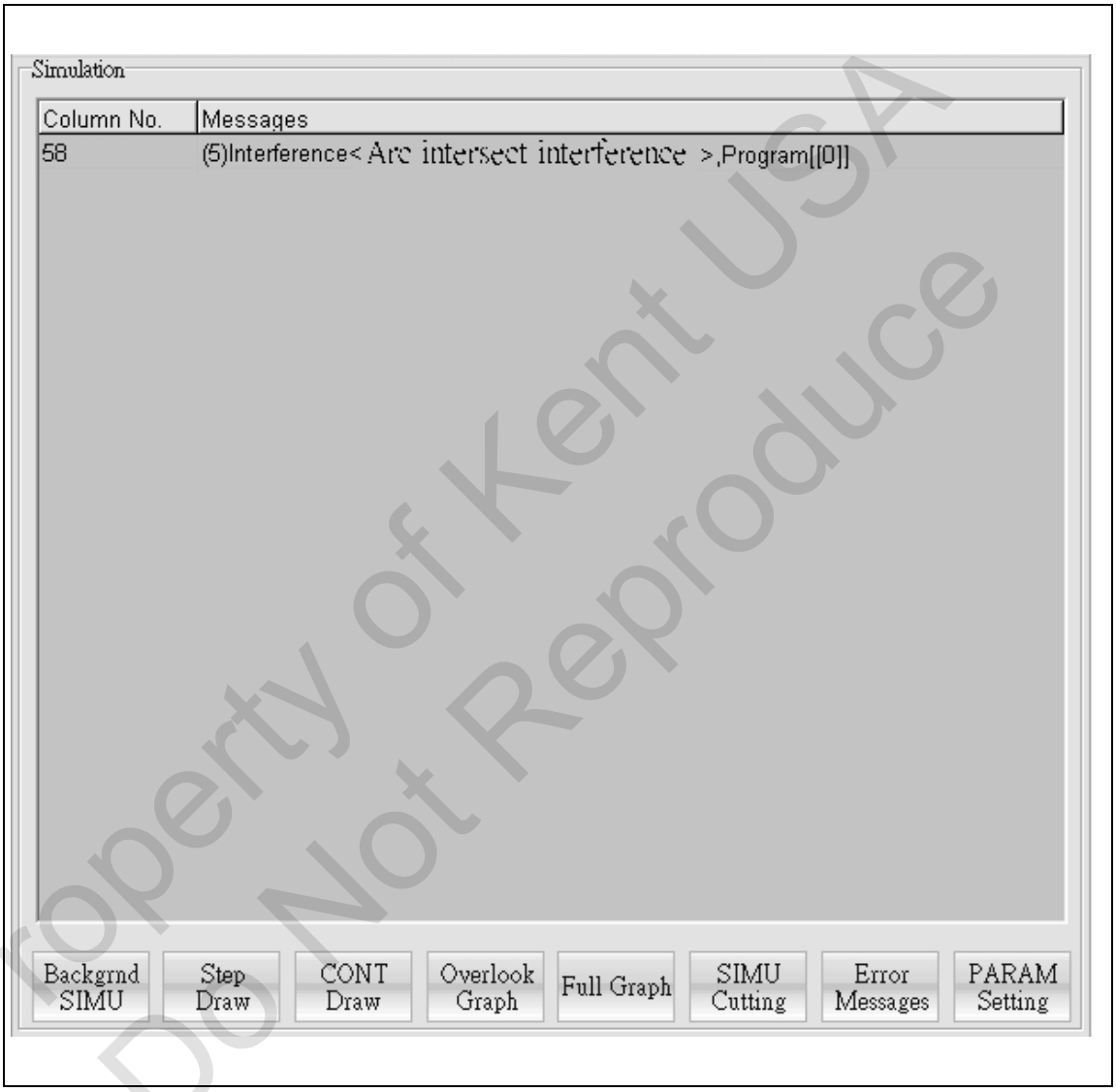

Property of Kent USA
Do Not Reproduce

（1） Message List：Search and correct the wrong NC program based on the list.

（2） Message：Let the operator notices the error and correct it. In the list, 「Program[0]」represents main program error. If there is a first level subprogram, [1] will be present. [2] is the second level subprogram and so on.

9.5 Cutting & Background simulation

Cutting Simulation：After the parameter is setup, it is necessary to check if there is interference or not and then input the condition to the NC Program. The system will enter the《Cutting Program》automatically.

Background Simulation：During machining, to operate other functions please select the function to run the simulation.

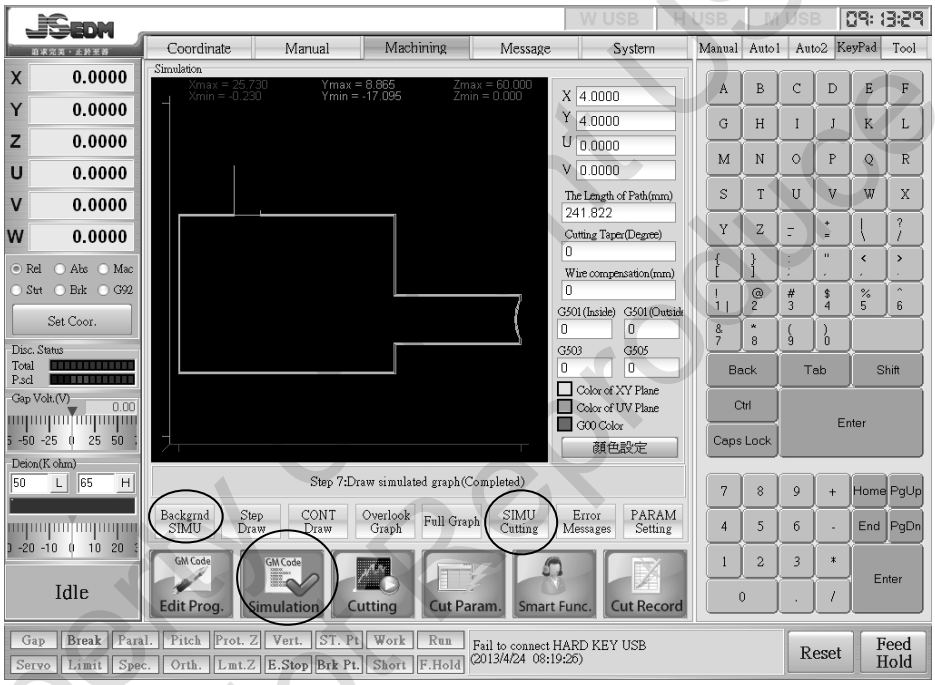

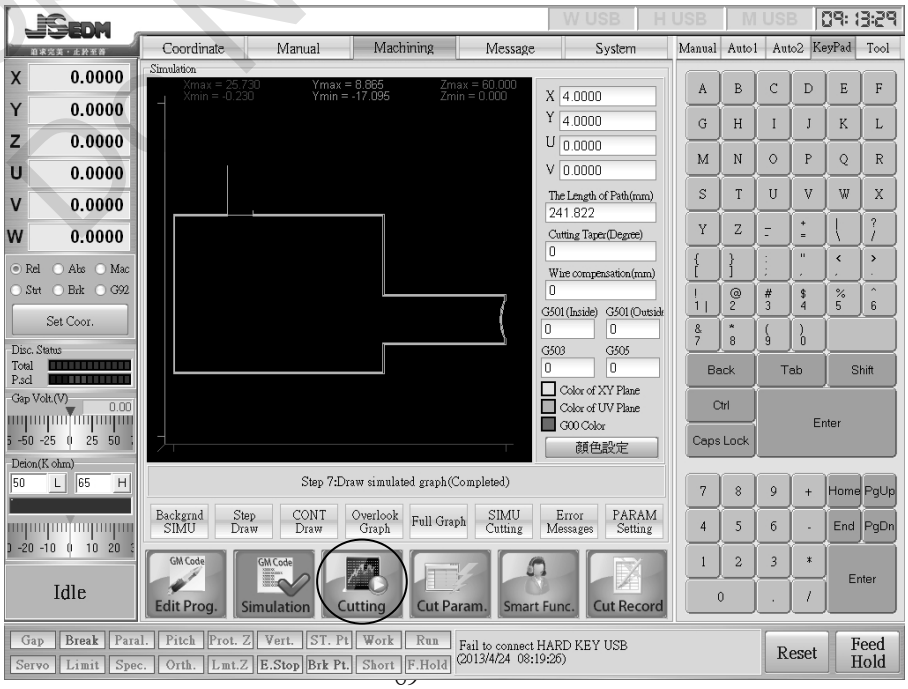

Property of KENT USA
Do Not Copy Or Distribute

9.6 Full & Overlook

Full：When moving or zooming the graph, to move the graph to the center press the button to resume to the initial status.

Zoom in

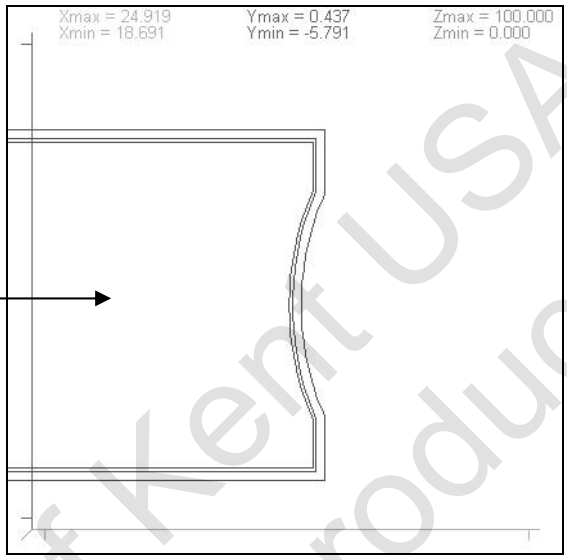

Select Full, the simulation graph will resume to the original size

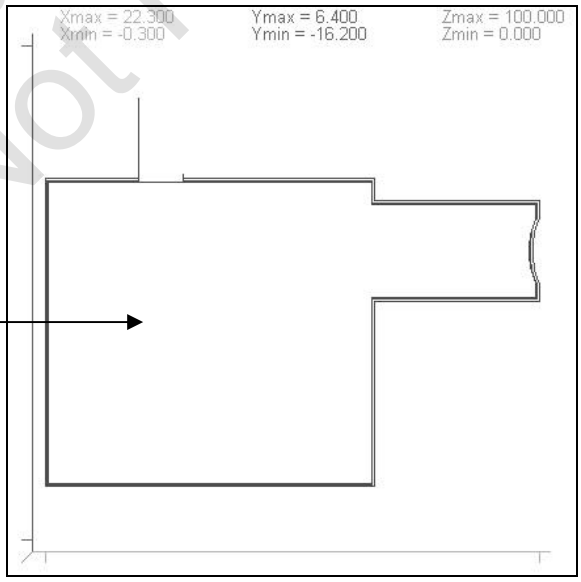

Property of Kent USA
Do Not Reproduce

Overlook：When the graph is rotating, in order to resume it to second dimension, press the button and restore to the initial status.

Rotate

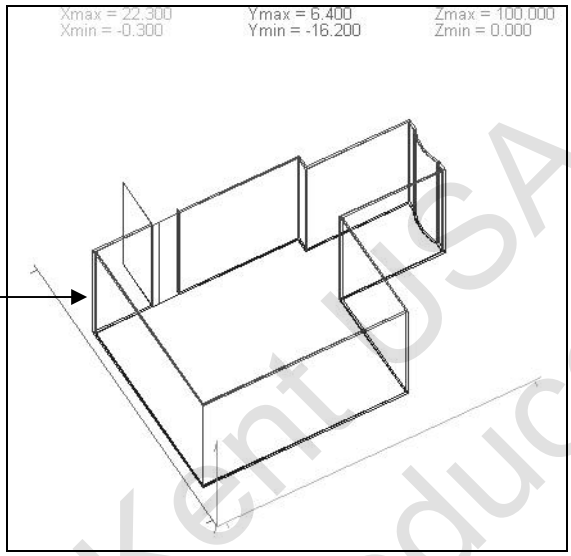

Press Overlook the simulation graph will resume to the original size.

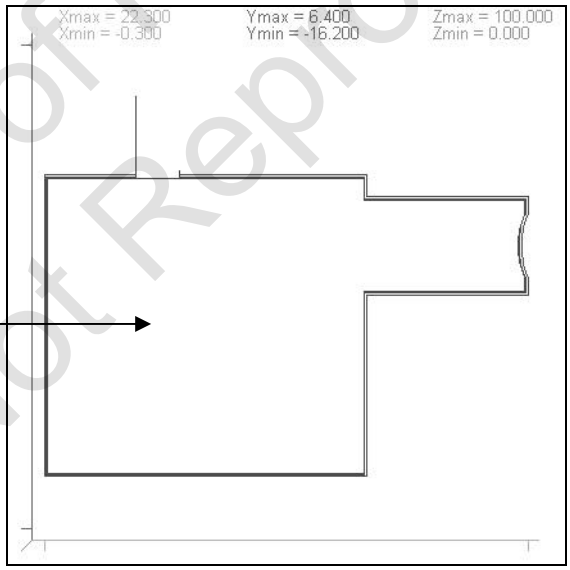

✐ Hint

＊ Area zoom in：Press Ctrl + right click the mouse, select the assign region. Move the mouse to zoom the area.

＊Graph zoom in：Move the mouse to the assign graph, right click the mouse without releasing it and then move the mouse to zoom the graph.

＊Graph rotate：Move the mouse and press the assign graph without releasing, move the wheel on the mouse to rotate the graph.

Property of Kent USA
Do Not Reproduce

9.7 Continuously Draw & Step Draw

Continuously Draw：Click CONT Draw then the graph simulation will start to operate. Time for every block can be setup under Parameter Setting "SI Draw time".

Step Draw：Each time Step Draw has been pressed, the system will only simulate one block of the graph. To complete the entire simulation, please press CONT Draw.

Property of Kent USA
Do Not Reproduce

10 EDM DATA Setting

EDM DATA selection is base on the material and thickness of workpiece, feed rate and surface finish.
The Data chart comes with machine can help the operator choose the suitable parameter for machining, and save it in the table.
Operator can also input the data base on his/her experience.

10.1 EDM DATA setting in MONITOR mode

At the Machining section under the【Hot Key】and click Auto1 to let the operator to set EDM DATA. Besides, operator can also use the mouse to adjust the EDM DATA.

（1） Use the keyboard to input the value.
（2） Use the arrow key【▲】、【▼】to adjust the value.
（3） Use the wheel on the mouse to adjust the value.
（4） Click the small box on the right, a key broad will come out. Adjust the value by pressing the keyboard or moving the scroll.
Figure show as below：

＊ To adjust the EDM DATA during the machining process, click Enter or right click the mouse, or the machining process will not match with new EDM value.
＊ Press Save Parameter to save the changed condition.

Property of Kent USA
Do Not Reproduce

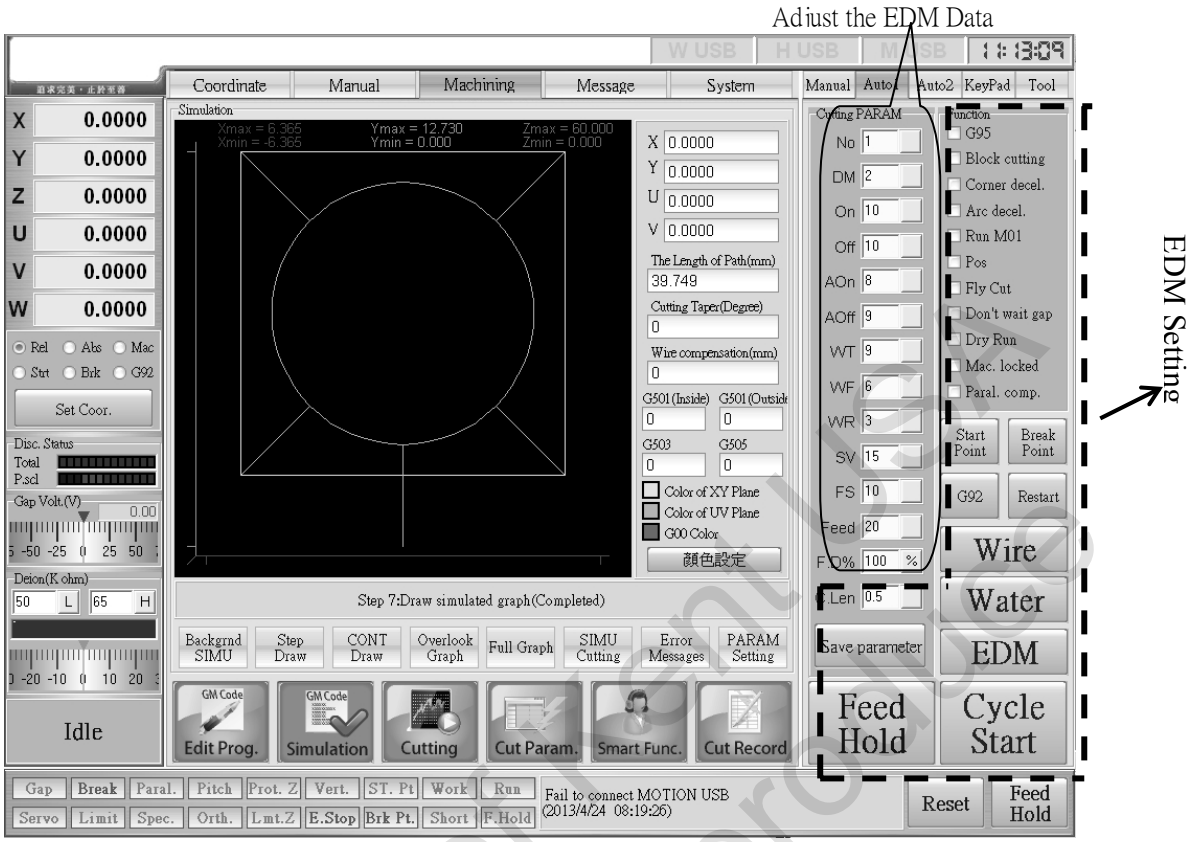

10.2 Processing parameters described conditions

（1）NO（Number）：

⇨ Assign a number for each EDM DATA and save to CNC.

⇨ Number between 0~9999

⇨ Call or save Data.

Call EDM DATA condition
Assigned number is 21 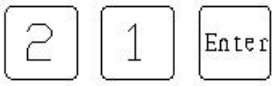

（2）DM（Skim Cut、OV Power、AC to DC Power）

Range：1~212

⇨ 001~004: Normal discharge circuit (1:80V,2:90V,3:100V,4:120V),AC Power。

⇨ 005~008: Normal discharge circuit (5:80V,6:90V,7:100V,8:120V),DC Power, negative

⇨ 009~016: Normal discharge circuit (9~16),90V AC Power

※ EDM DATA only sets for steel materials currently.

Property of Kent USA
Do Not Reproduce

⇨ 017~048: Refinement Loop，Skim power equal energy mode(ON) ，AC POWER(ON)
⇨ 049~080: Refinement Loop，Skim power equal energy mode (OFF)，AC POWER(ON)
⇨ 081~112: Refinement Loop，Skim power equal energy mode (ON)，
AC POWER(ON), negative
⇨ 113~144: Refinement Loop，Skim power equal energy mode (OFF)
AC POWER(OFF), negative
⇨ 145~176: Refinement Loop，Skim power equal energy mode (ON)
AC POWER(OFF), positive
⇨ 177~208: Refinement Loop，Skim power equal energy mode (OFF)
AC POWER(OFF), positive
⇨ 209~212: Super Refinement Loop，Skim power equal energy mode (OFF)，
AC POWER(ON)。※209~212 Not available recently

AC POWER	Equal Power		17~24	25~32	33~40	41~48
		OV Voltage	80V	90V	100V	120V
		Resistance	1~8parts	1~8 parts	1~8 parts	1~8 parts
AC POWER	Non Equal Power		49~56	57~64	65~72	73~80
		OV Voltage	80V	90V	100V	120V
		Resistance	1~8 parts	1~8 parts	1~8 parts	1~8 parts
DC POWER negative	Equal Power		81~88	89~96	97~104	105~112
		OV Voltage	80V	90V	100V	120V
		Resistance	1~8 parts	1~8 parts	1~8 parts	1~8 parts
DC POWER negative	Non Equal Power		113~120	121~128	129~136	137~144
		OV Voltage	80V	90V	100V	120V
		Resistance	1~8 parts	1~8 parts	1~8 parts	1~8 parts
DC POWER positive	Equal Power		145~152	153~160	161~168	169~176
		OV Voltage	80V	90V	100V	120V
		Resistance	1~8 parts	1~8 parts	1~8 parts	1~8 parts
DC POWER positive	Non Equal Power		177~184	185~192	193~200	201~208
		OV Voltage	80V	90V	100V	120V
		Resistance	1~8 parts	1~8 parts	1~8 parts	1~8 parts

※ Caution when exchanging DM,
The level of the resistance and the Anti- resistance is inversely proportional. Due to this reason, if the rougher the surface of cutting product is, the more you have to be careful when replacing the DM condition.

Property of Kent USA
Do Not Reproduce

（3）ON（ON TIME）

Range：1~24（AC POWER）

⇨ Sparking pulse width

⇨ The bigger ON time, the larger sparking pulse width. And the average current flow is increase

⇨ The more ON TIME will increase the cutting speed. On the other hand, it will cause the wire broken easily, rougher surface and larger sparking gap

（4）OFF（OFF TIME）

Range：8~50

⇨ Interval time between sparking pulses.

⇨ The bigger OFF Time, the larger interval time. And the average current flow is decreased.

（5）AON（ARC ON TIME）

Range：1~20（AC POWER）

⇨ When arc is detected during EDMing, controller will adjust the ON TIME to the assigned value.

⇨ When this value is increased, the cutting speed is increased too, but it will cause the wire broken easily.

⇨ The value should be lower than ON TIME to prevent broken wire.

（6）AOFF（ARC OFF TIME）

Range：8~50

⇨ When ARC is detected during EDMing. Controller will adjust the ARC OFF TIME to the assigned value

⇨ Increase this number can prevent broken wire, but it will reduce the cutting speed.

⇨This value should be higher than OFF TIME.

（7）WT（Wire Tension）

Range: 1~15

⇨ The flushing pressure will vibrate the cutting wire and affect the machining accuracy. To prevent wire vibration, increase the wire tension is necessary.

⇨ The higher WT value input, the better cutting accuracy. On the

Property of Kent USA
Do Not Reproduce

other hand, it will cause wire broken easily.

（8）WF（Wire Feed Rate）

Range: 1~15

⇨ Assign Wire Feed Rate.

⇨ Lower wire feed rate is suitable for thin workpiece. Higher rate is suitable for thick workpiece.

⇨ If the value is too low, the finish workpiece has different dimensions on upper and lower area.

（9）WR（Water Pressure）

Range: 0~7

⇨ Working fluid flush rate.

⇨ Working fluid is used to reduce the heat produced during EDMing and make the sparking stable.

⇨ The value of WR is proportional to the value of the fluid flush rate.

⇨Increase the flush rate will increase the cutting speed, but will reduce the accuracy.

（10）SV（Servo Voltage）

Range: 0~120

⇨ Reference data for assigned working feed rate.

⇨ If the actual servo voltage is smaller than the setting, it means the sparking is not stable.

⇨ The higher value will make the machining more stable, but it will reduce the cutting speed.

Gap Voltage (Actual voltage):

Gap voltage is the voltage between wire and electrode, then compare with servo voltage and determine the Servo Feed Rate. If the Gap Voltage drop to “0V”, it means it is under short circuit status

Property of Kent USA
Do Not Reproduce

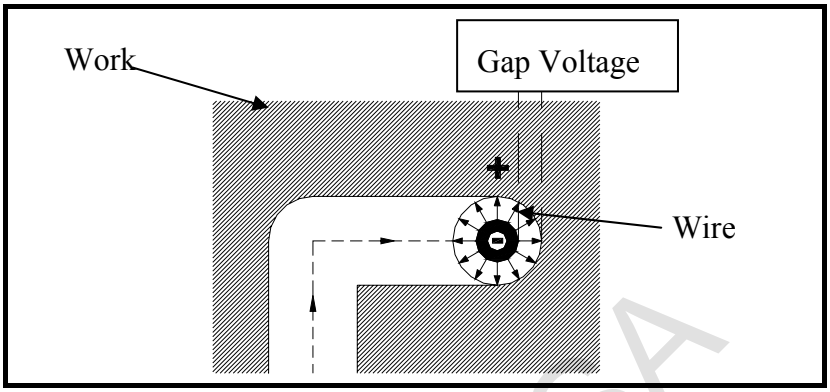

（13）FS（G95 sensibility）

Range：0~1000

⇨ Assign the working sensibility in G95

⇨ The higher value assigned, the more sensibility created.

（10）FEED（F value in G94）

Range：0~30

⇨ F value of G94 in new program can be re- assigned

⇨ This value can be worked with FEED%。

（12）FEED%　（Feed Rate）

Range：0~500

⇨ Assign the feed rate while EDMing

⇨ This value is assigned by G94 in NC program.

EX（1）：G94 F2.0

Default Value 90　Maximum Speed　1.80（mm/min）

Default Value 200　Maximum Speed　4.00（mm/min）

EX（2）：G94 F0.6

Default Value 75　Maximum Speed　0.4（mm/min）

Default Value 400　Maximum Speed　2.40（mm/min）

（13）C.LEN（Length of Corner Machining）

Range：0~5

⇨ Assign the length of corner machining.

Property of Kent USA
Do Not Reproduce

10.3 Processing Functions

（1）G95

⇨Assign G95 for machining.

⇨ The setting can be modified in program.

（2）Single Processing

⇨ When the feature is running, it will only execute a single processing. To instruct other machining, pause the function and then press the Start button.

（3）CORNER (Corner Machining)

⇨ Assign Corner Machining function ON/OFF.

（4）ACR (Arc Machining)

⇨ Assign Arc Machining function ON/OFF

（5）Assign M01

⇨ When the wire travels to M01, the machining process will stop automatically.

（6）POS

⇨During the machining process, SHORT light will appear when wire contact to the workpiece, hence the machine will stop. To continue the machining process, press 《POS》and then select the 《Start》button.

（7）Fly Cut

⇨ When it is necessary for the operator to start machining from the edge of the workpiece, flushing issue will occur at this time. The upper flush lid is not able to cover the upper surface of the workpiece completely; hence water pressure cannot be too high. Due to this reason, low water pressure, discharge energy and machining speed is required during the machining. When the upper flush lid has covered the upper surface of workpiece completely, all the conditions can go back to normal. However, this causes a trouble for the operator by changing the working condition very often. Fly Cut is a function which sets a range for the sparking parameter and helps the operator to save lots of trouble.

Property of Kent USA
Do Not Reproduce

（8）Gap Voltage Detect System

⇨To avoid short circuit, “Gap Voltage Detect System” will pause the machining process when the gap voltage is shortage.

（9）Dry Run

⇨This feature is used to simulate the shape of the workpiece created by the graphing program. Cutting process will not run at this time. Dry Run needs to be canceled in order to start the machining.

（10）Mechanical Lock

⇨ This function only allows the computer program to run at this time. (Mechanical Processing will not operate.)

The purpose is to check the program itself. During the checking process, test the program by changing the value of the Absolute coordinates (under [Position], at the top of the screen).

※the value of Mechanical Coordinate should be fixed

（11）Parallel Compensation

⇨ Assign Parallel Compensation function ON/OFF

（12）Z axis Rise

⇨ When the machining is completed, select this key, the Z axis will rise to the assign height.

※Go to《 Auto2 》to assign the rising distance of Z axis.

（13）Reset

⇨ When selecting the Reset Key, everything will restart from the beginning.

（14）Starting Point

⇨Return to the starting point.

（15）Breaking Point

⇨Return to the Breaking point.

（16）G92

⇨Return to the last G92 point.

Property of Kent USA
Do Not Reproduce

（17）Restart

⇨When power failure during the machining process, the monitor will back to the main manual which show《WIRE》、《WATER》、《EDM》. Press the restart button, the machine will continue at the part it stops.

（18）WIRE

⇨ Press the key, the machine will start to feed the wire and increase the tension of the wire. The instruction will stop when pressing the key again.

（19）WATER

⇨Press the key, the Working Fluid will be sent. The instruction will stop when pressing the key again. Water pressure can adjust through the button on the water system panel.

（20）EDM

⇨This key represents Power ON. The machine is standing by at this time, however voltage won't pass through the cutting wire in this moment.

（21）Start

⇨Press the key, the machine will begin to machining.

（22）Pause

⇨Press the key, the machine will stop to work at this time.

Property of Kent USA
Do Not Reproduce

10.4 Factors effect working efficiency

（1） Wire Tension

Different material of wire has different wire tension. For higher accuracy machining, higher tension wire is required. If the higher wire tension affects the cutting rate, the wire broken easily. On the other hand, lower wire tension will cause short circuit. High tension is suitable for lower current machining (small ON TIME) and Low tension is suitable for higher current (large ON TIME).

（2）Wire Feed Rate

Wire will wear out and become thinner because of the high temperature produced by EDMing. For thick workpiece, the wire feed rate should be increased, otherwise the wire will be broken easily. Even though the wire is not broken, it will cause the sized different on upper and lower parts of workpiece.

（3）Working Fluid

① Water resistance: The water used for Wire EDM should be through ION- exchanger and become pure water. The water resistance is between10K ~ 100KΩ cm. The figure is shown below.

For tool steel machining, water resistance should set between 10~20 KΩ cm. For Carbide or Mn Alloy steel, water resistance should be 20K~ 100 KΩ cm. If the condition is not matched, it might cause the sparking unstable or rougher finish.

Property of Kent USA
Do Not Reproduce

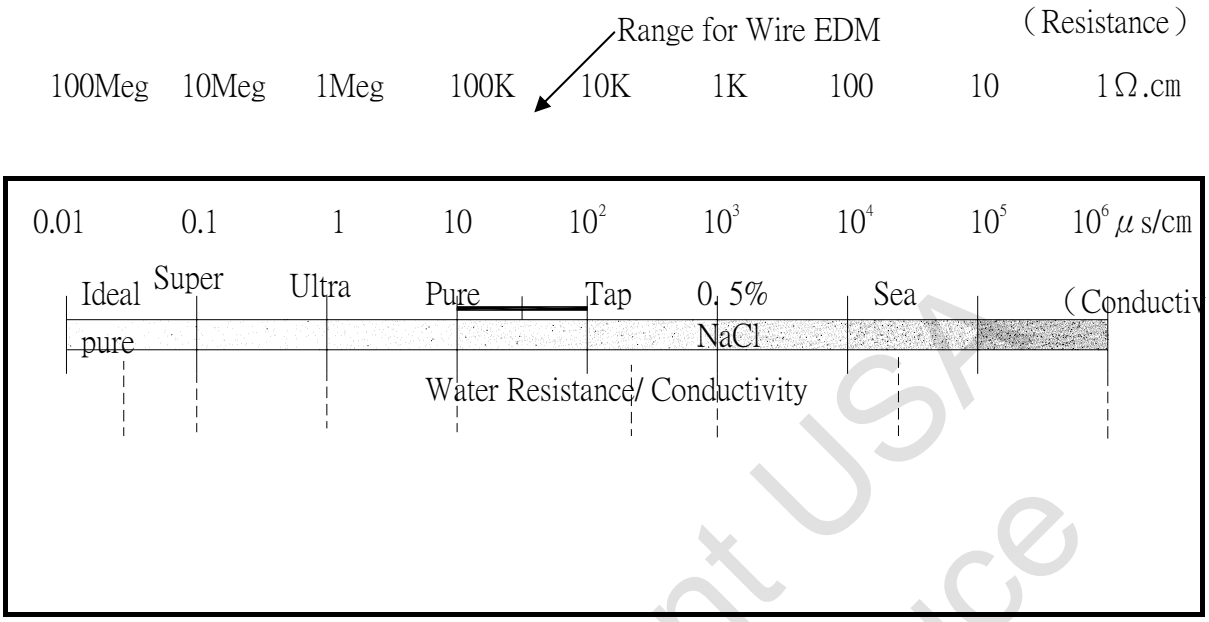

② Flush Flow Rate: Flush Flow Rate plays an important role for the cutting process. General speaking, machine can have higher cutting efficiency when flush flow rate is increased.

(1) But end of the machining
(2) Skim cut
(3) Workpiece thickness changed

③ Working fluid will be vaporized in water tank. Water should be added or replaced if the water level is too low or too dirty. (Order of water quality: Distilled water, Tap water, groundwater)

Property of Kent USA
Do Not Reproduce

10.5 Parameter Setting

10.5.1 Parameter Setting

This function helps operator to find a suitable sparking parameter or the current processing program.

（1） Press《Smart func.》under Machining Mode, so that the parameter can be adjusted.

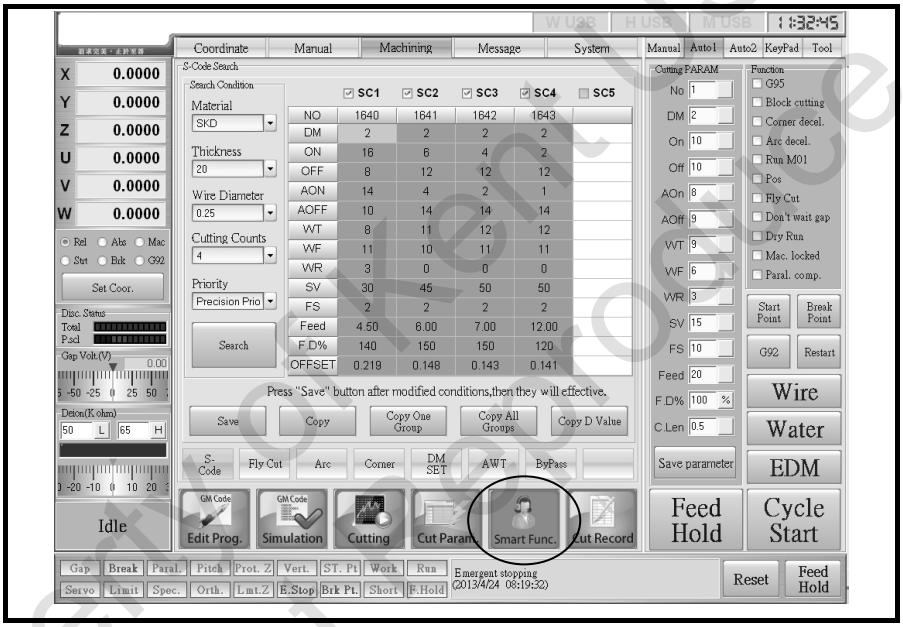

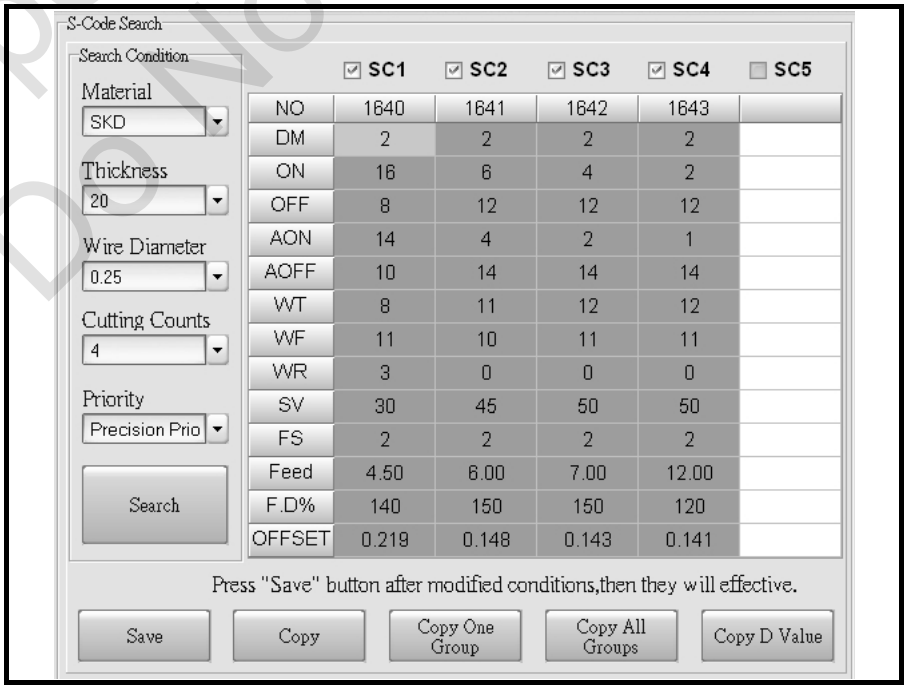

Property of Kent USA
Do Not Reproduce

（2）Search Condition：Search condition including workpiece material, thickness, wire diameter, Machining tool time and other conditions. These conditions need to be setup by the operator.

（3）Press Search, to find a suitable sparking parameter.

（4）Choose the needed machining condition, then select Copy . A window will appear, type in the group number and then check SC1~SC5. SC1 will be imported to No. 53, SC2→NO.54、SC3→NO.55、SC4→NO.56、SC5→NO.56.

Shown as below：

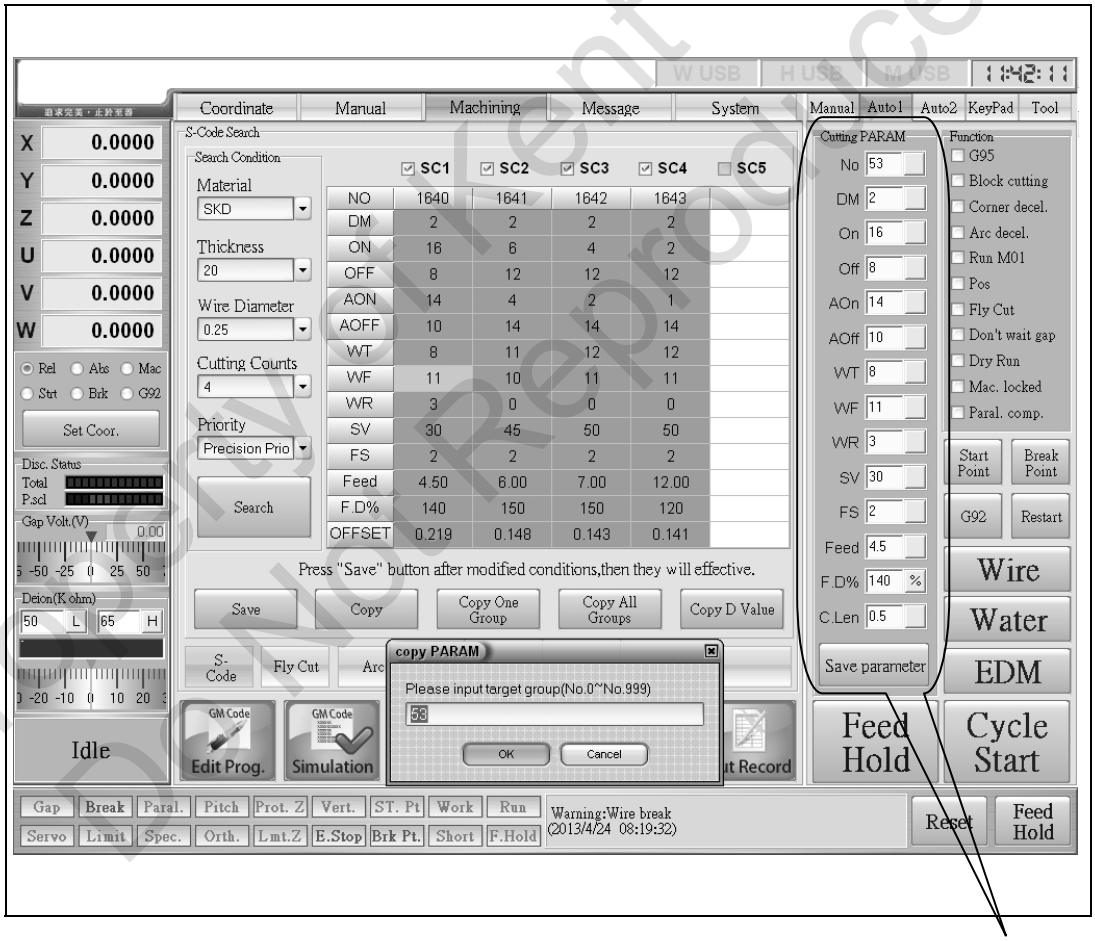

Find the machining parameter by using parameter setting and then sent it to machining monitor screen.

（4）Utilized Copy, then select one of the options from SC1~SC5, otherwise the message “Select one parameter group only” will appear. When SC is setup successfully, SC condition will be sent to《Auto1》automatically.

Property of Kent USA
Do Not Reproduce

（5）Utilize Copy All, the entire SC1~SC5 condition will be sent to NO.995~999 doesn't matter if SC1~SC5 is checked or not. Setup the S code in order to run the condition through NC program.

（6）Press《D value export》, to sent the OFFSET value to the D value which being used during the G41 or G42 machining.

10.5.2 Fly Cut Setting

（1）To setup the Fly Cut, press「Fly Cut」under the Condition Setting.

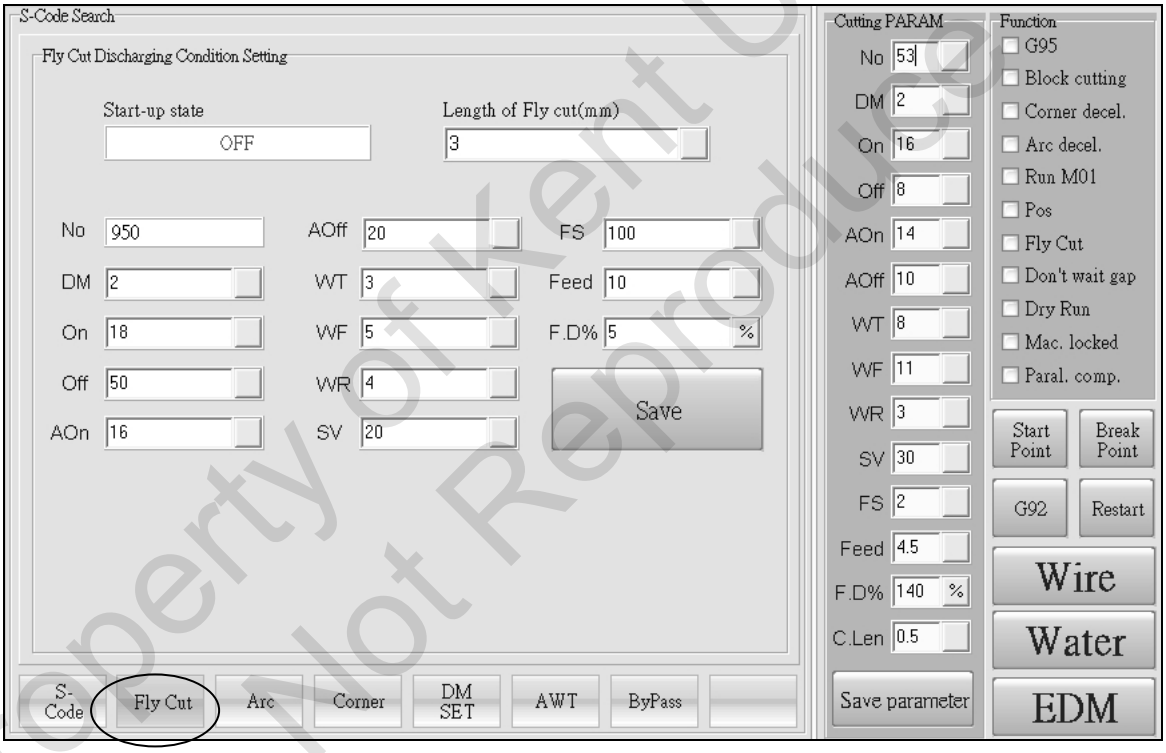

（2）Fly Cut condition setup:

1. Setup the Fly Cut length (approx. Radius of flush lid)
2. Setup the Fly Cut sparking parameter NO.950 (The sparking parameter No. cannot be changed.) then press Save Parameter
3. Click 『Fly Cut』under 《Auto1》, Status will change from Disable to Enable which means the function is ready to work.

Property of Kent USA
Do Not Reproduce

10.5.3 Arc Control Setting

Our machining provides Arc and Corner Control setting to avoid corner gets deformed. While the function is operating, CNC will check the setup conditions and adjust the sparking condition of the corner and arc machining automatically.

（1）Press Arc to enter the mode.

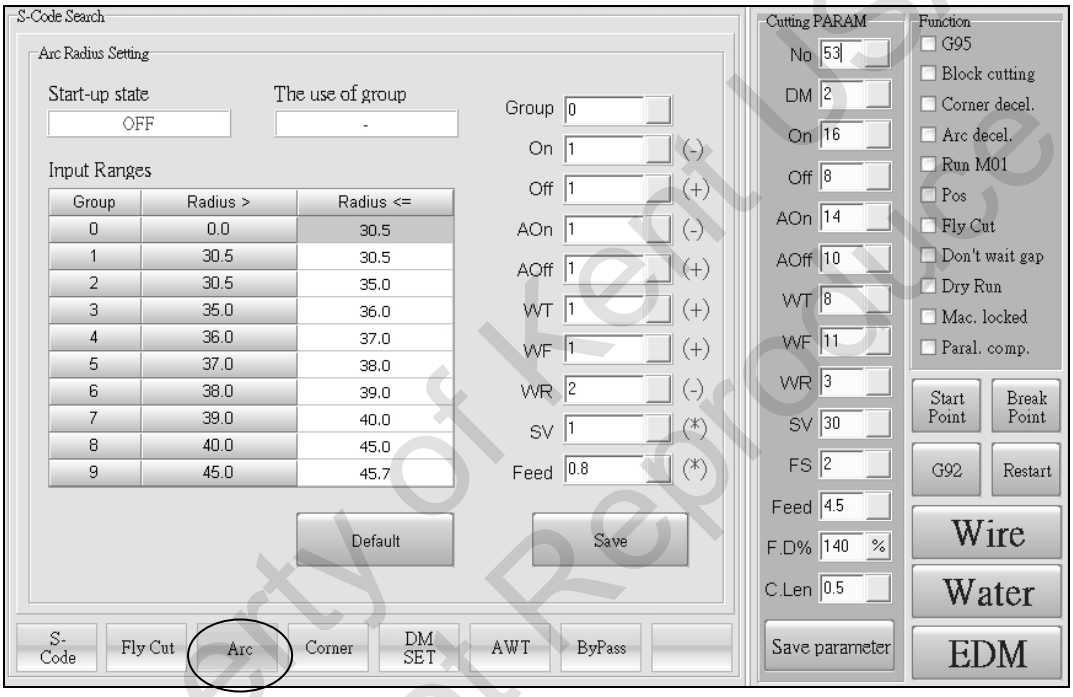

（2）Arc condition setting：

1. Machining Condition setup：Setup 10 groups of parameter NO.960~NO.969. Press Save Parameter to save the parameter into the table below.

NC Program S Code / Radius	－ ON（%）	－ AON（%）	＋ WR（Section）	－ WT（Section）
0.0＜r（radius）≦0.3 ㎜	60	60	2	2
0.3＜r（radius）≦1.0 ㎜	50	50	1	1
1.0＜r（radius）≦2.5 ㎜	40	40	0	0
2.5＜r（radius）≦5.0 ㎜	30	30	0	0

Property of Kent USA
Do Not Reproduce

2. Arc machining range：r 0.1~5.0mm。Arrange the minimum r with machining parameter NO. 960. When 『Radius≦』 setup is completed, the next group『Radius >』will be produced automatically.

3. There are 2 ways to operate Arc Deceleration：
   Method I：Before starting the machining, click『Arc decelerate』under 《Auto1》. The entire setup radius in NC Program will start the Arc decelerate process.

   Method II：In S code, set CS ON to run the Arc deceleration. In addition, 『Arc decelerate』under《Auto1》will click on automatically. On the other hand, 『Arc decelerate』will be canceled if CS is OFF.

10.5.4 Corner Control Setting

（1）Press Corner to enter the mode.

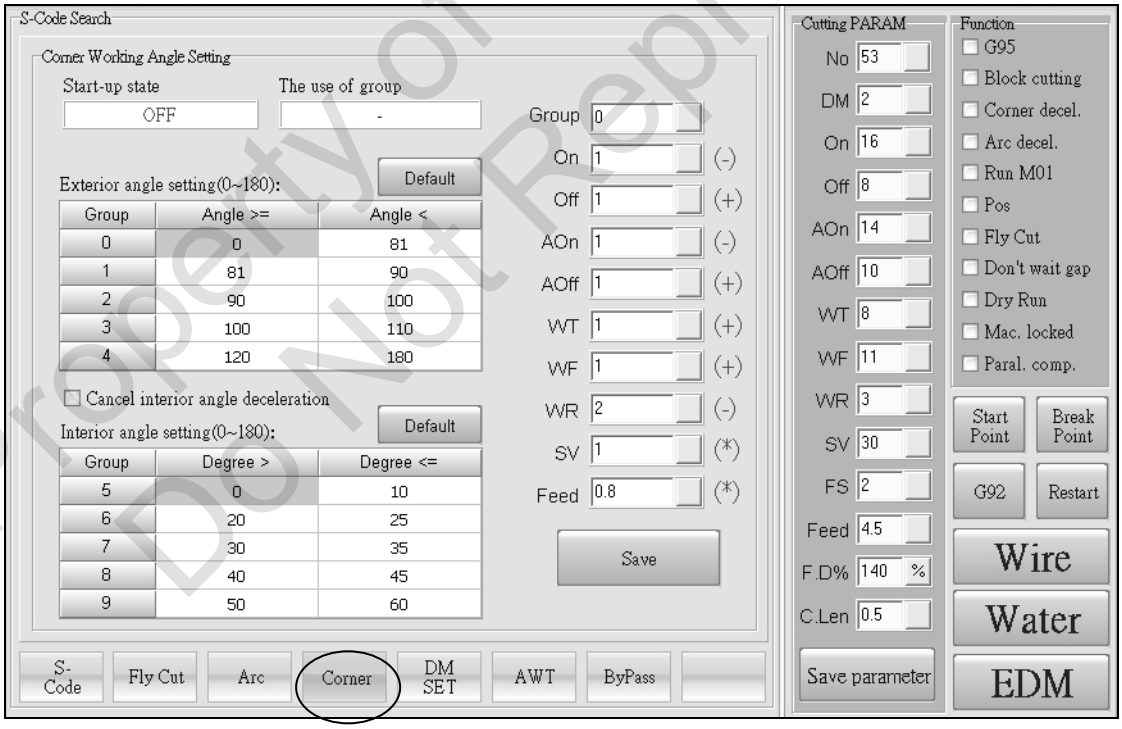

（2）Corner Condition Setting：
Machining Condition Setup：Setup 10 groups of parameter NO.970~NO.979. Press Save Parameter to save the parameter into the table below.

Property of Kent USA
Do Not Reproduce

NC Program S Code / Radius	－ ON （%）	－ AON （%）	＋ WR （Section）	－ WT （Section）
0＜deg≦3 ㎜	60	60	2	2
3＜deg≦12 ㎜	50	50	1	1
12＜deg≦35 ㎜	40	40	0	0
35＜deg≦110 ㎜	30	30	0	0

1. Corner machining range 0~180° (Exterior and Interior Angle)：

   Arrange the minimum exterior angle to machining parameter NO. 970 . When『Angle≦』is setup completed, the next group 『Angle>』needs to be setup manually.

   Arrange the minimum interior angle to machining parameter NO. 975 . When『Angle≦』is setup completed, the next group 『Angle>』needs to be setup manually.

3. 2 ways to operate Corner deceleration：

   Method I：Before starting the machining, click『Corner decelerate』under 《Auto1》. The entire setup radius in NC Program will start the Corner decelerate process.

   Method II：In S code, set CS ON to run the Corner deceleration. In addition,『Corner decelerate』under《Auto1》will click on automatically. On the other hand, 『Corner decelerate』will be canceled if CS is OFF.

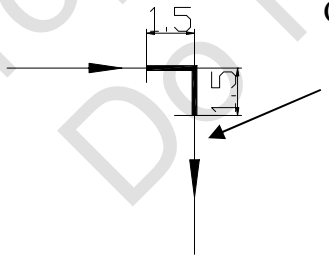

Corner Machining

The angle of this figure is 90°, 1.5 ㎜ is the length of both sides corner. The length is shown on the sparking parameter C LEN=1.5

10.5.5 DM SET

This feature is used for the manufacturer to adjust the sparking parameters, the user is not able to operate it.

Property of Kent USA
Do Not Reproduce

10.6 Cut Parameter

（1）Press《Sparking Parameter》under【AUTO】to enter the mode.

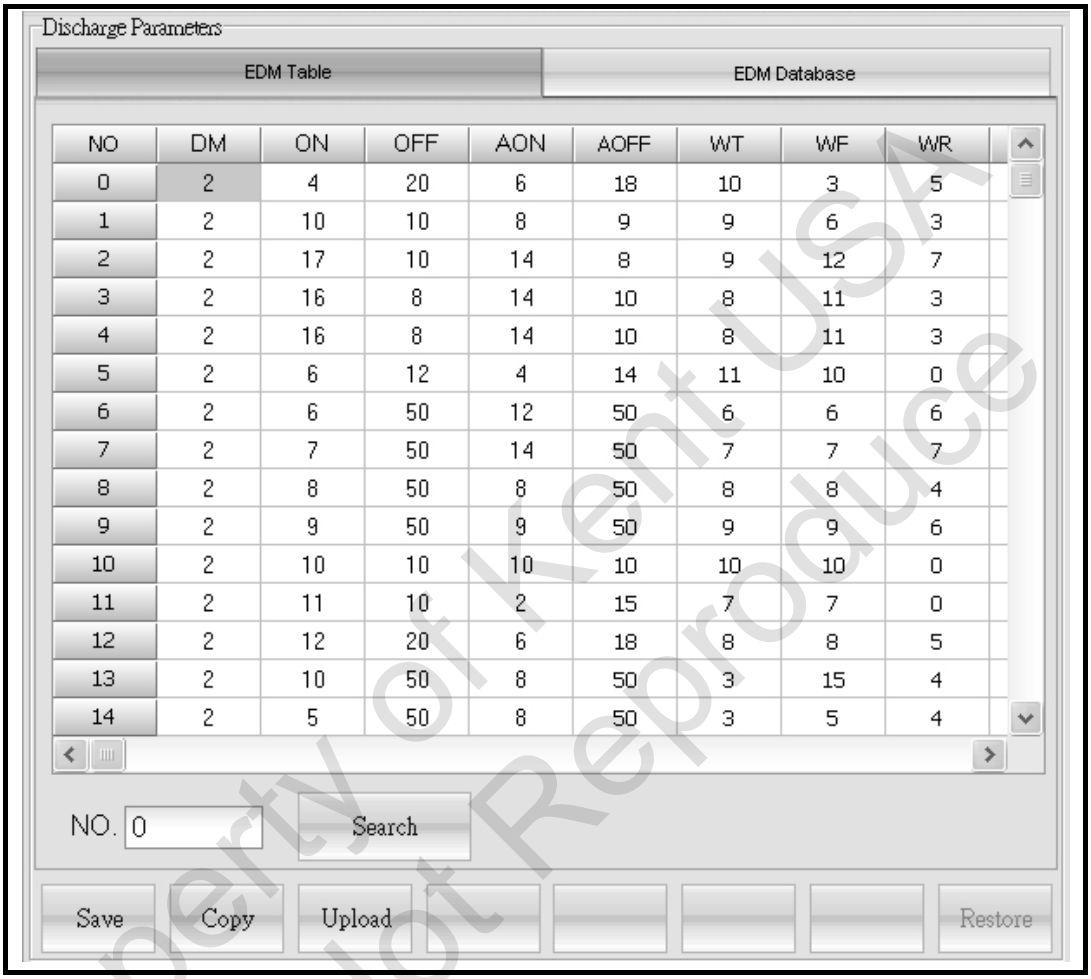

NO	DM	ON	OFF	AON	AOFF	WT	WF	WR
0	2	4	20	6	18	10	3	5
1	2	10	10	8	9	9	6	3
2	2	17	10	14	8	9	12	7
3	2	16	8	14	10	8	11	3
4	2	16	8	14	10	8	11	3
5	2	6	12	4	14	11	10	0
6	2	6	50	12	50	6	6	6
7	2	7	50	14	50	7	7	7
8	2	8	50	8	50	8	8	4
9	2	9	50	9	50	9	9	6
10	2	10	10	10	10	10	10	0
11	2	11	10	2	15	7	7	0
12	2	12	20	6	18	8	8	5
13	2	10	50	8	50	3	15	4
14	2	5	50	8	50	3	5	4

✎ Hint

Under《Sparking Parameter》, press《↑》,《↓》,《PgUp》,《PgDn》, mouse, or 「Search」etc. in order to change the sparking parameter.

(2)When modify the《Sparking Parameter》, move the light bar to the assign condition. Press Enter to key in the value and press Enter again to complete the procedure.

Property of Kent USA
Do Not Reproduce

（3）User Parameter Archive

When the modification of sparking condition is completed, press Save so that the data can still be used next time.

（4）User Parameter Upload

Move the light bar to the assign sparking parameter and then press Upload to send the data to the recent Auto Screen.

（5）Sparking Parameter saved

Setup the sparking parameter on the Auto Screen, and then press《Save Parameter》to save the parameter into the data table.

（6）Cover User Parameter

Move the light bar to the assign sparking condition and then press Copy, a window will appear. Input the NO. of the parameter and press OK.

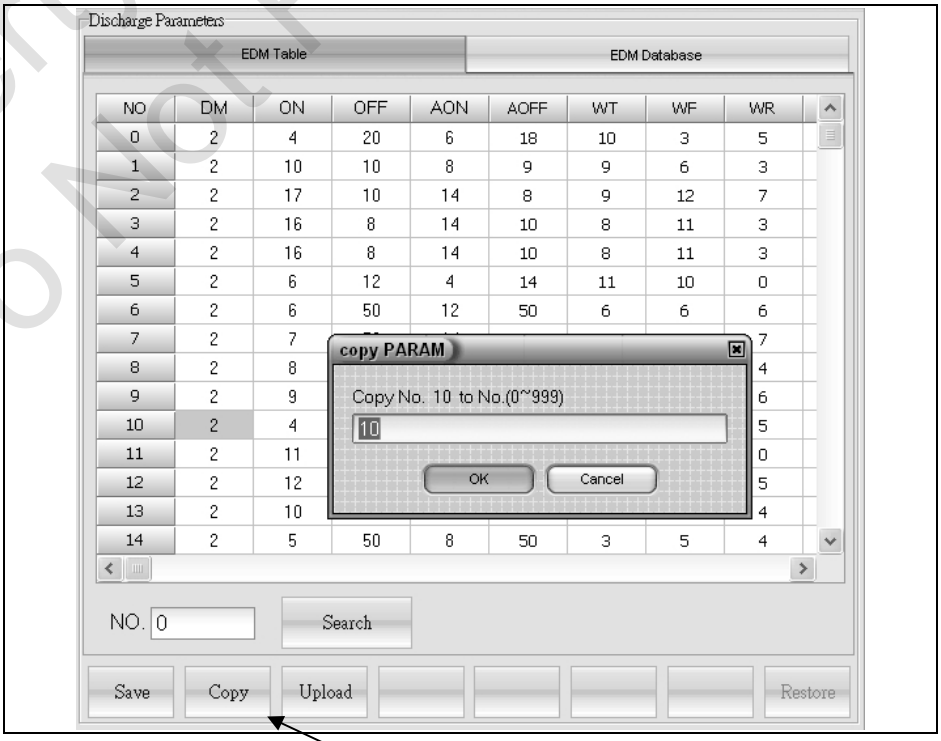

Press Copy

Property of Kent USA
Do Not Reproduce

10.7 Cut Recrod

Press《Cutting history》under【Machining】to enter the mode.
Two types of History display mode.

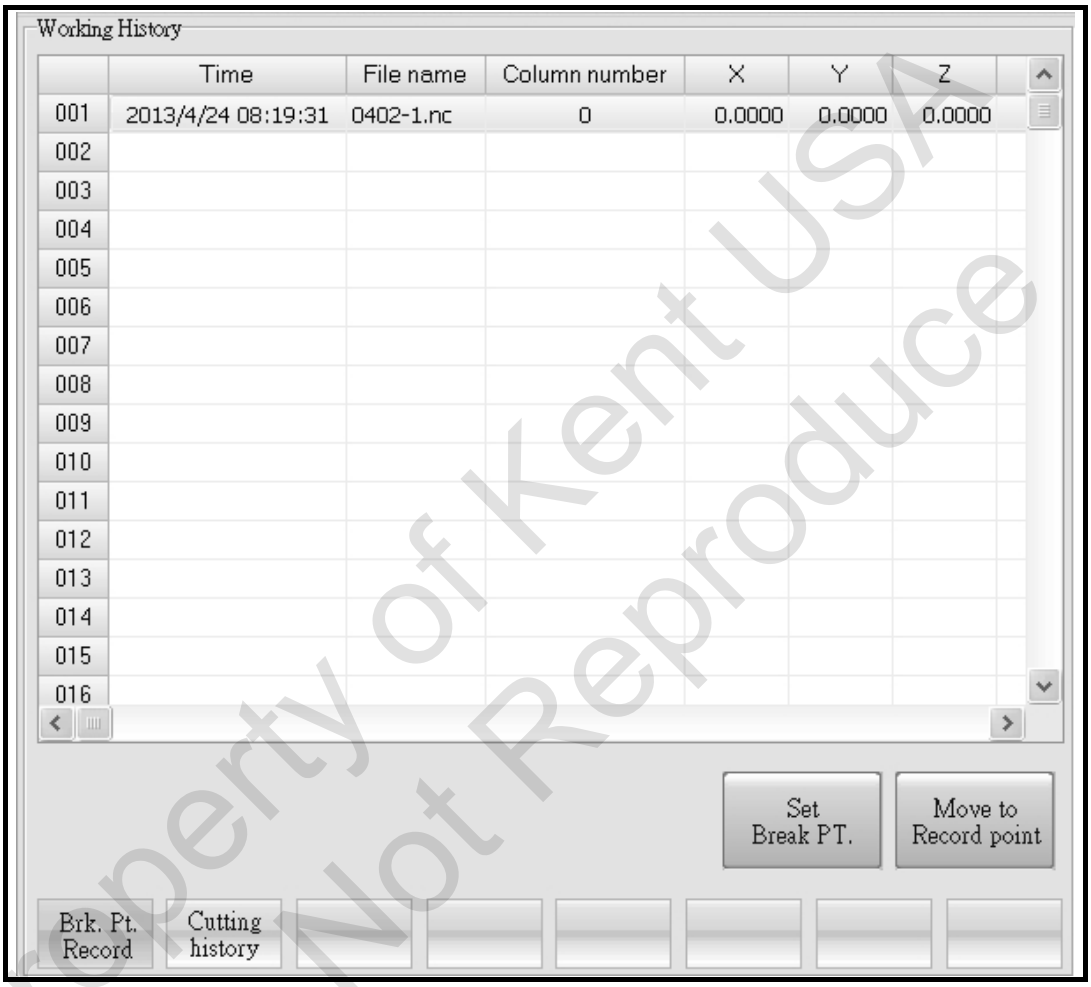

Property of Kent USA
Do Not Reproduce

10.7.1 Brk. Pt. Record

（1）Broken Wire Point History list

1.“Broken Wire Point History list” records 100 Broken wire Point History. 001represents the last broken wire point and 100 stands for the first broken wire point. The record will update automatically.

2. To return to any broken wire point, move the light bar to the assign value and press Set Break PT. The system will set the point as the broken wire point.

Ex I ：1. Operate O9960program cut, record the 3 broken wire point coordinates during the operation.

2. To set the first broken point as the current broken point, machining program needs to be reset. Next move the light bar to 003 and then press Set Broken PT.. Start the Broken Wire Point return function, the machine will move to the first broken point position.

3. Press 《Wire》、《Water》、《EDM》、《Restart》 Machining position will start from the first broken point.

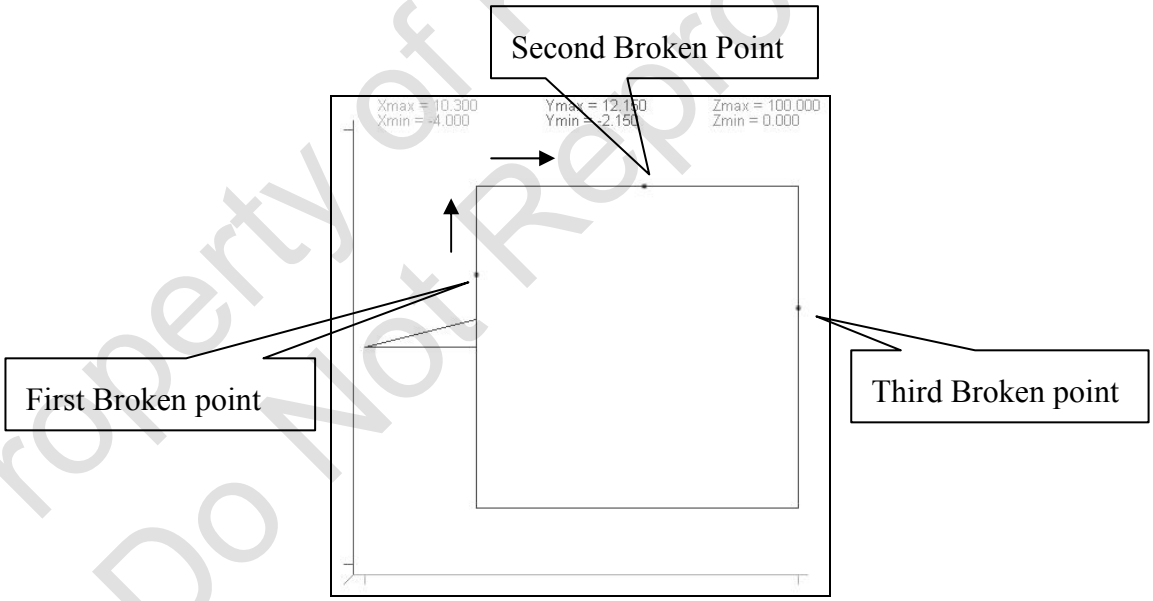

! Note

To recall the original program, the content of parameter setting has to be same as the previous setup. Otherwise it may cause the damage of workpiece.

（2）Move to Record point

Based on the workpiece requirement to setup the broken point.

! Note

When returning to different broken point, be caution of the height of the Z axis needs to be taller than the height of the work table.

Property of Kent USA
Do Not Reproduce

10.7.2 Record

（1）Under【Machining】screen, press《Cut Record》and then select 「Cutting history」to enter the mode.

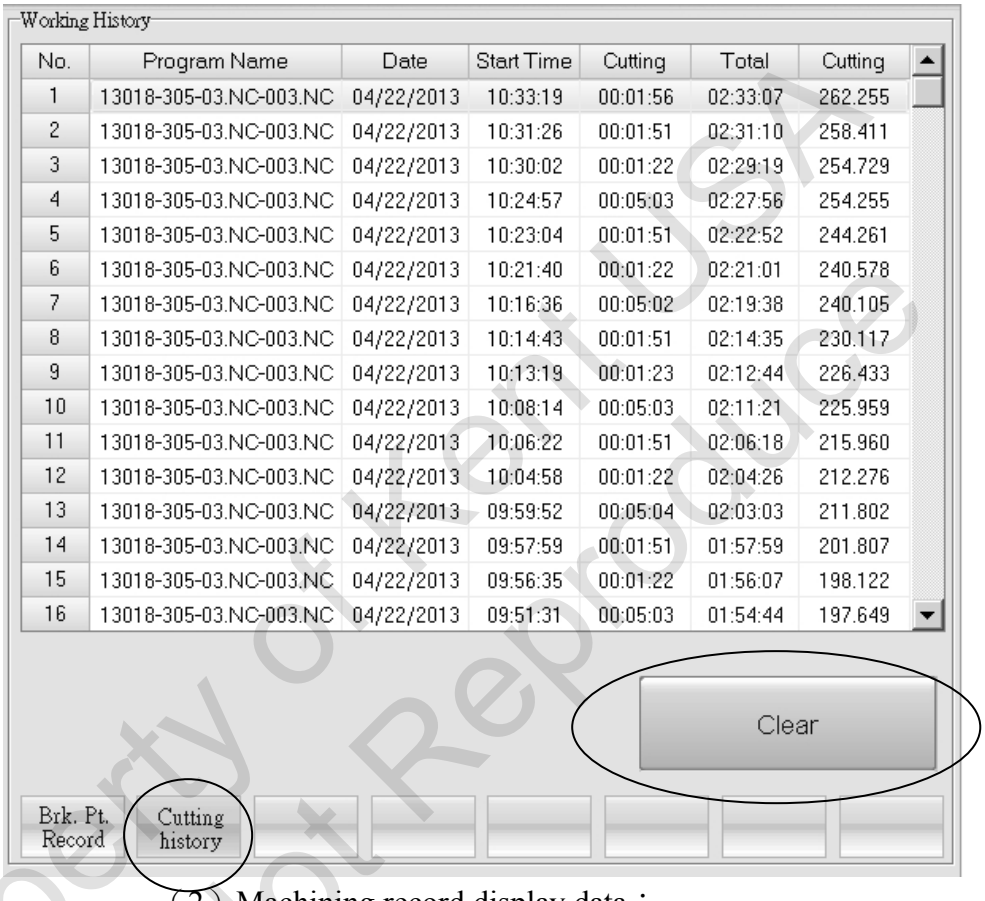

No.	Program Name	Date	Start Time	Cutting	Total	Cutting
1	13018-305-03.NC-003.NC	04/22/2013	10:33:19	00:01:56	02:33:07	262.255
2	13018-305-03.NC-003.NC	04/22/2013	10:31:26	00:01:51	02:31:10	258.411
3	13018-305-03.NC-003.NC	04/22/2013	10:30:02	00:01:22	02:29:19	254.729
4	13018-305-03.NC-003.NC	04/22/2013	10:24:57	00:05:03	02:27:56	254.255
5	13018-305-03.NC-003.NC	04/22/2013	10:23:04	00:01:51	02:22:52	244.261
6	13018-305-03.NC-003.NC	04/22/2013	10:21:40	00:01:22	02:21:01	240.578
7	13018-305-03.NC-003.NC	04/22/2013	10:16:36	00:05:02	02:19:38	240.105
8	13018-305-03.NC-003.NC	04/22/2013	10:14:43	00:01:51	02:14:35	230.117
9	13018-305-03.NC-003.NC	04/22/2013	10:13:19	00:01:23	02:12:44	226.433
10	13018-305-03.NC-003.NC	04/22/2013	10:08:14	00:05:03	02:11:21	225.959
11	13018-305-03.NC-003.NC	04/22/2013	10:06:22	00:01:51	02:06:18	215.960
12	13018-305-03.NC-003.NC	04/22/2013	10:04:58	00:01:22	02:04:26	212.276
13	13018-305-03.NC-003.NC	04/22/2013	09:59:52	00:05:04	02:03:03	211.802
14	13018-305-03.NC-003.NC	04/22/2013	09:57:59	00:01:51	01:57:59	201.807
15	13018-305-03.NC-003.NC	04/22/2013	09:56:35	00:01:22	01:56:07	198.122
16	13018-305-03.NC-003.NC	04/22/2013	09:51:31	00:05:03	01:54:44	197.649

（2）Machining record display data：

1. Work number：The number increases from number 1. Press《START》to start or pause the machining. Each time when pressing the《START》button, the number will increase by 1.
2. Program name：Name of Processing Program.
3. Date：Date of machining.
4. Starting time：Start machining time.
5. Machining time：Display the Start and Stop time of the machining. Machining hold including M02 pause and machining pause.
6. Cumulative time： Total time of machining.
7. Machining length：Display single machining length.

Property of Kent USA
Do Not Reproduce

（3）Press “Clear ” to delete all the data.

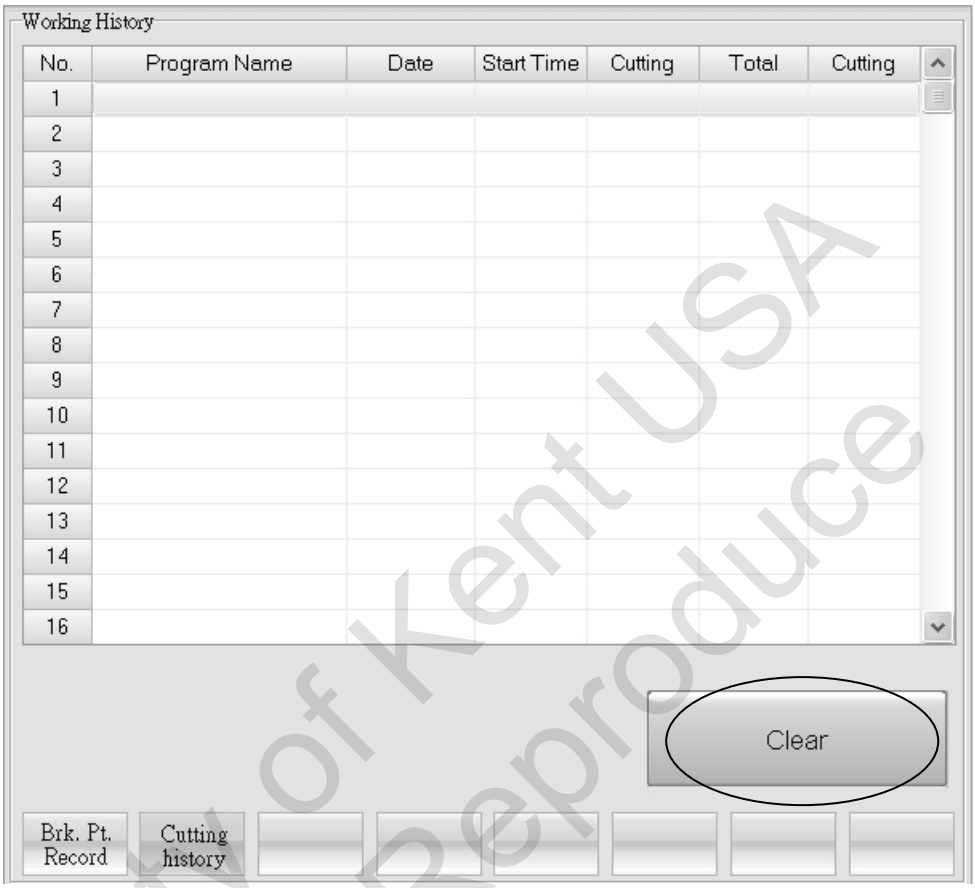

Property of Kent USA
Do Not Reproduce

11 Cutting Wire Position Adjustment

Operator can use the functions in【Manual Mode】to do Cutting Wire position Adjustment

Manual Mode provides the positioning function for operator to find the position to Top surface, center of circle hold and center of workpiece.

① Probe the surface of workpiece: Auto EDGE Find

②Probe the center hole: Center hole position (Find center)

③ Center of workpiece: Find the slot

◎ Set up the wire tension and feed rate before Auto Positioning.

Wire Dia.	Wire Tension（g）	Wire feed Rate
ψ0.10	5（aprox. 500g）	5
ψ0.15	8（aprox.1000g）	5
ψ0.20	9（aprox.1300g）	5
ψ0.25	13（aprox.1700g）	5
ψ0.30	14（aprox.2100g）	5

◎ Be sure there is no dust, rust and bur on the workpiece before Auto Positioning

→Use clothes or millstone to clean the dust, rust or bur.

◎ Adjust the Vertical position before Auto position

→If the vertical position shifted, the Auto Position function might not work properly

◎ Set the Z axis to the match working height.

→If the height on Z axis and on EDMing are different, it might affect the accuracy of positioning

◎ the area for positioning should be dry surface.

→If there is water on the Positioning Surface, it might cause the Positioning not accurate.

Property of Kent USA
Do Not Reproduce

◎ Enter【Manual】Mode

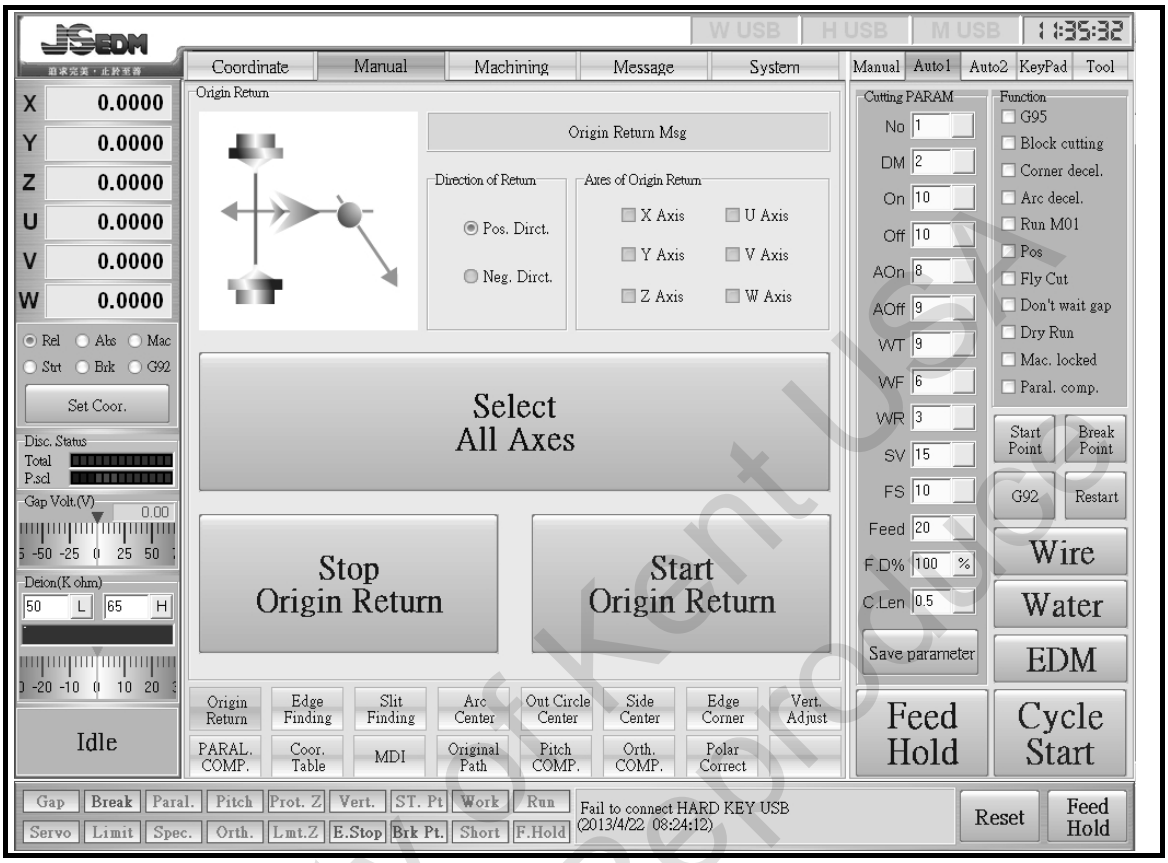

11.1 Take one corner of workpiece as Reference Point

EX：Find the position in start hole

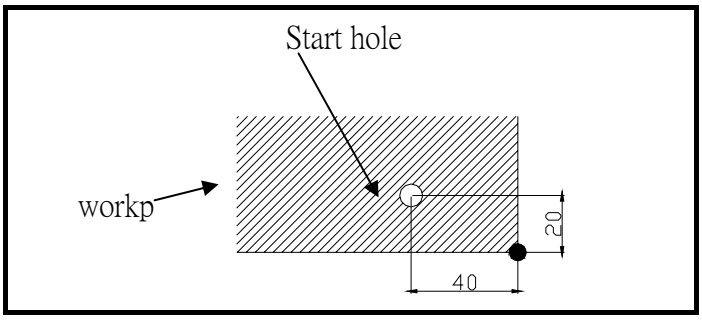

Property of Kent USA
Do Not Reproduce

（1）Move the wire close to workpiece.

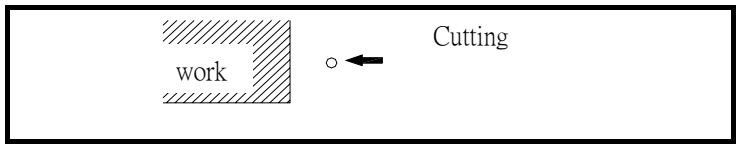

《JOG》《－X》

（2）Select《Edge》, Under【Manual】.

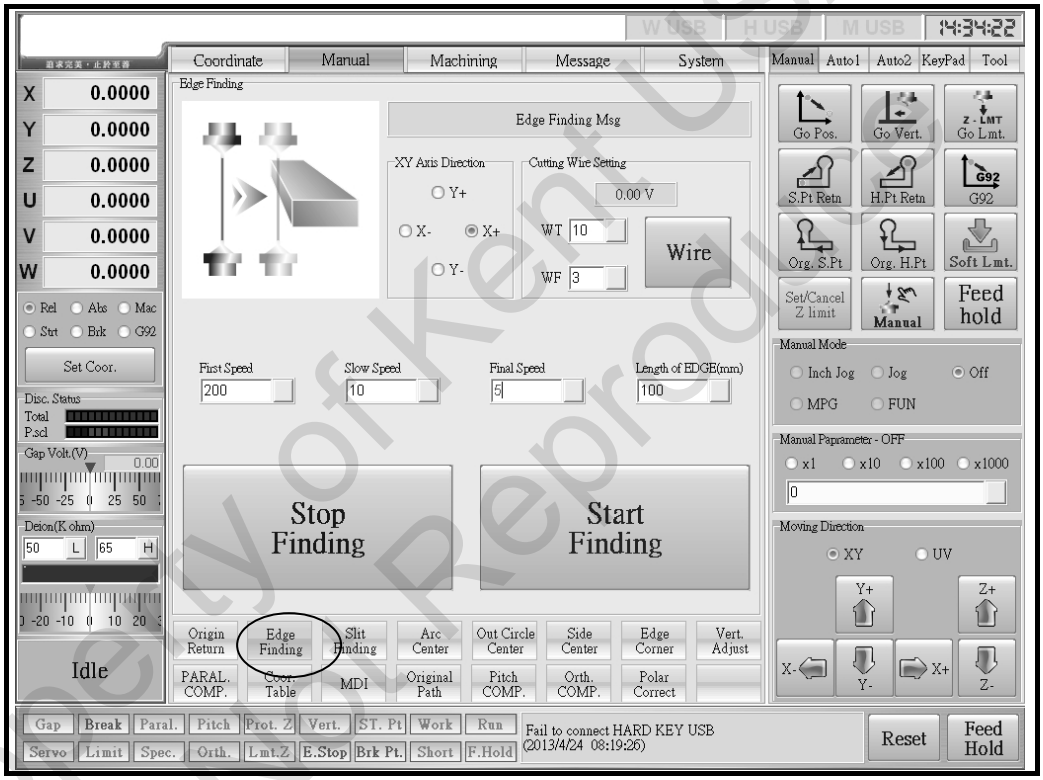

（3） **Speed**：Unit mm/min

First Speed: The wire's speed under the 《Edge》 mode.

Slow Speed：The speed when wire touches workpiece the first time.

Final Speed：The Speed after the wire contact to the workpiece again.

Property of Kent USA
Do Not Reproduce

Length of EDGE：The range of machine's moving distance. When the machine is moving over the range, "Over the Movement Range " will appear. Please check the input condition at this time.

※ Please input the correct value in order to increase the accuracy when using the EDGE FIND.

（4）Setup the condition of Wire Tension, Wire Speed and Axis Direction then press 《Edge》. Wire will start to progress and a message will appear when the work is done.

※ The Setup Parameter will be saved in the memory system.

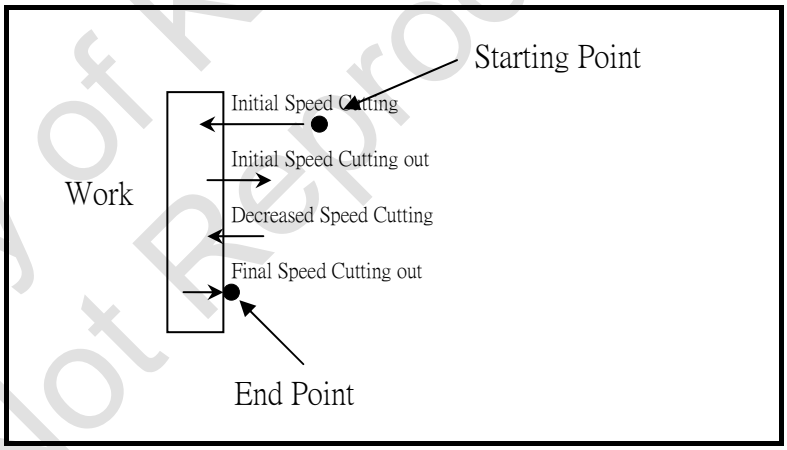

（5）Set the radius of the wire as relative coordinate. EX: Specify X0.125 and press《Enter》.

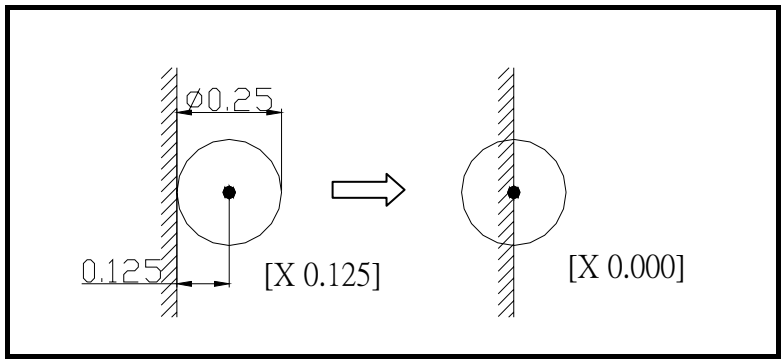

Property of Kent USA
Do Not Reproduce

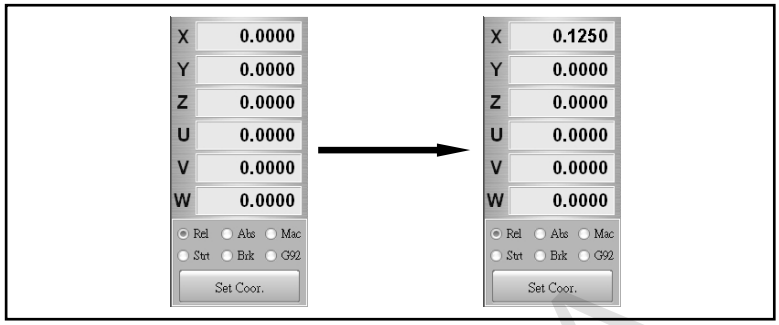

（6）Move the wire to the surface which is paralleled to Y-2 plane.

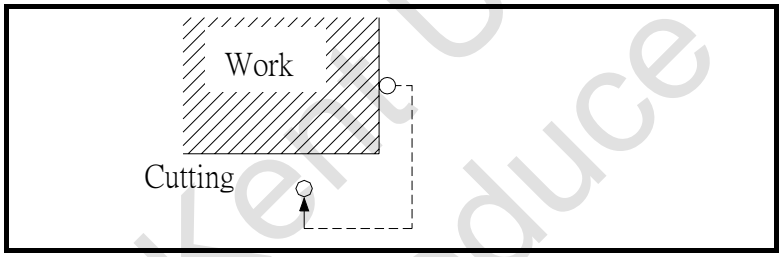

《JOG》《＋X》《－Y》《－X》《＋Y》

（7）Return to《Edge》mode.

（8）Press《＋Y》to start EDGE FIND.
When the EDGE FIND is completed, the message “Edge completed” will be shown on the screen.

（9）Set the wire radius as REV. Coordinate.
EX: Assign Y－0.125, then press《Enter》.

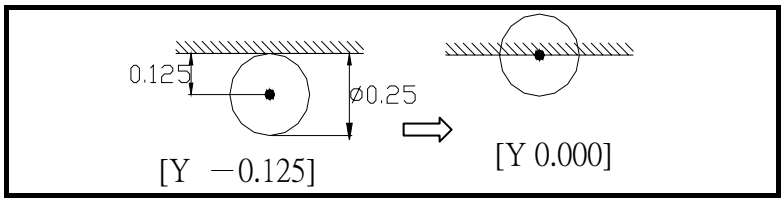

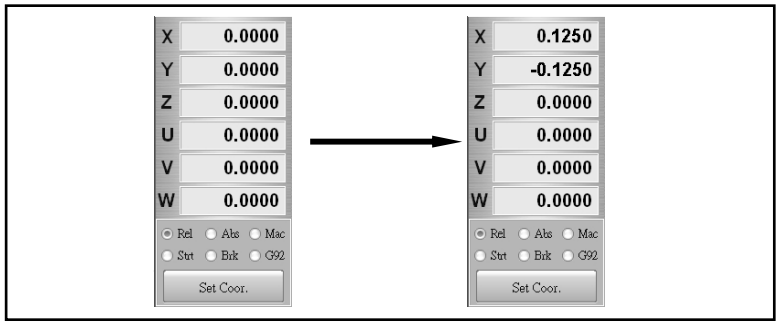

Property of Kent USA
Do Not Reproduce

（10）Burn the wire and move it to REV. Coordinate: X, Y (0,0) position.

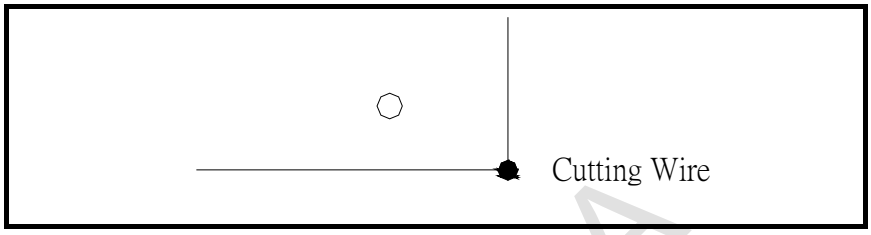

Set X, Y (0,0) as reference original point.

《JOG》
《＋X》《－X》《＋Y》《－Y》

（11）Move the cutting wire to X－40.000 and Y＋20.000

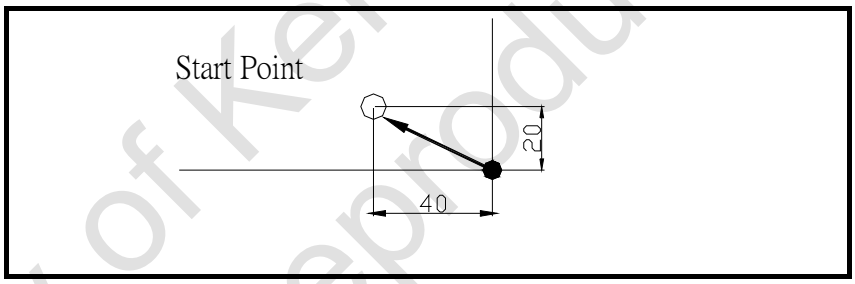

Use《JOG》,《－X》and《＋Y》keys to move the cutting wire close to the start point.
Press《INC_JOG》then press《－X》and《＋Y》to move the wire to start point.

（12）Lower the Z axis and move the upper machine head to machining position.

Property of Kent USA
Do Not Reproduce

11.2 EDGE FIND by using remote control

（1）Let the cutting wire close to the workpiece

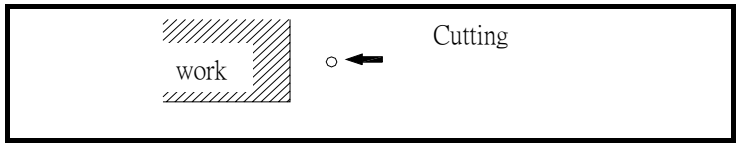

（2）Press《FUN》on the remote controller, the light will on

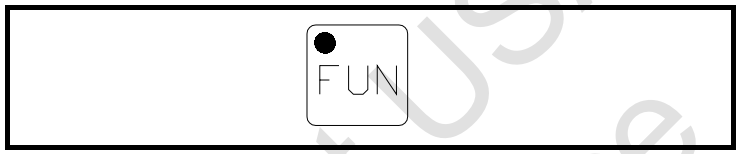

（3）Press《MODE》on the remote controller, 【Manual】mode will appear on the screen. Press《MODE》again, the function will appear in the order of《Original Point》→《Edge》→《Slit》→《 Center》→《Cylindrical Center》→《Center of dimention》→《Vertical》→《Parallel Compensation》→【Machining】

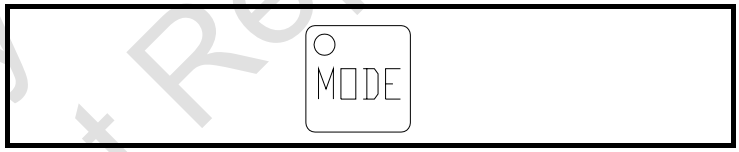

（4）Press《+X》《－Y》《－X》《＋Y》on the remote control to assign the XY axis to the designated position.

Property of Kent USA
Do Not Reproduce

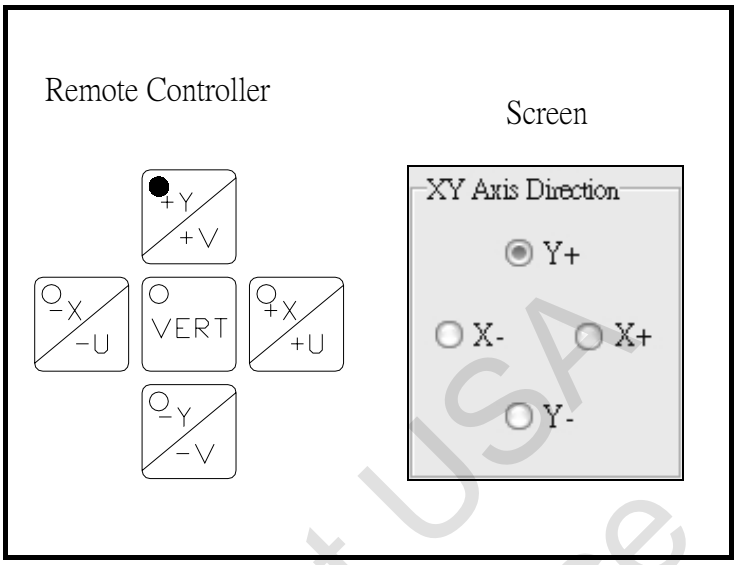

（5）Check the working wire setup and speed.

（6）Press《START》on the remote control to start the EDGE Find

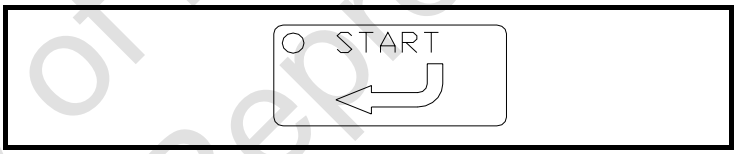

（7）Press《HOLD》to stop.

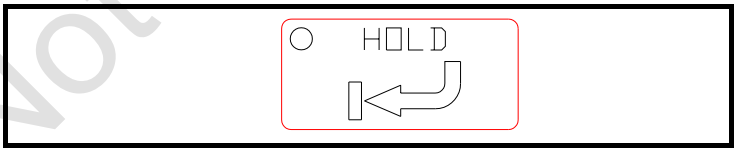

11.3 Take Machining Start hole as the reference point

（1） When the wire is located in the starting hole of workpiece, please do the following procedures for Positioning.

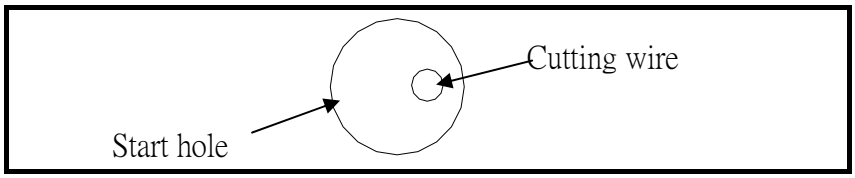

Property of Kent USA
Do Not Reproduce

(2) Under【Manual】select《Center》, 3 modes are shown as follow

1. Short circuit exclusion.
2. Manual Center Find.
3. Auto Round center Find.

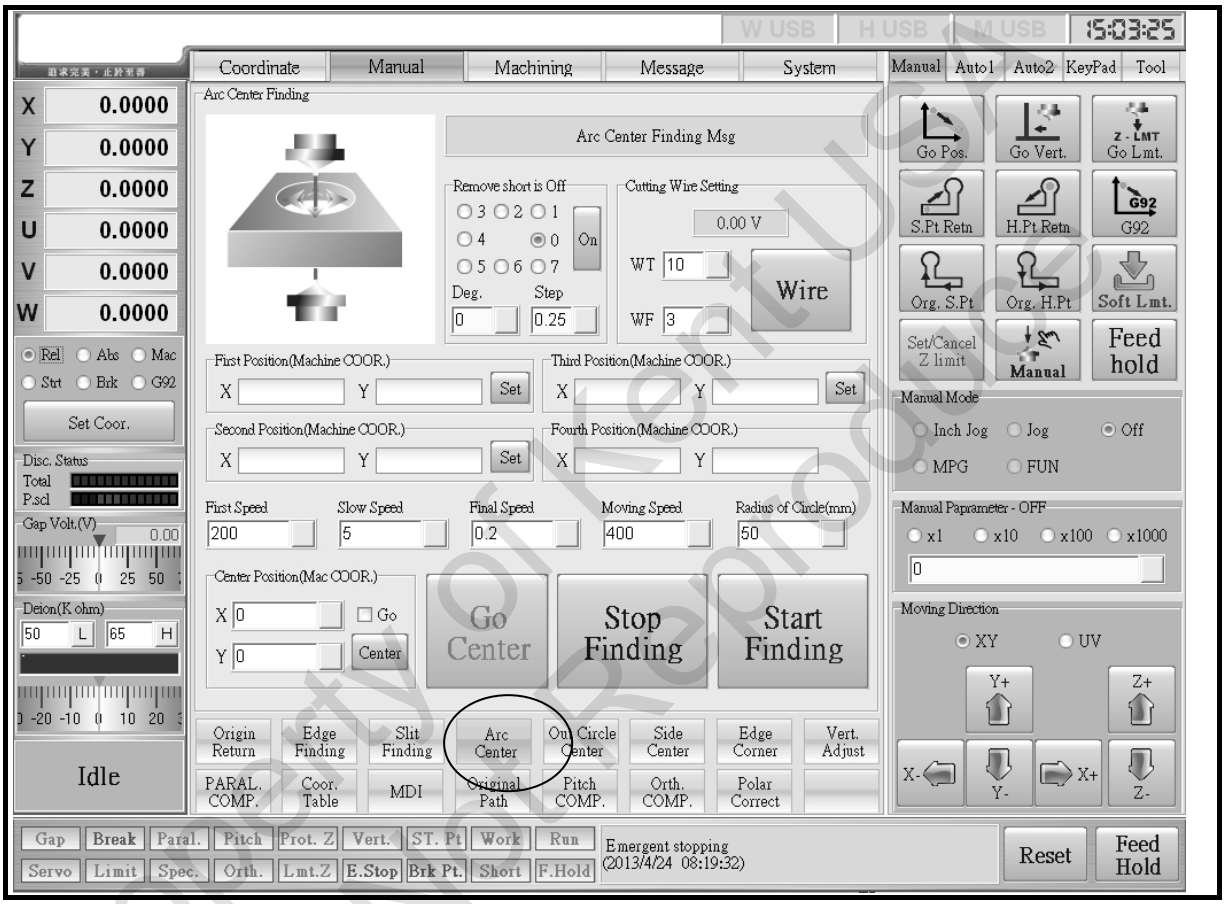

Property of Kent USA
Do Not Reproduce

（1） If the radius of the circle is too small, short circuit will occur after the threading process. At this point please switch on Short circuit exclusion to solve the issue.

1. **Short circuit exclusion.**：Move the wire outward with a spiral pattern, when the gap voltage reach DC8V (Wire returns to the normal status), the wire will start to search the round center again.

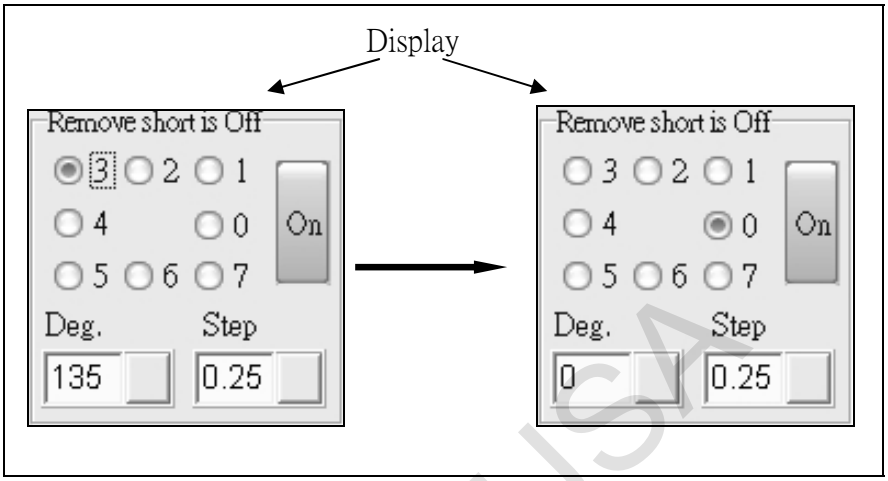

A. After selecting On, the entire area will turn yellow and On will switch into Off , which means the feature has started to work.

B. There are 2 modes of cutting direction, Customize and Fixed mode. When both are assign to be used, Customize mode will operate first.

Fixed mode：8 types of cutting angle from 0 to 7, the value of angle can be obtained from "Deg".

Customize Mode: Click "Deg" to input the value. Range: 0° ~360°

EX: Click "Deg" and type 90° , the wire will move at the direction of 90° .

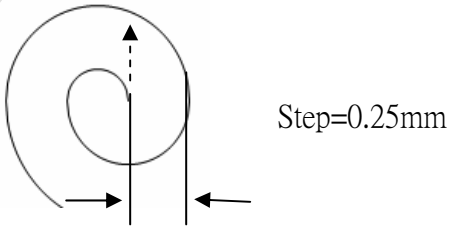

C. Step：Spiral route, the distance between the starting point and the outer edge.

EX：Step :0.25mm

D. Speed：Unit mm/min

During the Short Circuit exclusion, the speed at this time will be different from the normal status due to the gap voltage increased. Examples are shown below:

Property of Kent USA
Do Not Reproduce

EX: Set hole diameter as 0.5mm and Step as 0.1mm.

First Speed: >0.5mm, when gap voltage increases, short circuit may occur again.

Slow Speed： = initial speed/2

When the speed is too fast during the second time cutting, it may cause the distance of the final cutting out become too long.

Final Speed：Step/2

Moving Speed：= Step。

The speed when the wire is moving to the center of the hole.

Radius of the circle：=Diameter of the hole

! Note

When Short Circuit exclusion is not solved, "Over the Diameter Range" will appear. Please check the input value at this time.

2. Manual Center Find：Using 3 point to find the center of the circle.

A. Do the《Edge》process in any direction, but do not operate under the short circuit situation.

B. After return to the《Arc Center》, select SET under the first coordinate (Mechanical Coordinate). At this point X and Y coordinate will show on the block.

C. Repeat the same step for second and third coordinate (Mechanical Coordinate).

D. Click Center under central coordinate, X, Y value will be displayed. Press Go then X, Y will move to the assign position.

3. Auto Center Find：After setting up the require parameter, press Center Find so that the machine is able to find the central position.

Property of Kent USA
Do Not Reproduce

A. Set the speed parameter（reference to **11.1(3)**）

B. Click Go under center coordinate, X or Y will move to the center position. X or Y will move the starting point if Go isn't been selected.

C. Select《Center》,《Wire》will begin. X or Y will start Center Find process when the gap voltage reaches the Edge find voltage.

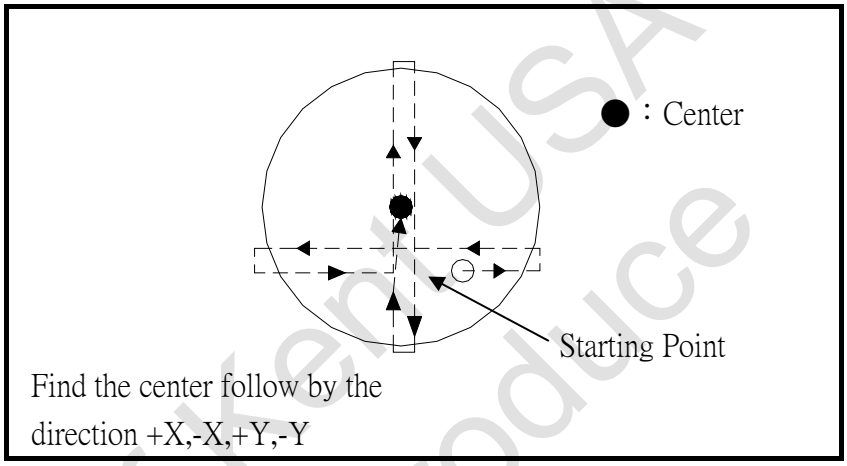

（2） Rev. Coordinate

If the reference point is far away from basement, operator can set the reference point as Rev. Coordinate. Shown as below:

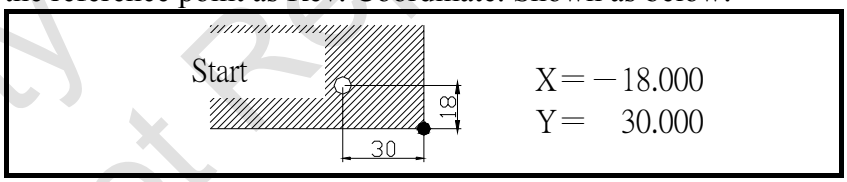

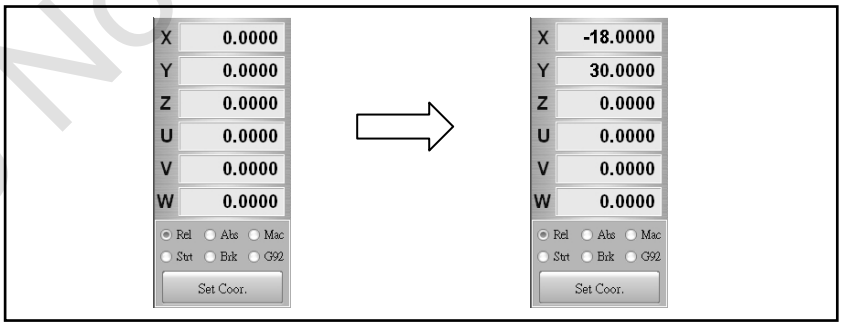

Property of Kent USA
Do Not Reproduce

11.4 Searching center by using remote controller

（1）Put the wire through starting hole. Cutting Wire should be in the center of starting point.

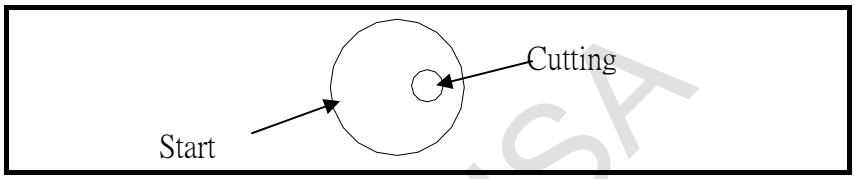

（2）Press《FUN》on the remote controller, the light will on

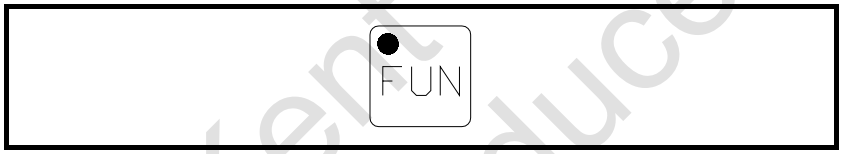

（3） Press《MODE》on the remote, the screen will return to【Manual】Press《MODE》again until the screen shows《Arc Center》

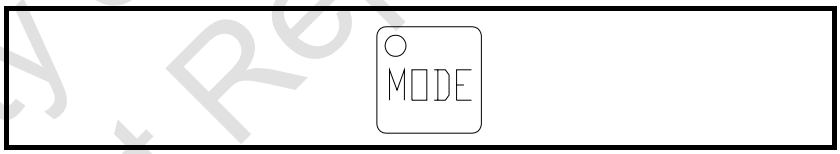

（4）Check the working wire setup and speed.
（5）Press《START》on the remote control to start the EDGE Find

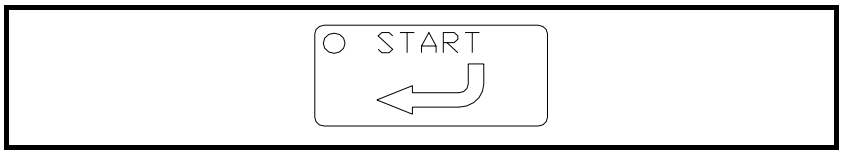

（6）Press《HOLD》on the remote control to stop.

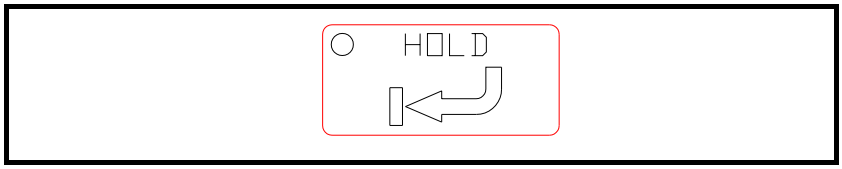

Property of Kent USA
Do Not Reproduce

11.5 Positioning in the slit

（1）Make the wire through the slit

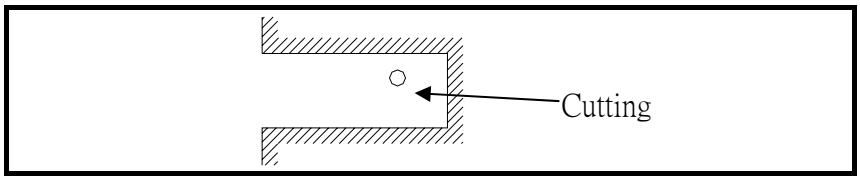

（2） Select《Slit Finding》under【Manual】. There are 2 types of Slit:

1. Manual Slit Find 2. Auto Slit Find

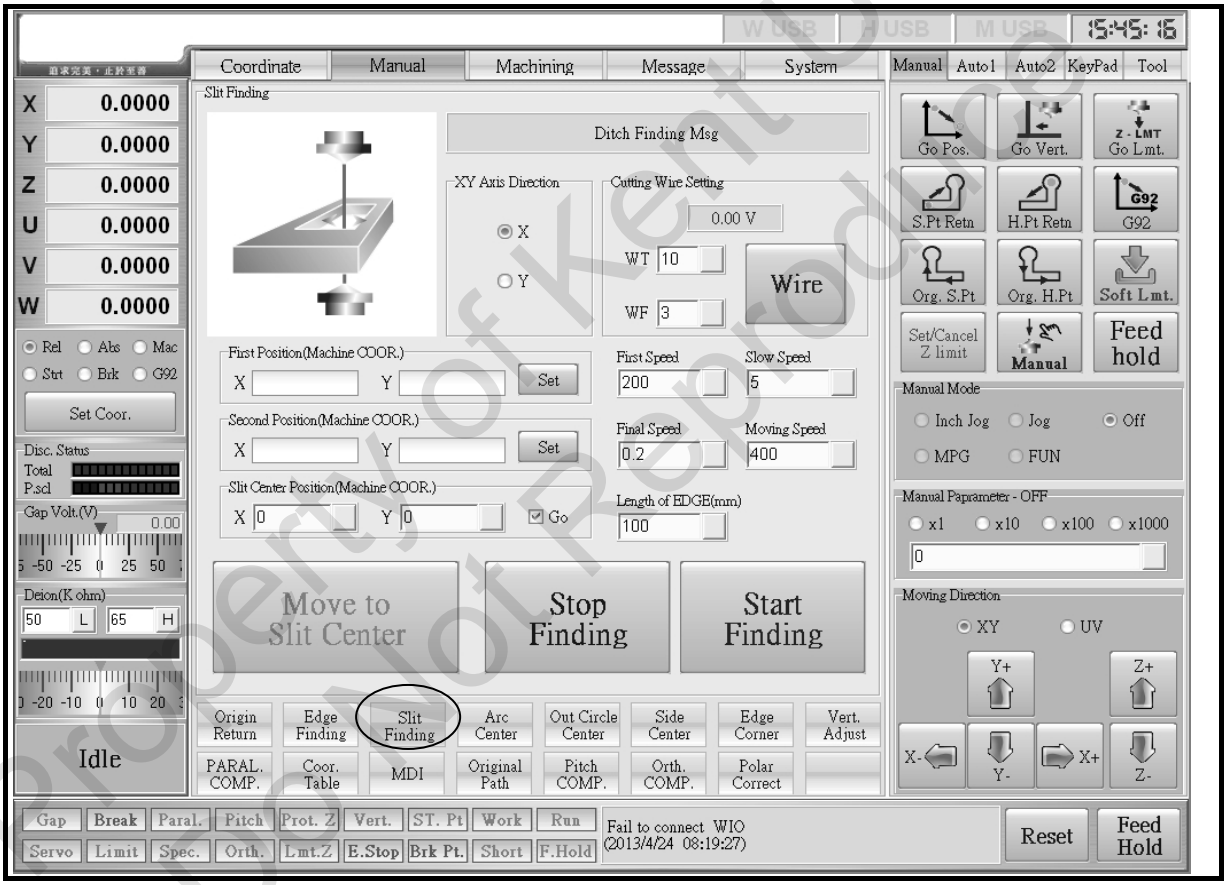

1. **Manual Slit Find**：This feature helps to find the distance between the two ends of an axis then the machine will start to move to the central position.

A. Click “Positioning Slit” on XY plane direction
B. Set the speed parameter（reference to **11.1(3)**）
C. Use + and – key to operate Edge Find, however this method cannot work under short circuit situation.

Property of Kent USA
Do Not Reproduce

D. After return to the《Slit finding》, select SET under the first coordinate (Mechanical Coordinate). At this point X and Y coordinate will show on the block.

E. Let the wire move to the opposite direction and then operate《Edge》. This method cannot work under short circuit situation

F. After return to the《Slit》, select SET under the second coordinate (Mechanical Coordinate). At this point X and Y coordinate will show on the block.

G. Press Go under slit center coordinate, the value will be display.

H. Click《Slit Center》, X or Y will move to the center position.

2. **Auto Slit Find**：Press《Slit》after input the required parameter, the system will find the slit center automatically.

A. Click "Positioning Slit" on XY plane direction

B. Set the speed parameter（reference to **11.1(3)**）

C. Click《Slit Center》, X or Y will move to the center position. X or Y will move the starting point if Go isn't been selected.

D. Select《Start Finding》,《Wire》will begin. X or Y will start Center Find process when the gap voltage reach the Edge find voltage.

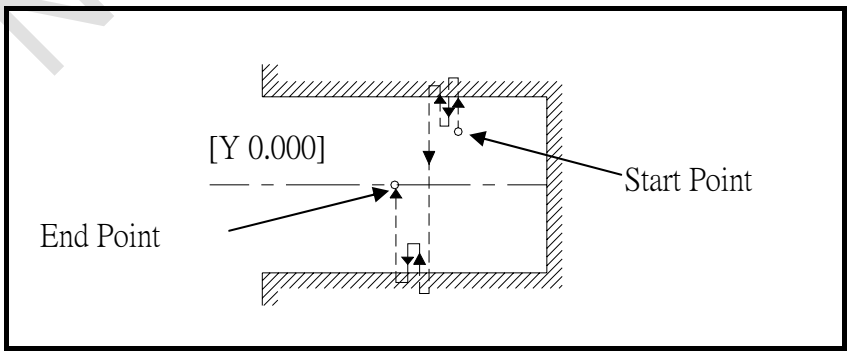

Property of Kent USA
Do Not Reproduce

11.6 Remote controller Positioning in the slit

（1）Make the wire through the slit

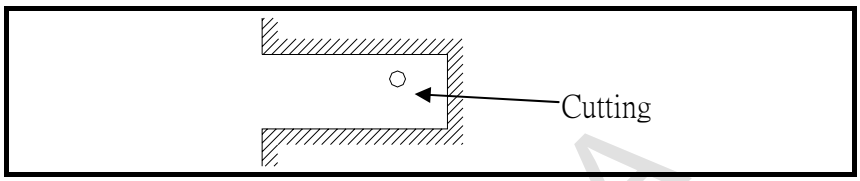

（2）Press《FUN》on the remote controller, the light will on

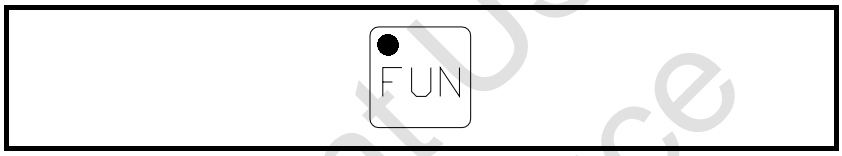

（3）Press《MODE》on the remote, the screen will return to 【Manual】

Press《MODE》again until the screen shows《Slit Center》

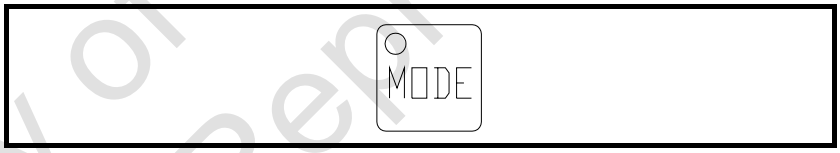

（4） Check the setup speed, working wire and coordinate of center slit.

（5）Press《START》on the remote control to start the EDGE Find

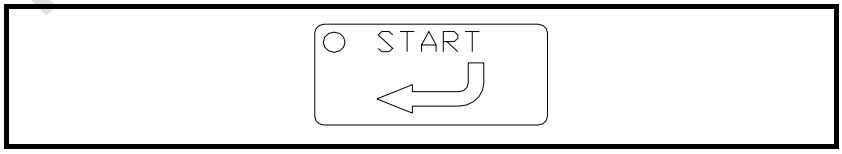

（6）Press《HOLD》on the remote to stop.

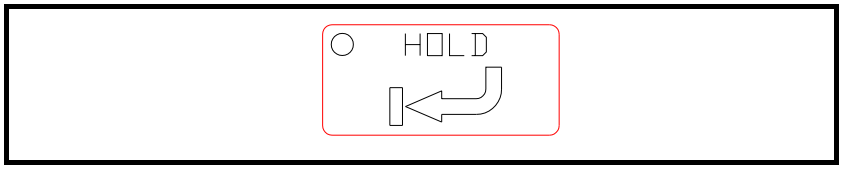

Property of Kent USA
Do Not Reproduce

12 Preparation Before Machining

Before machining, operator should adjust the gap between upper or lower flush head and workpiece, then execute the Dry Run function to check the status of machine movement.

12.1 Adjust the position of upper flush head

（1）Tighten the upper flush head cap.

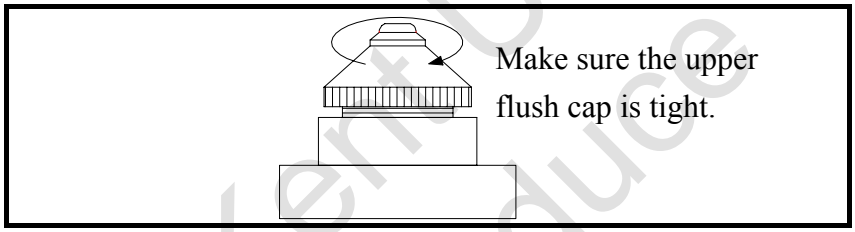

（2）Move the XY table under Manual mode till the lower machine head is under workpiece.

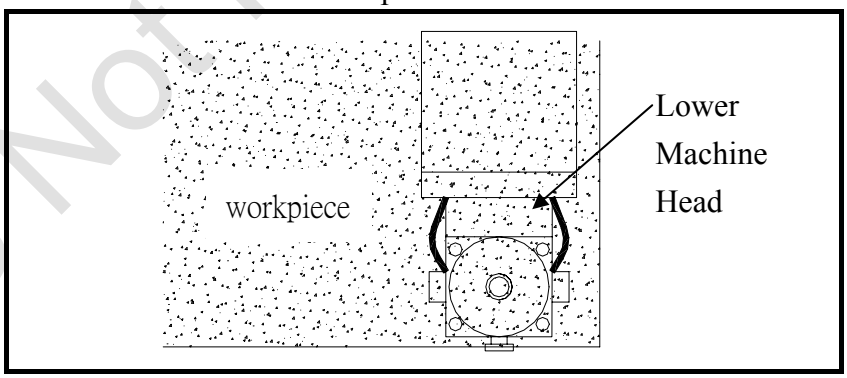

《JOG》
《＋X》《－X》
《＋Y》《－Y》

Property of Kent USA
Do Not Reproduce

（3）Loosen the upper flush cap and adjust the gap between the lower head and workpiece to 0.2mm with Blad Feller Gauge.

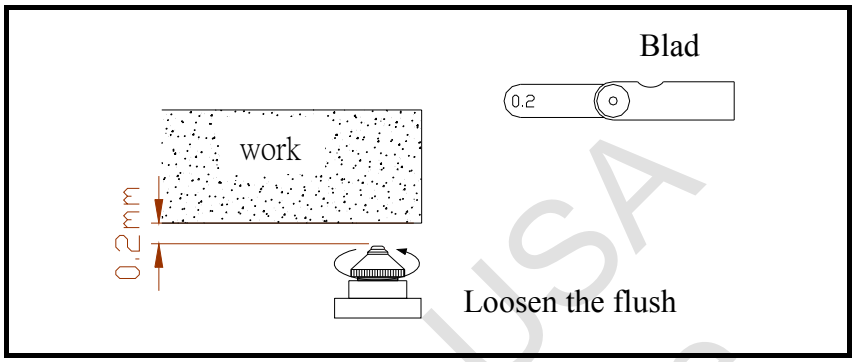

12.2 Adjust the gap of lower flush head

（1）Make sure the lower flush cap is screwed on the lower machine head correctly.

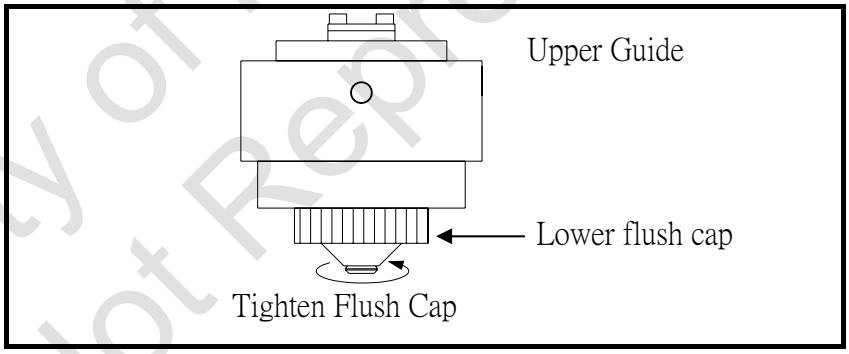

（2）Move the XY table till the upper machine head is above the workpiece.

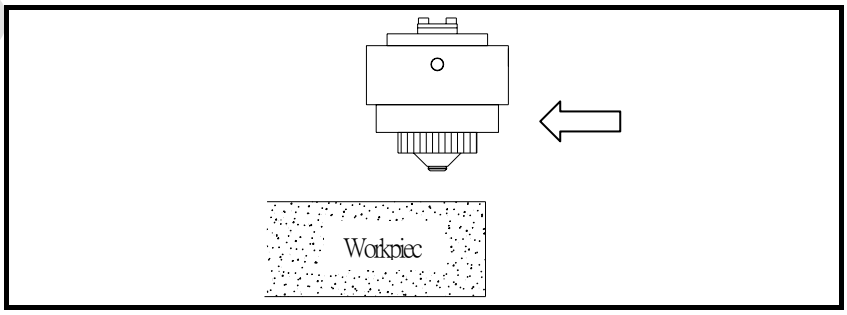

《JOG》
《＋X》《－X》
《＋Y》《－Y》

Property of Kent USA
Do Not Reproduce

（3）Press《－Z》key and lower the upper machine head alone Z axis.

Be careful don't let the machine head hit the workpiece or holding Jig while lower down the upper machine head.

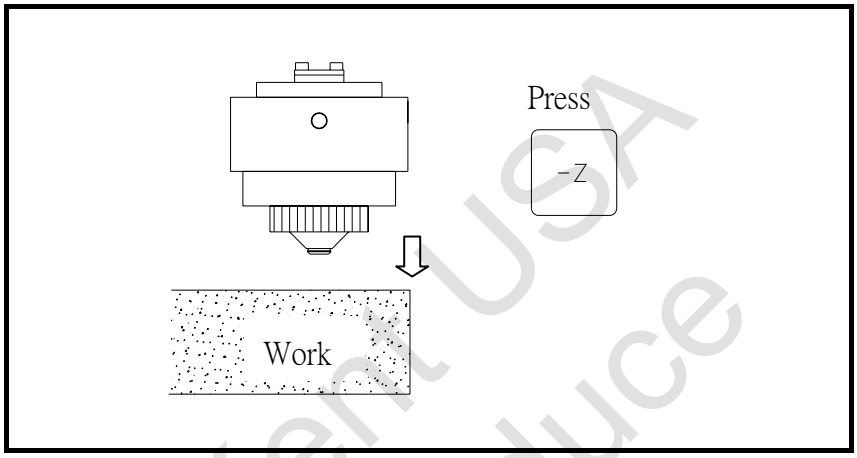

《－Z》

（4）Lower the feed rate while upper machine head close to workpiece.

《LOW×1》《－Z》

Use Jog mode to move to lower machine head while lower flush cap close to workpiece .

Put the Blad Feller Gauge between lower flush cup and workpiece.

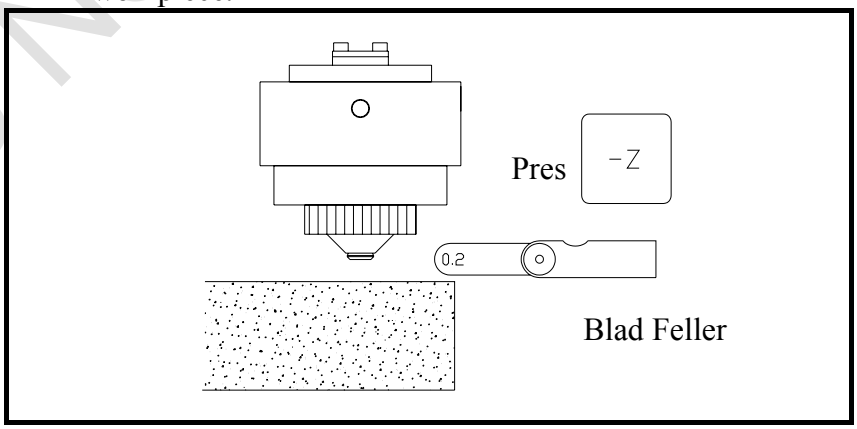

《INC_JOG》
《MED×10》→《LOW×1》
《－Z》

Property of Kent USA
Do Not Reproduce

（5）Lower down Z axis and move the Blad Feller Gauge back and forth. When the Blad Feller Gauge cannot be moved, it means the adjustment is finish.

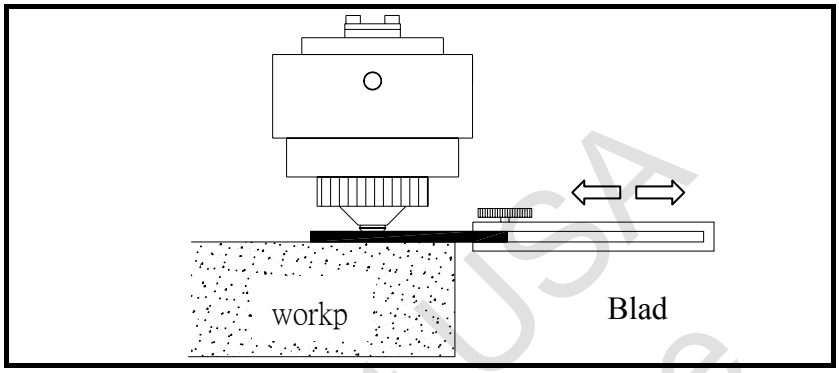

《－Z》《－Z》《－Z》《－Z》……

（6）Set Z equal to 0 in Position Screen. Press 《Z》, 《0》 and then press INPUT

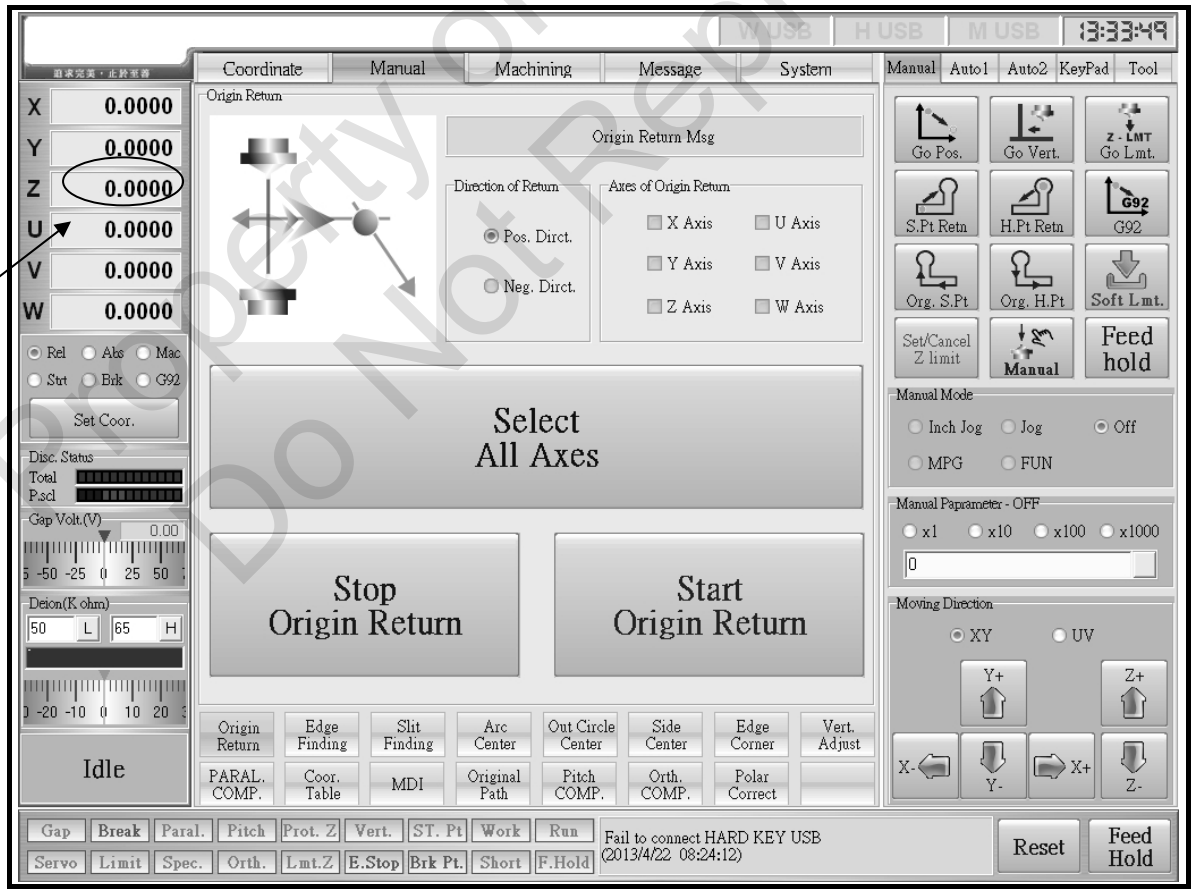

Property of Kent USA
Do Not Reproduce

（7）Set Z axis limit in POSITION screen.（Start "Find the original point" is required, or the warning alert will appear.）

Select《Set/Cancel Z axis limit》，the color of Z axis limit will change

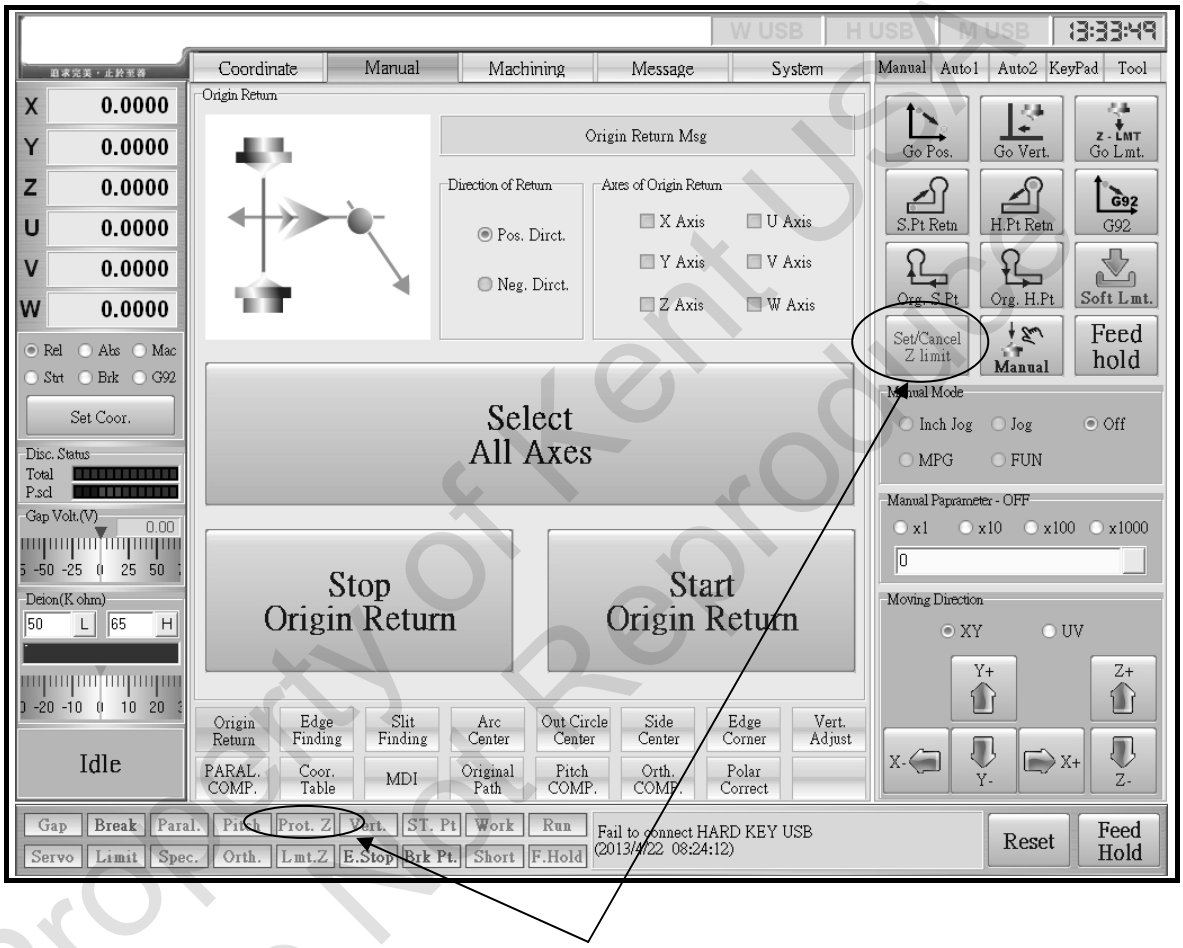

The color of Z axis will change and the Mechanical Coordinate will appear.

（8）If the upper machine head is moved lower than the Z-limit, the alarm will will be ON and Z axis will stop moving.

Press《＋Z》key and move the Z axis up and higher than the lower limit, then press《RESET》to clear Alarm.

（9） Press《Set/Cancel Z axis limit》key to cancel Z axis lower limit.

Property of Kent USA
Do Not Reproduce

12.3 Checking machine movement via DRY RUN function

Use dry run to run the program and make sure the upper and lower machine head won't touch the Jig holder, or exceed the working range,

Check the following situation while machine moving:

① Lower flush cap doesn't touch the jig holder.

② Upper and lower flush cap are not exceed the working area.

③ Cutting Path is not exceed workpiece, or cover the hole on the workpiece.

④ Rotating angle of the workpiece is match to the angle in the program.

⑤ Program error or Call error Code.

＊Operation Procedure

（1）Cut the wire and remove it from wire guide. Press《Manual Wire Threading》button to remove the rest of the wire. After the wire is removed, press《Manual Wire Threading》button again.

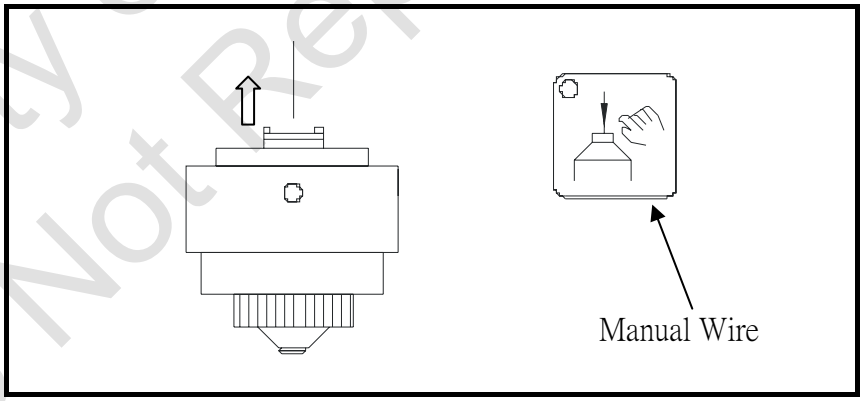

（2）Under【System】→ AUTO1 →《Operator Parameter》assign manual dry run speed value and then press Enter. The value is proportional to the dry running speed.

（3）Under【Auto1】select《Dry Run》and then click Start

（4）Since the value of Manual Dry run is 0, the machine won't function when pressing the 《START》button

To stop the machine immediately, press Pause or the《HOLD》button on the remote control.

Property of Kent USA
Do Not Reproduce

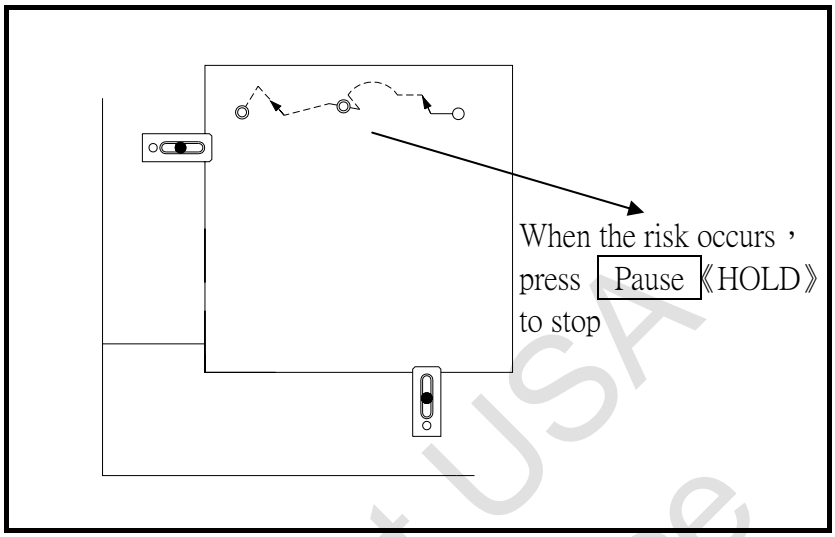

（5）If the dry run is complete and there is no problem occurred, operator can install the workpiece properly. otherwise, please check the setting and install the workpiece again.

✐ Hint

Make sure the flush cap won't touch the jig holder

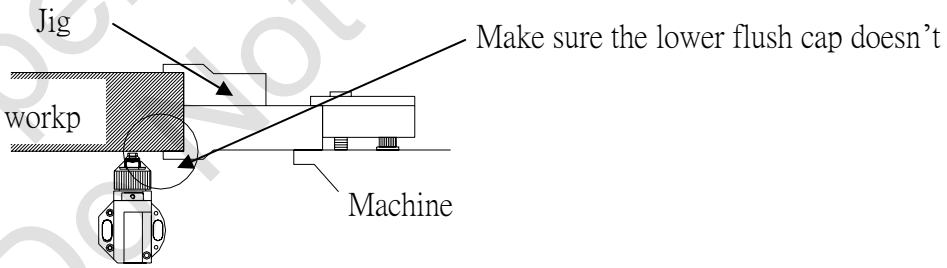

Property of Kent USA
Do Not Reproduce

13 Machining

After the NC program input, diagram simulation, parameters, setting, Sparking Parameters setting and Cutting wire position setting are complete, please switch to【Machining】mode. Press【Machining】to enter machining mode.

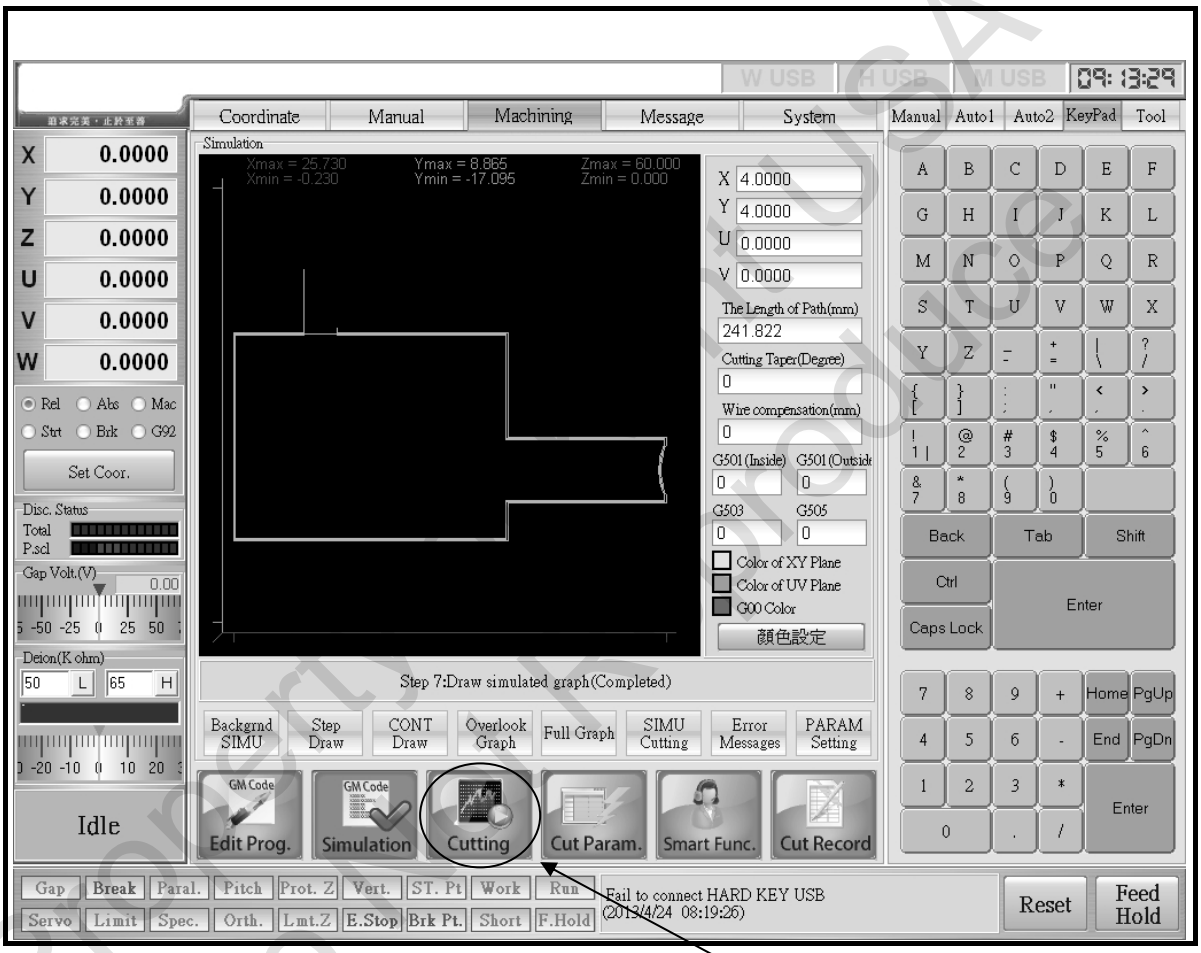

After switch to【Machining】mode, Cutting is shown. Press Wire、Water、EDM keys, then press CYCLE START to start machining.

Property of KENT USA Do not reproduce

13.1 Before Press CYCLE START Key

One the Spark is begin, program setting cannot be changed. Please double check the setting before press CYCLE START

（1）Check the current position.

∗Check Machining Start Point

∗Check the perpendicularity of U and V axis.

∗Check Z axis limit.

（2）Check the display screen

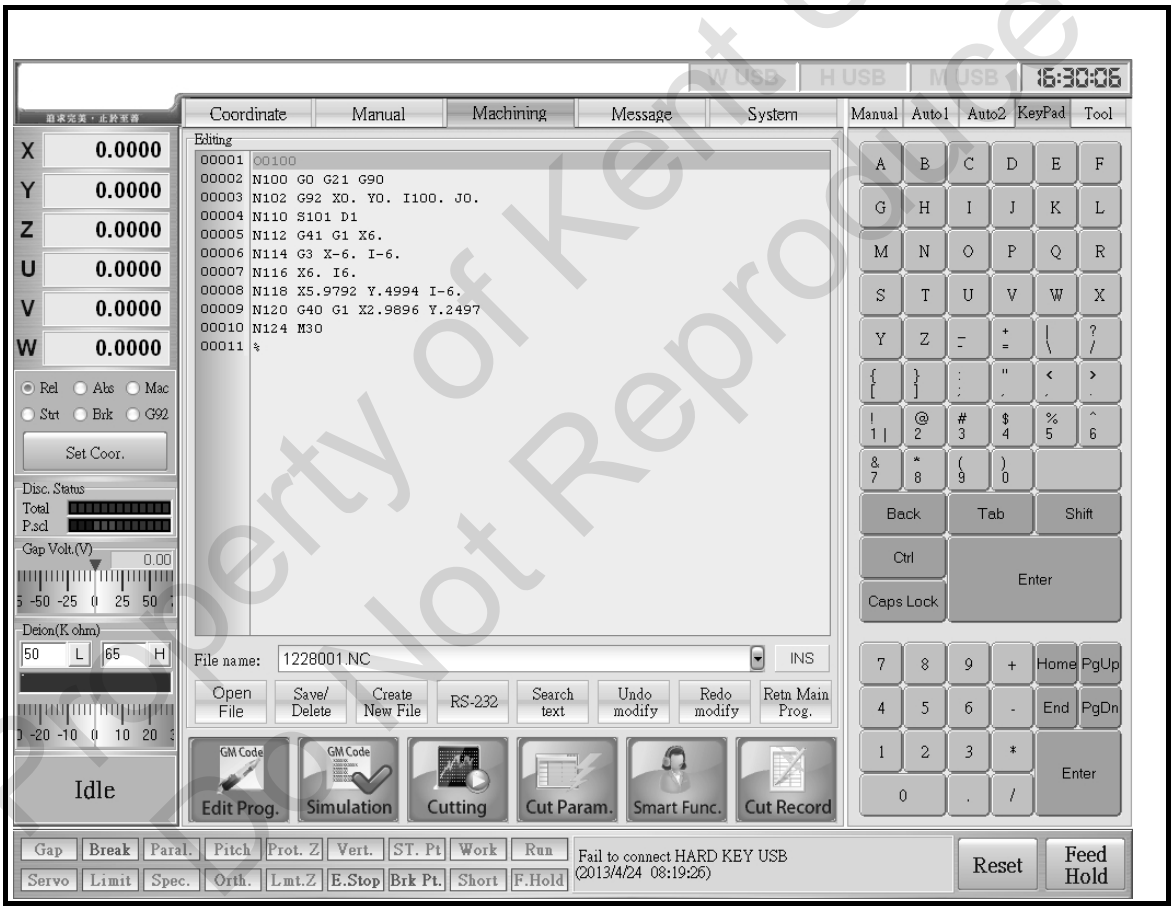

∗ Check program code.

∗ Check sub-program code if necessary.

Property of Kent USA
Do Not Reproduce

（3）Press《Simulation》to check the parameter setting.

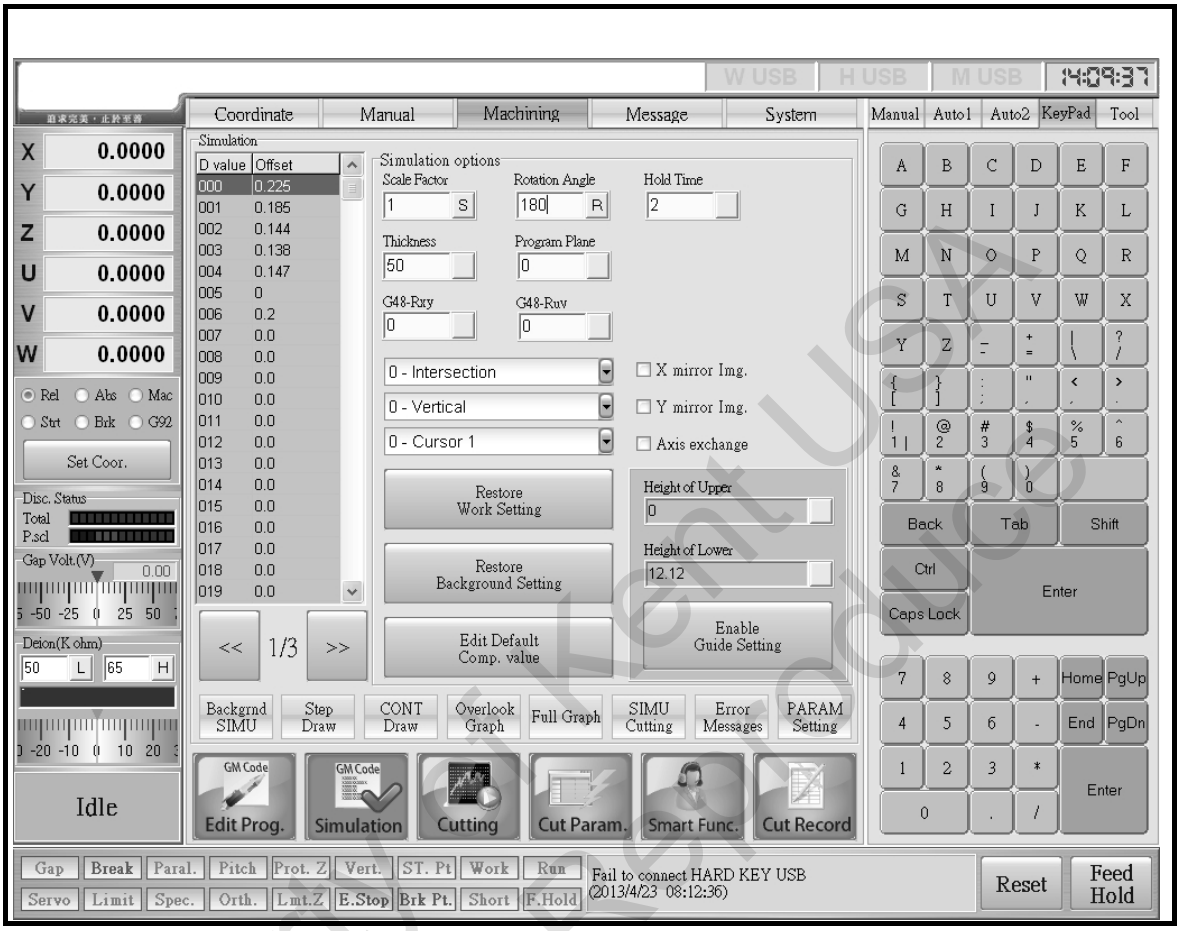

＊Check Rotation angle and Scale

＊Check X,Yaxis mirror axis and axis switch setting.

＊Check Path compensation

＊Check Cone angle setting

＊Check the setting is same as drawing.

Property of Kent USA
Do Not Reproduce

（4）Under 《Smart Func.》，click「Arc/ corner」check EDMing Parameter and other assist functions.

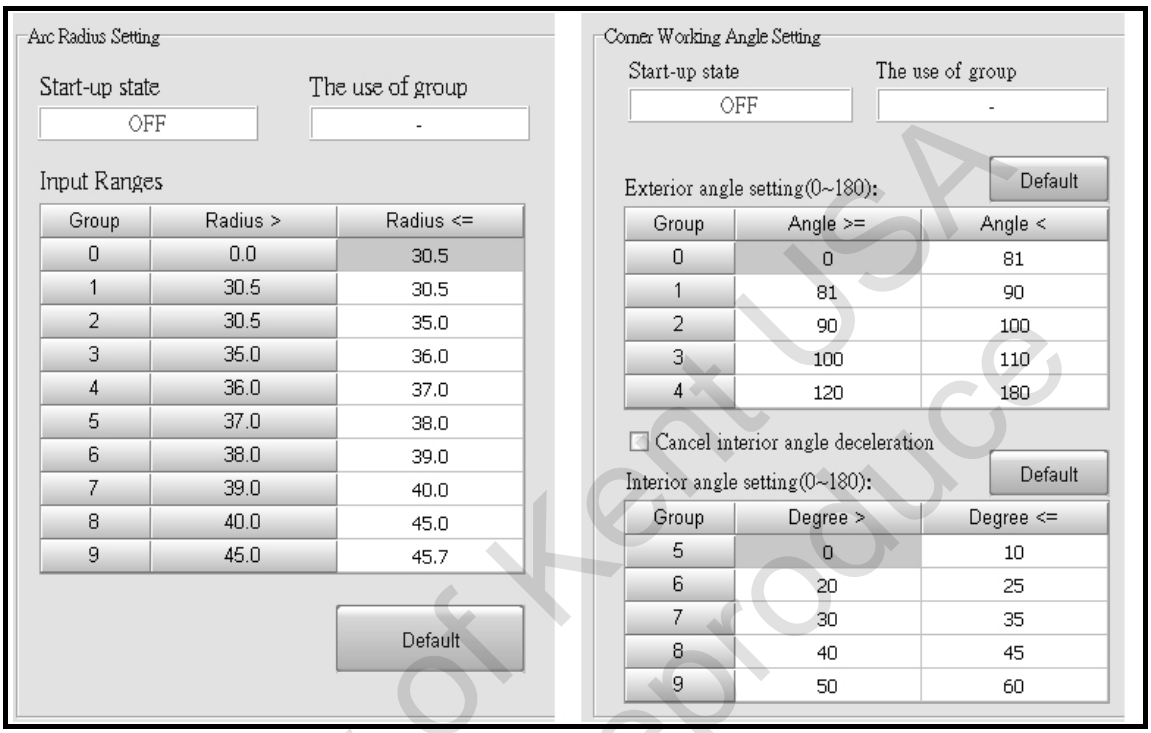

＊Check FLY CUT function
＊Check AWT function.
＊Check Arc function Setting.
＊Check Corner function Setting.

✐ Hint

※If all the functions are not shown on the screen completely, please type “EDM ON” in input column then press《Enter》

Property of Kent USA
Do Not Reproduce

（5）Press 【Machining】key to back to MONITOR Screen.

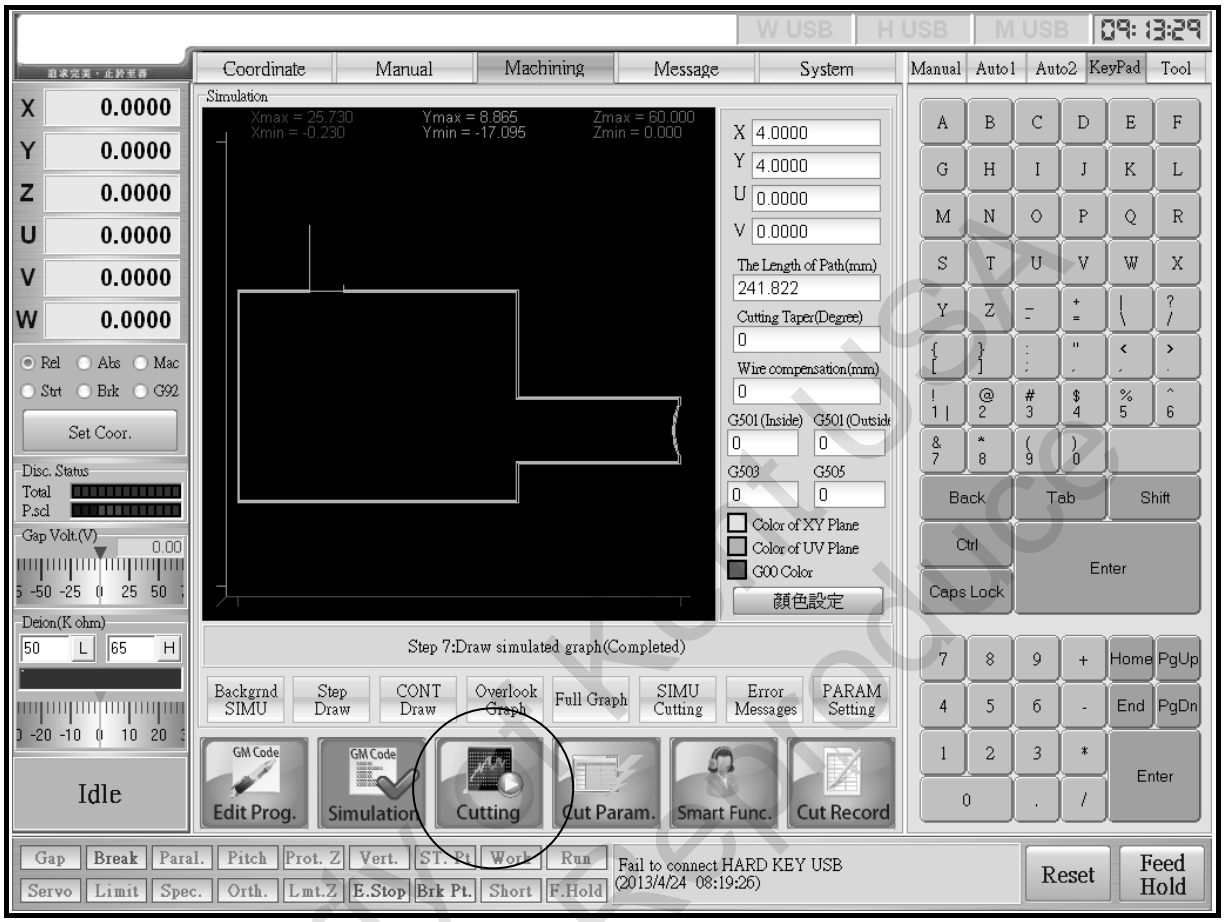

Property of Kent USA
Do Not Reproduce

13.2 Check Cutting Wire and Water Tank

（1）Is there enough wire for machining?

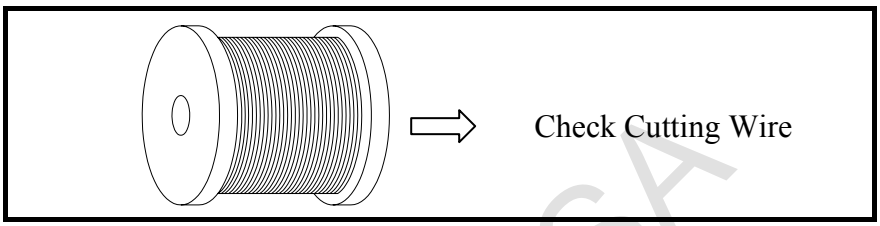

（2）Check Water Tank.

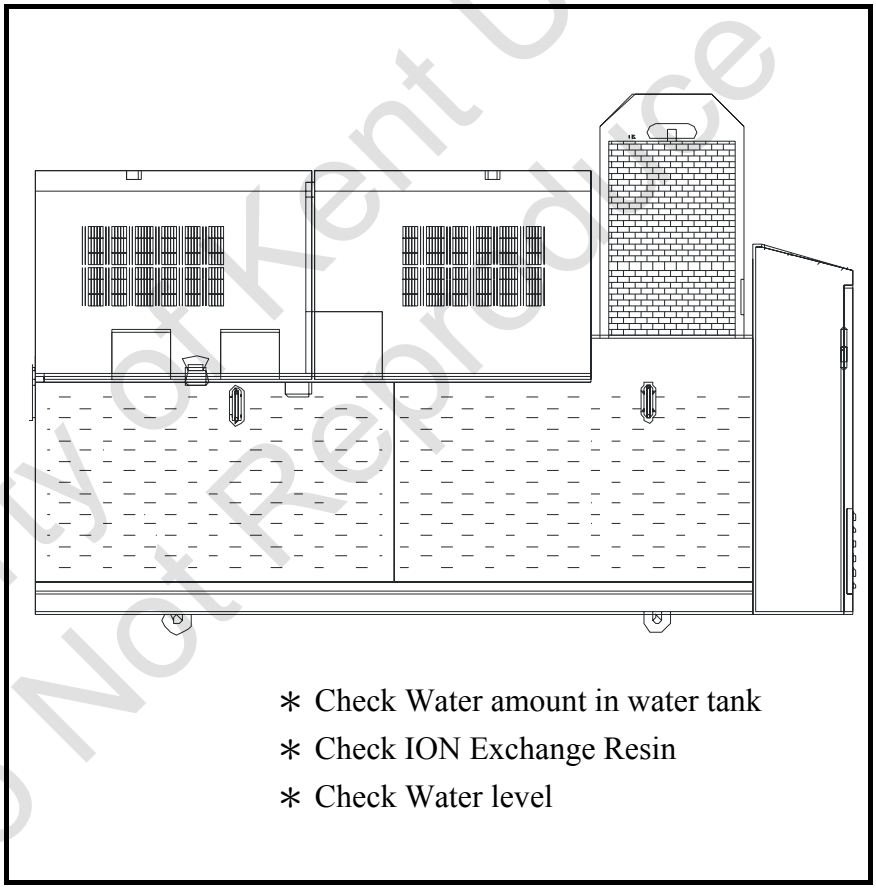

Property of Kent USA
Do Not Reproduce

13.3 Fill water in water tank（for submerged mode）

（1）Turn Pump on to fill the water tank.

Operation button for water tank

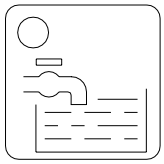

For Submerged Type Wire EDM：
①Press Water Dump Button (Light OFF) and shut down Water Dump.
②Press Water In Button (Light ON) and water in.

(2) Set up the water level height (5~10cm above the workpiece.)

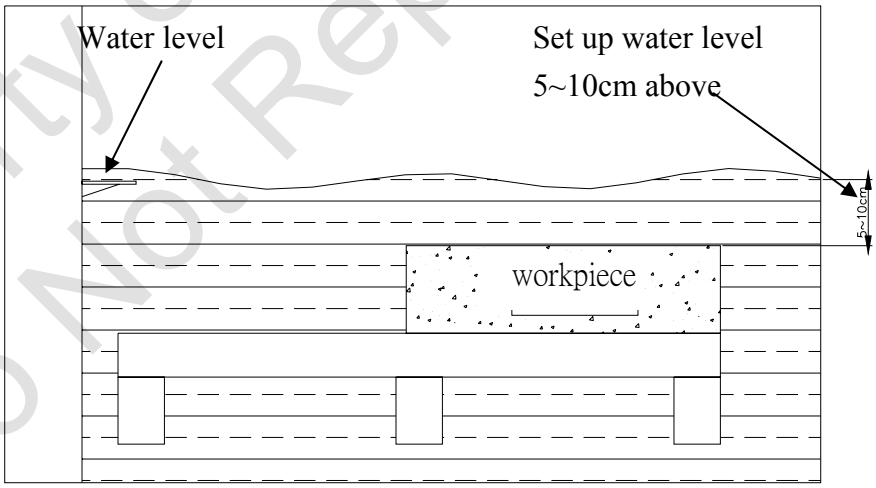

Property of Kent USA
Do Not Reproduce

13.4 After pressing CYCLE START

When all the setting is checked, and work tank is full of water, Press《CYCLE START》to start machining.

（1）Press WIRE key.

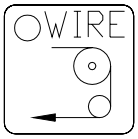

（2）the lights of＜Wire_Break＞and＜Short＞ON.

If the light of＜Wire_Brk＞and＜Short＞is ON, machining is not ready to discharge.

＜Wire_Brk＞Light is ON：

∗Check does wire broken?

∗Check does broken wire sensor touch cutting wire.

∗Check does cutting wire touch the metal part.

∗Check the angle between broken wire sensor and cutting wire.

＜Short＞Light is ON.

∗Check does cutting wire touch workpiece.

∗Check does cutting wire touch machine.

（3）Check Dry Run and Mac. Locked key.

Dry Run ⇨ Fast move. The movement won't stop even the cutting wire is Short Circuit, till wire broken.

Mac. Locked ⇨ Machine won't move. Only ABS and REV Coordinate are shown.

Property of Kent USA
Do Not Reproduce

Dry Run →OFF
Mac. Locked →OFF

（4）Check SINGLE BLOCK , M01

SINGLE BLOCK ⇨ Run by single block

M01 ⇨ Program stop inM01

Check program M01 "/" M01 is ON or OFF.

（5）Record the Machine Coordinate.

✎ Hint

Record the Machine Coordinate

Record the Start Point is to recover the error by the fatal error that cannot go back to the start point.

（6）Press CYCLE START key if all the setting is correct.

CYCLE START

Property of Kent USA
Do Not Reproduce

13.5 Minutes after EDMing

Cutting Wire n=might be broken in the first 5 minutes because of the unstable EDMing.

The operator should not press《CYCLE START》key and leave right away. 5 minutes monitoring is needed.

（1）In most of the case, wire is cutting in 5 minutes.

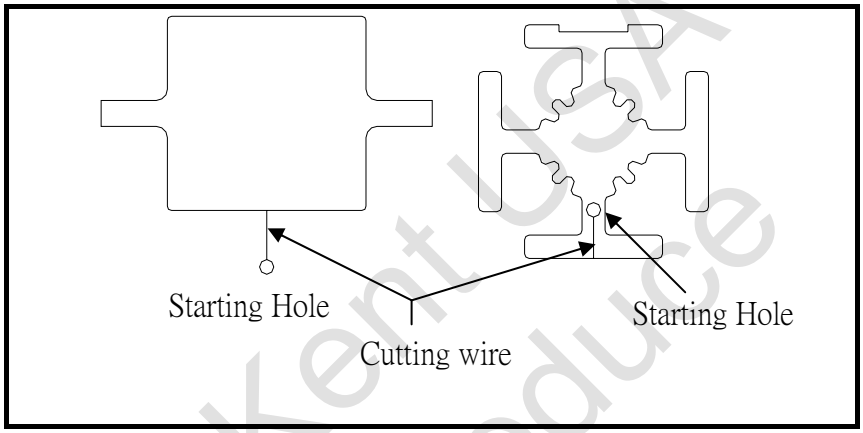

（2）The flushing water in starting hole will cause the EDMing unstable.

Low_V

While＜Low_Volt＞is sparking, the EDMing is unstable.

（3）Reduce the feed rate will make EDMing stable and ＜Low_Volt＞won't blink (reduce 20% ~30% is needed)

（4）When the cutting is stable, you can increase feed rate and set as the original value.

！ Note

When the EDMing is stable and still using the low feed rate, the EDMing efficiency and accuracy will be change.
When the wire is cutting in the shape, it's better to change the feed rate back to original setting.

Property of Kent USA
Do Not Reproduce

13.6 MONITOR

Switch to【MEM】mode and enter (MONITOR) screen.

The following functions are in MONITOR screen:

（1）There are 5 area in MONITOR screen.

① Program Diagram, Machining Time, Program content Compensation, Machining Speed.

② REV, ABS and Mechanical Coordinate.

③ Spark Parameter is shown. Setting can be changed via press↑、↓key

※ PS: Please press Enter after the adjustment.

④ Mirror、Axis Exchange、Parallel Compensation、Rotating Angle、Threading、M50/M60 status display.

⑤ Gap Voltage、Water Resistance.

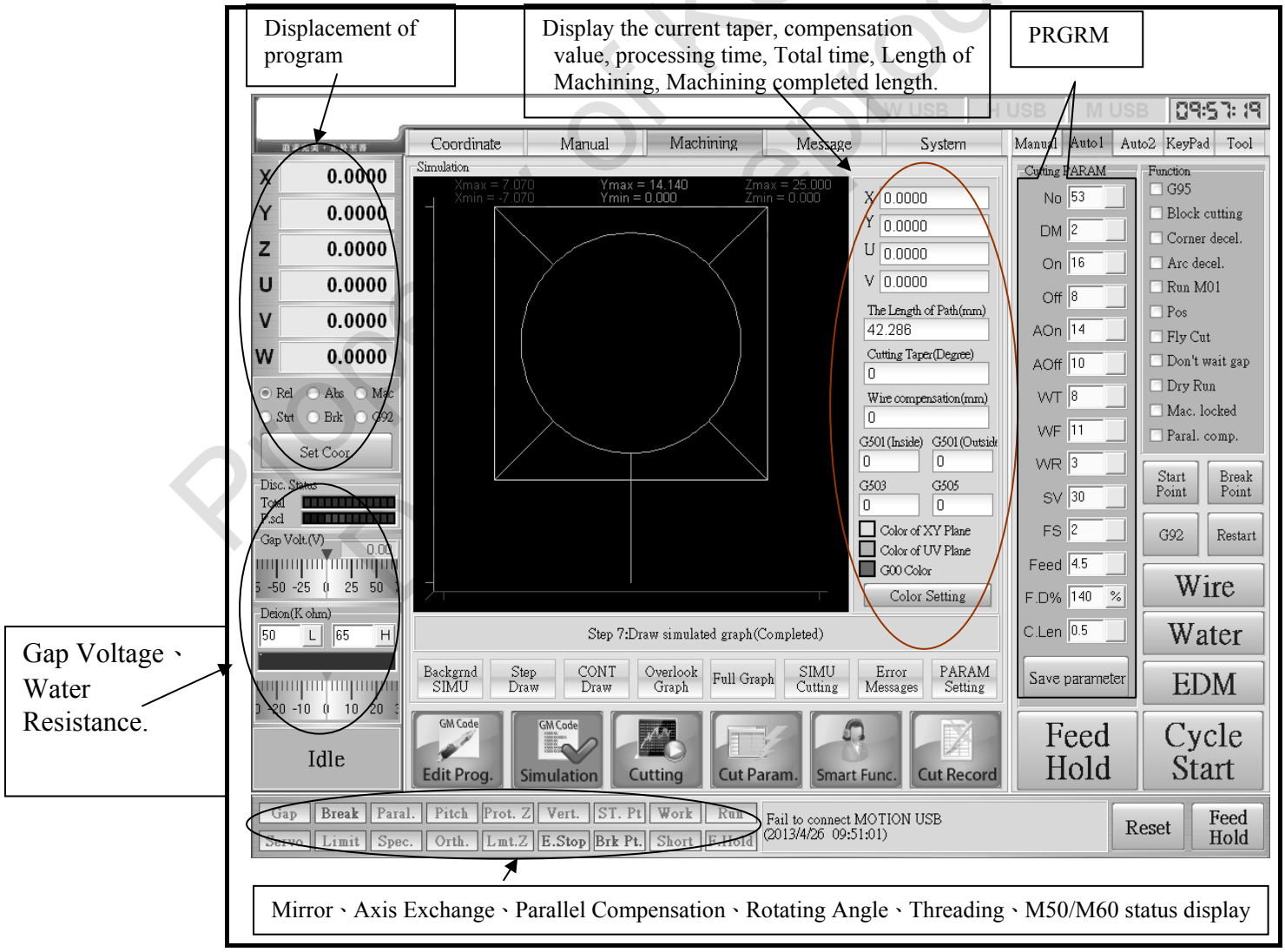

Property of Kent USA
Prohibited to reproduce

（2）Press《Save Parameter》the adjust machining condition can be saved.

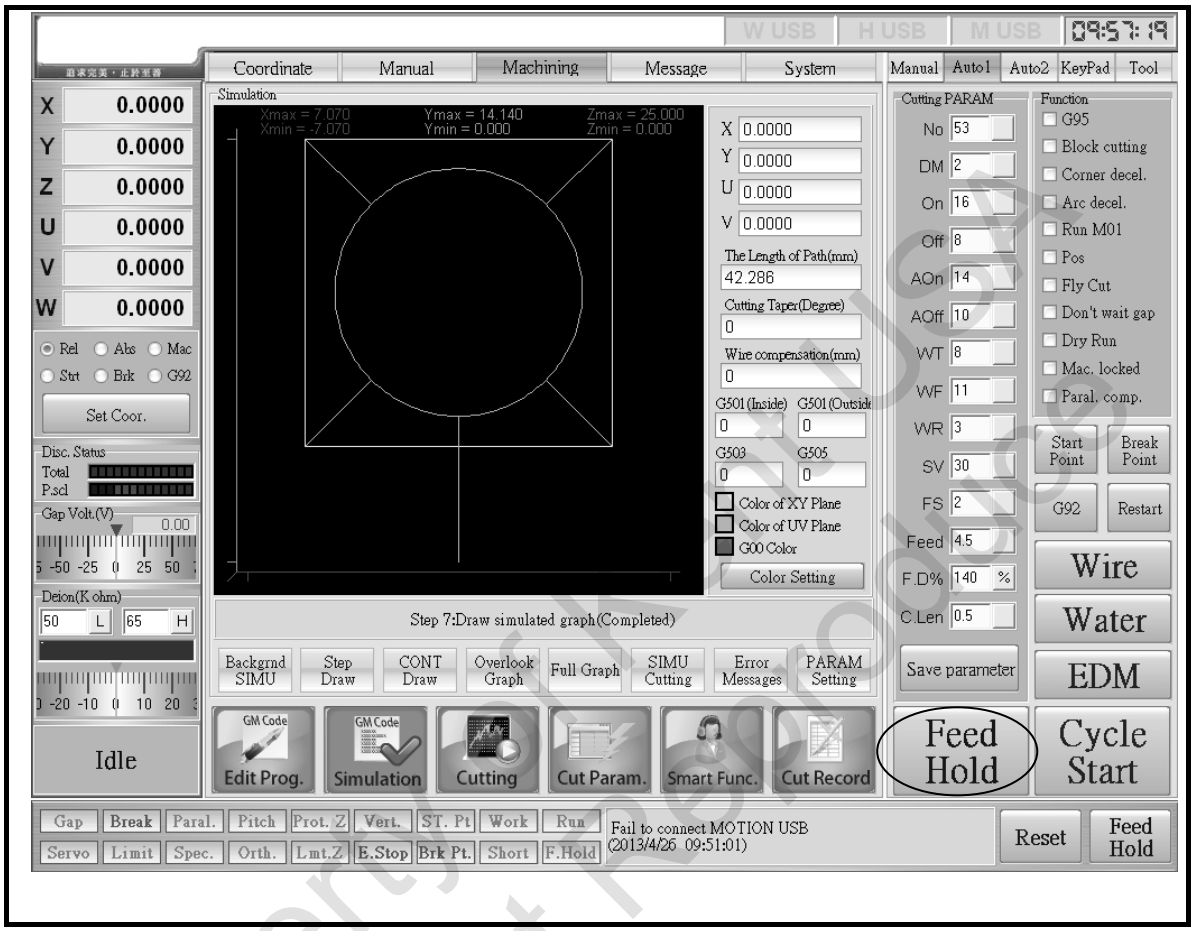

Hint

＊If《Save Parameter》does not be selected after the setup，the condition will reset.

Property of Kent USA
Do Not Reproduce

（3）Select《Z Uprise》, Z axis will rise to a certain height.

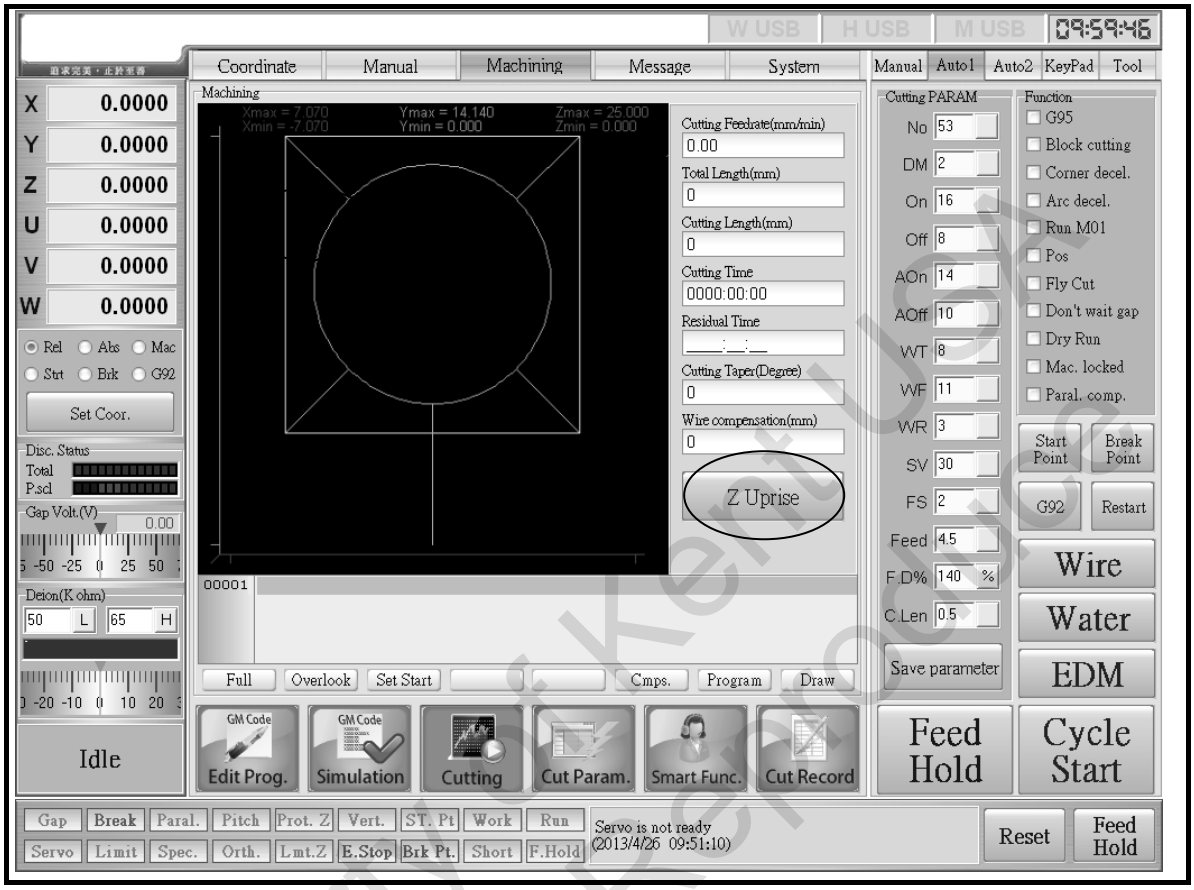

✎ Hint

＊Z Ascend function should be used while EDMing is stop.

＊When to use Z Ascend Function：

①EDMing complete and workpiece should be removed.

②When wire is broken and need to pull Z axis up for wiring.

③Exam the Machining is correct

Property of Kent USA
Do Not Reproduce

（4）Press《Edit Prog.》, NC program will appear on the screen.

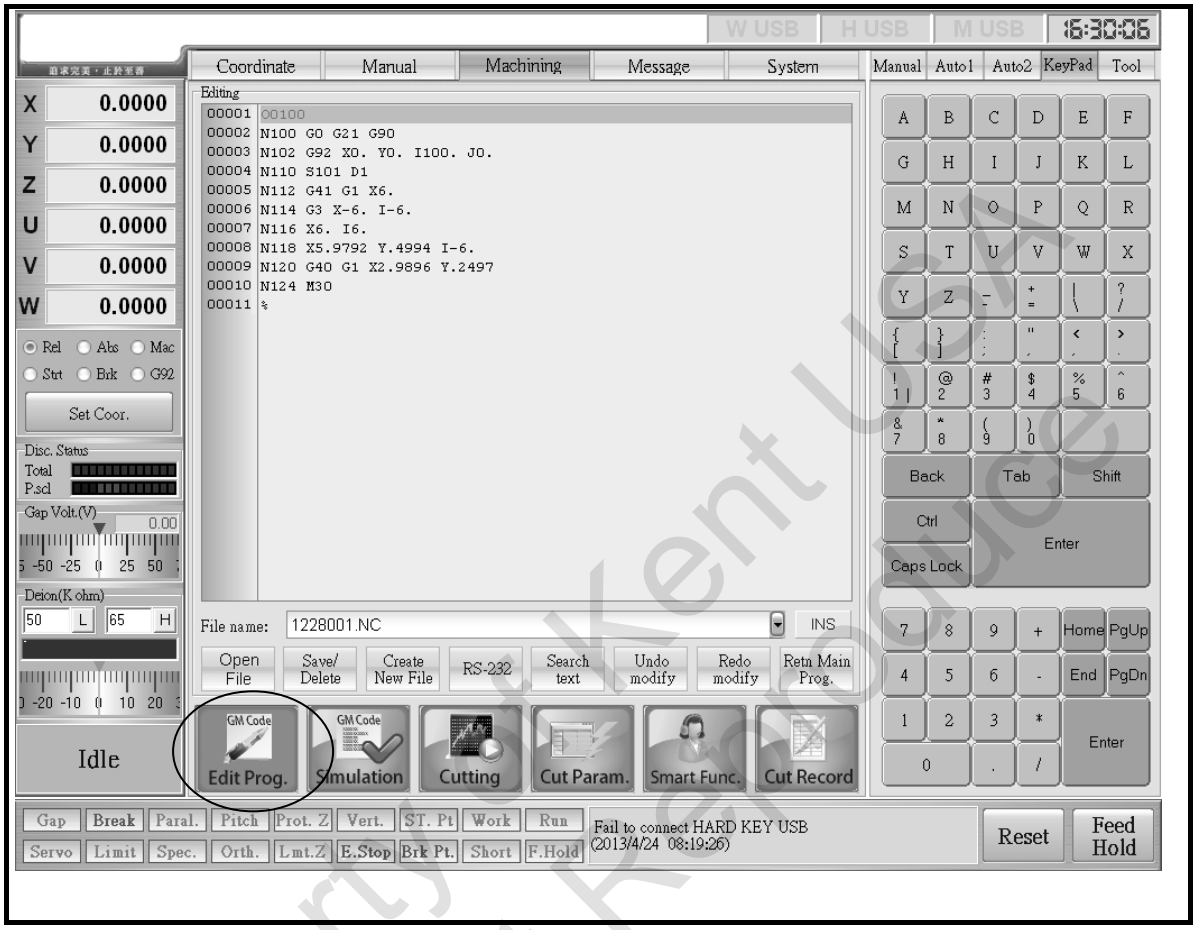

✎ Hint

On《Program Display》, make sure the program is executed from the first line. If not, press **Ctrl**+**Home** to reset the program.

Property of Kent USA
Do Not Reproduce

14 Machining Finish

Remove the workpiece when the machining is done.

（1） Open drain valve, drain the water in work tank. (for submergible type WEDM only)

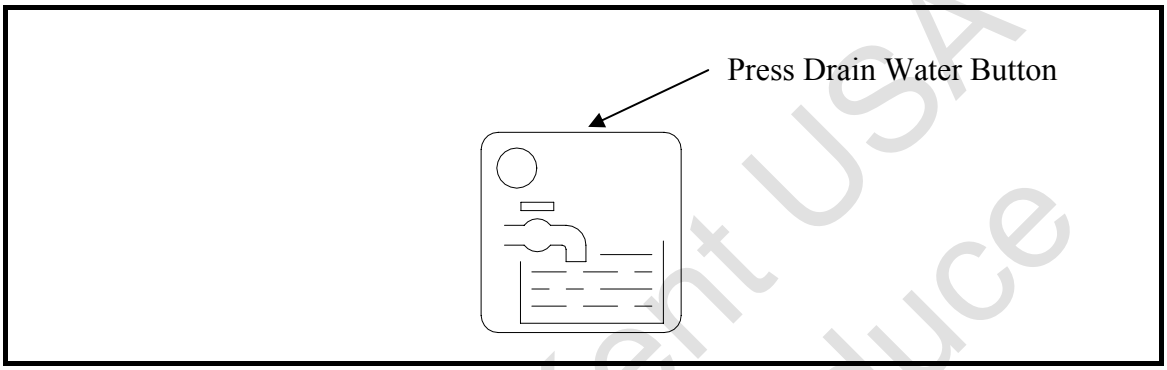

（2）Ascent the upper guide alone Z axis and check the workpiece.

Remove the workpiece with magnet.

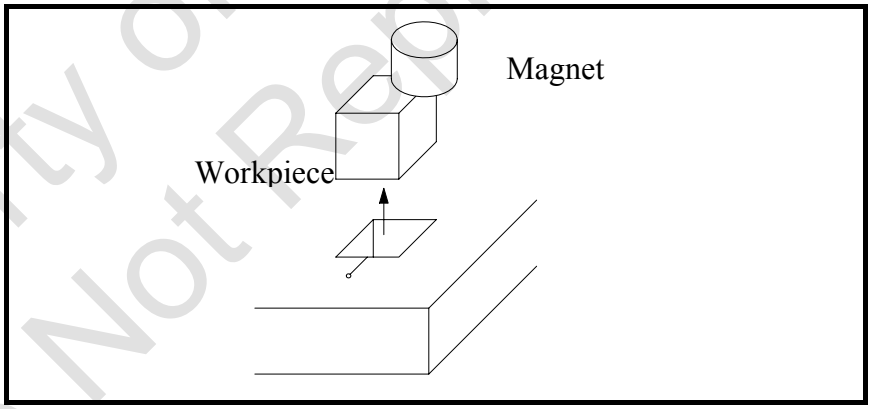

(3) If the finished piece cannot be removed by magnet, operator can move the XY work table and take out the parts from the button.

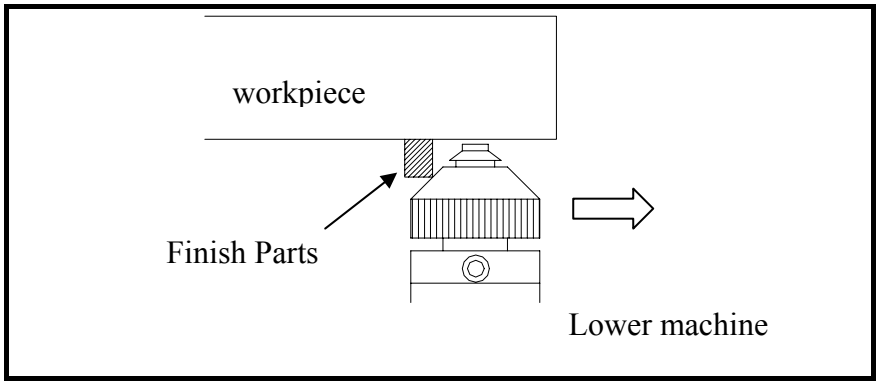

Property of Kent USA
Do Not Reproduce

! Note

While moving the XY table, please double check the moving direction. Moving in the wrong direction might damage the lower guide. Please adjust the feed rate to minimum speed.

《JOG》《LOW×1》
《＋X》《－X》
《＋Y》《－Y》

Property of Kent USA
Do Not Reproduce

15 Finish Workpiece Checking

Check the Finished Parts. Via the status of workpiece to make sure the machining procedure is correct.

（1）Check the surface to see if the cutting is correct and the surface is very smooth.

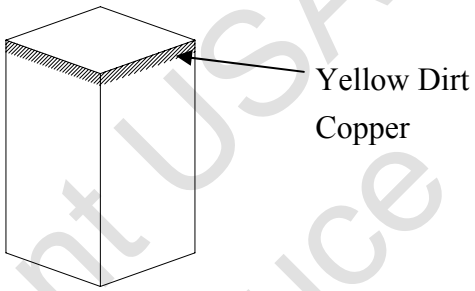

If there is some yellow dirt on the upper edge of workpiece, it should be the copper powder.

If there are curved marks on the surface, operator should check very careful and find out the reason.

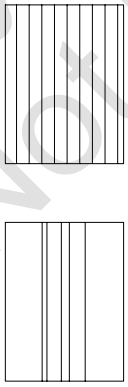

If the curved marks are shown on the surface evenly→ check the rollers for wire feeding is working smoothly.

If the curved marks are shown unevenly

→ ∗Flush head or other parts touch the workpiece.

∗There are some dirt or other compounds in the workpiece

✐ Hint

Copper Ionized

Copper Ionized situation will be appeared during EDMing when the conductivity of working fluid is too high.

The more difficulty EDMing, the more cooper ionized created. If the surface is too smooth, it will be difficult to cause the EDMing . Therefore, the copper ionized situation is appeared on the upper section of workpiece while EDMing with new copper

Property of Kent USA
Do Not Reproduce

（2）Measure the finished parts.

Check the sizes of finished parts.

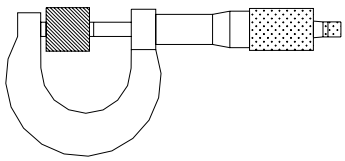

If the center section is thicker or thinner than the edges, it means The wire tension is too low. Use Tension Meter to check wire tension. Check is there any differences between actual value and Data on the screen.

✐ Hint

Because the copper debris will accumulate on the upper and lower section of finish parts, use millstone to grind the finished parts before measure it.

Center section is thicker than the edges

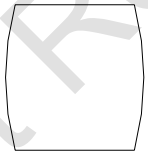

Center section is thinner than the edges

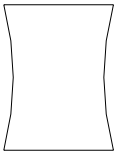

Is the wire tension too low ?

Property of Kent USA
Do Not Reproduce

16 Clean Up Machine Parts

After processing, clean all machine parts immediately.
Its easiest and most effective to clean the parts when processing liquid is remains wet.

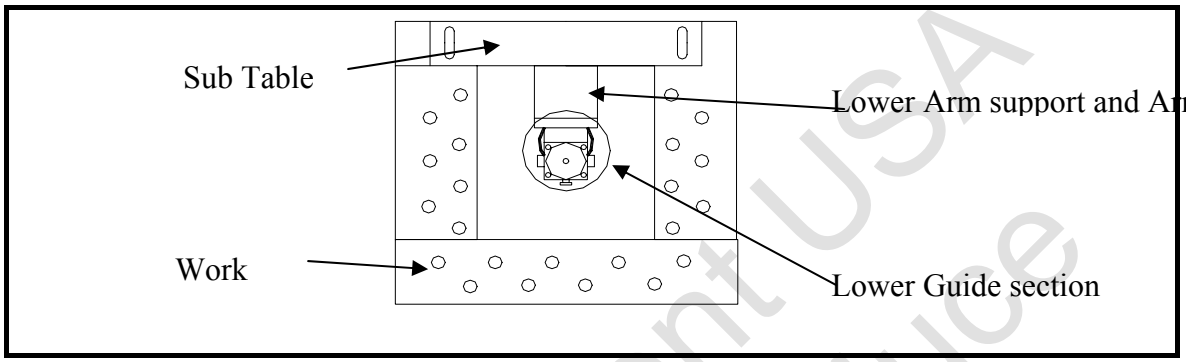

① Use dampcloth to wipe the table, sub table and lower support arm.

! Note

Use clean soft cotton cloth to wipe the extennal cover of lower support arm to prevent scratching.

② Set processing water level to 0.
③ Use a toothbrush to scrub the lower machine head and get rid of dirt.

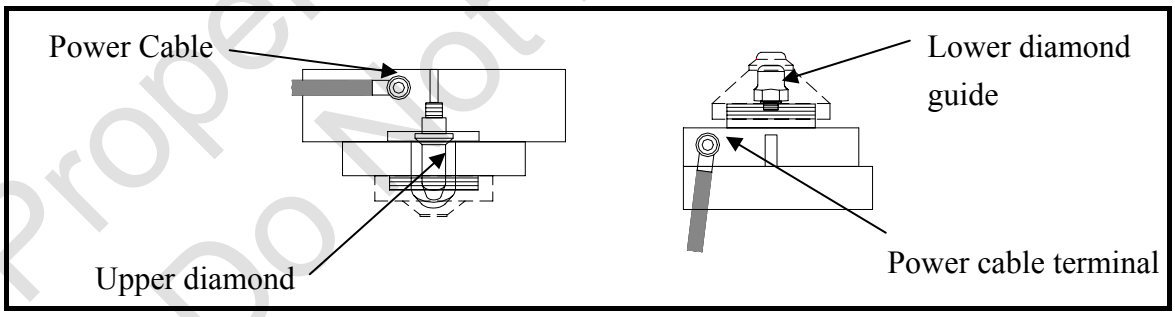

④ Remove the upper and lower flush nozzle and take out the diamond guides. Use toothbrush to clean the diamond guides.
⑤ Remove the Power cable terminals and use toothbrush to clean the contact surface.
⑥ Re-install flush nozzle and power cable terminals.

! Note

Please avoid using anti- oxide solvents or family detergents. When such substances are mixed into processing liquid, it will shorten the life span of ION- Exchanger Resin.

Property of Kent USA
Do Not Reproduce

17 Shut Down

（1） Press the red（EMEGY STOP）button which located at the left side of the monitor.

（2） Press the red OFF button,（at the right of the EMEGY STOP）Monitor will be off.

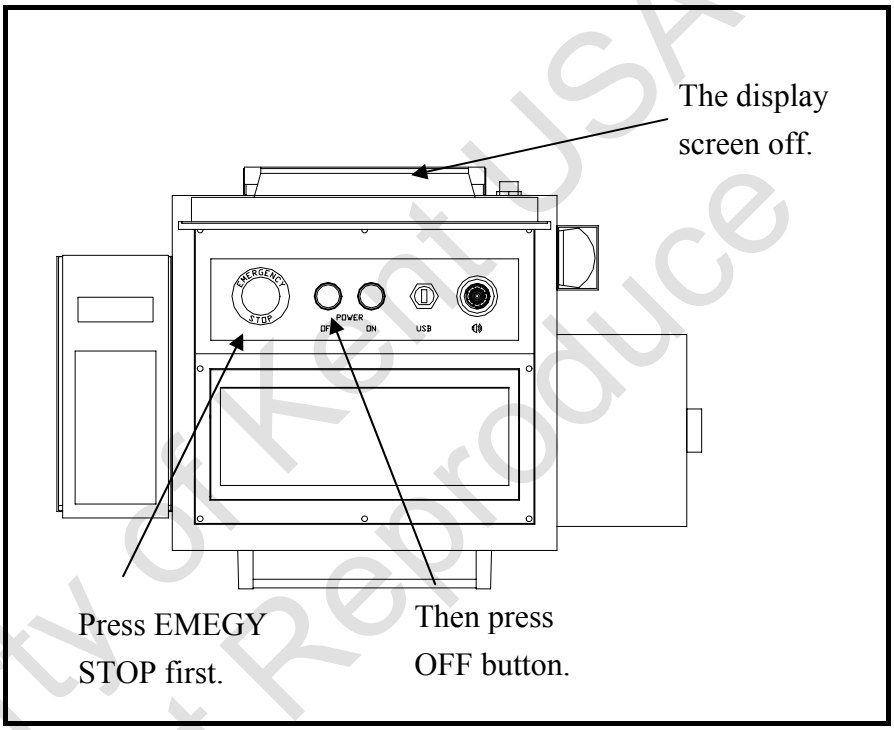

（3） If the machine has chiller installed, please also power off the chiller.

（4） Shut down the main power.

Turn the Main Power Switch to OFF position.

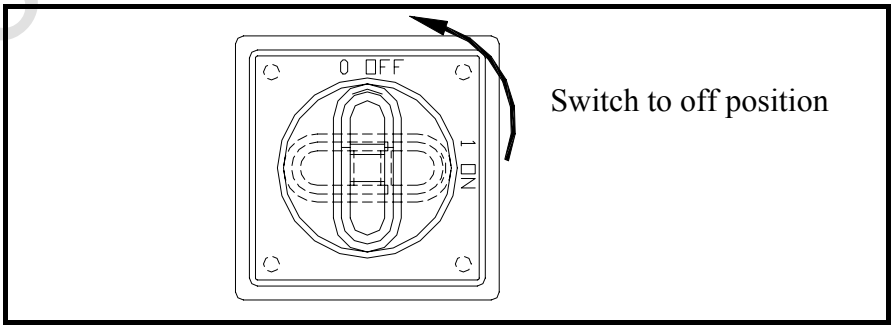

Property of Kent USA
Do Not Reproduce

V. Application Operation

Property of Kent USA
Do Not Reproduce

1 Perpendicularity Alignment

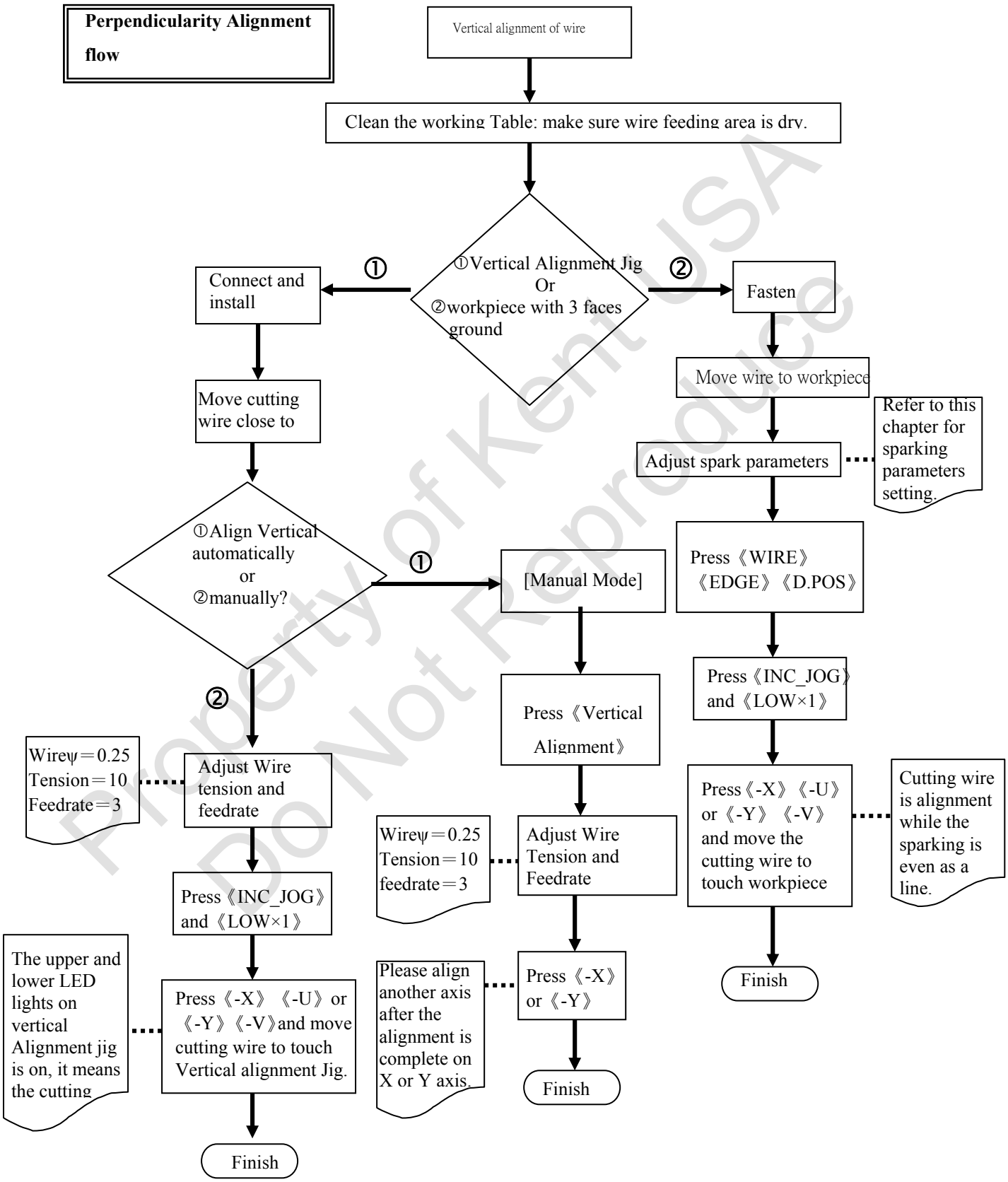

Property of Kent USA
Do Not Reproduce

The method of vertical adjustment is used for workpieces with 3 smooth and perpendicular sides. It utilizes the weak sparks between the cutting wire and workpiece for vertical adjustment. This method can also be used for one side vertical adjustment.

There are 2 methods to use Perpendicularity Rectifier to align:

1. Perpendicular Rectifier
2. Choose a precision 3- sides- perpendicular workpiece for side spark.

1.1 Perpendicularity Rectifier

There are 2 methods to use Perpendicularity Rectifier to align: Manual or Auto

✐ Hint

＊When the cutting wire touch the detection rims, the respective signal lights would light up. When both of the signals are active, the cutting wire can be considered as perpendicular.

＊The installation procedure of perpendicular rectifier applies to both manual and auto adjustment.

※Perpendicularity Rectifier install procedure.

① Blows dry the upper machine head and table with air gun

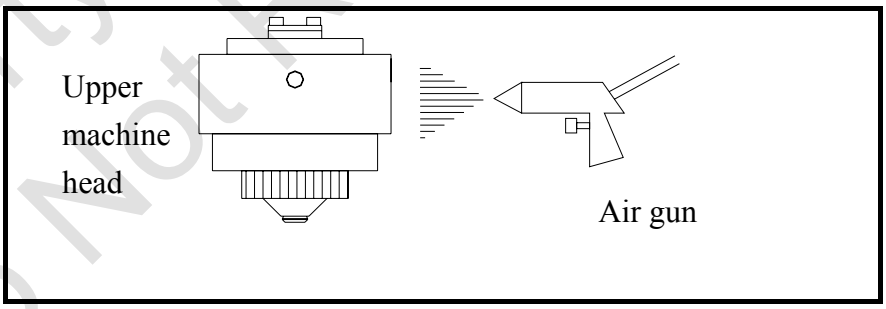

② Grind the machine table with millstone and wipe it clean with a damp cloth is necessary.

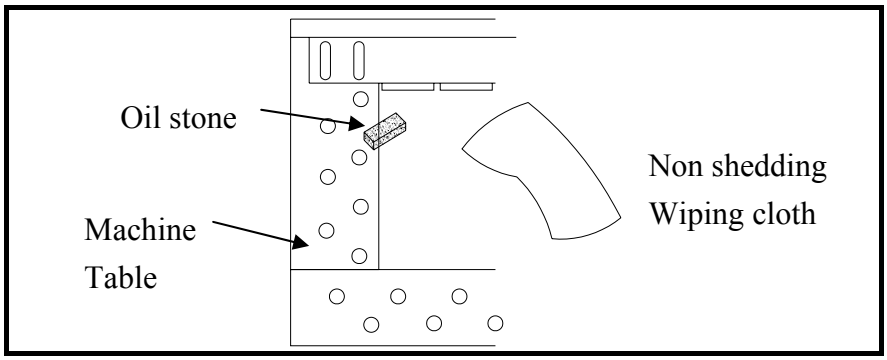

Property of Kent USA
Do Not Reproduce

! Note

The correct adjustment cannot be done if the moist remains and affects the signal lights from function properly.

③ Perpendicularity Rectifier

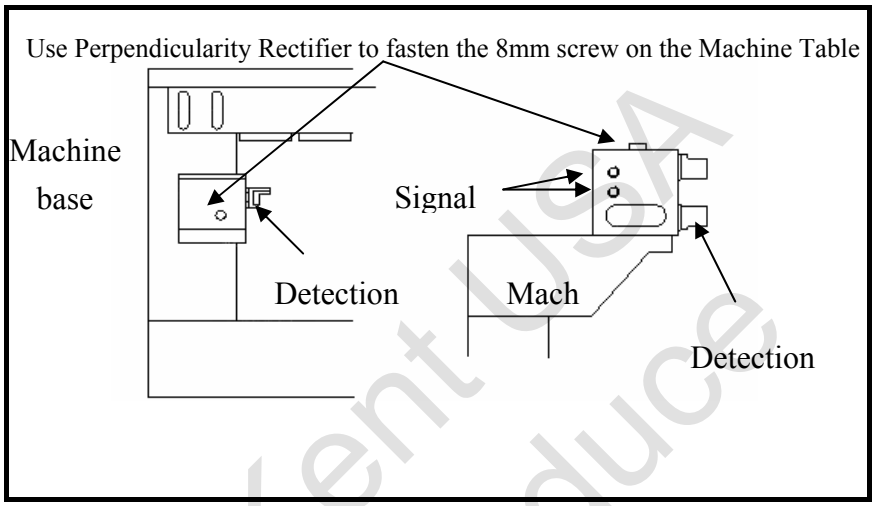

Tighten both clamping apparatus till there is no movement with hand push.

! Note

Because the Perpendicularity Rectifier is very fragile, please handle with care. Perpendicularity Rectifier can slant out of balance if it is only secured on one point. If《D. POS》is ON during alignment, the rectifier can be damaged easily.

④Pass cutting wire through upper and lower machine heads.

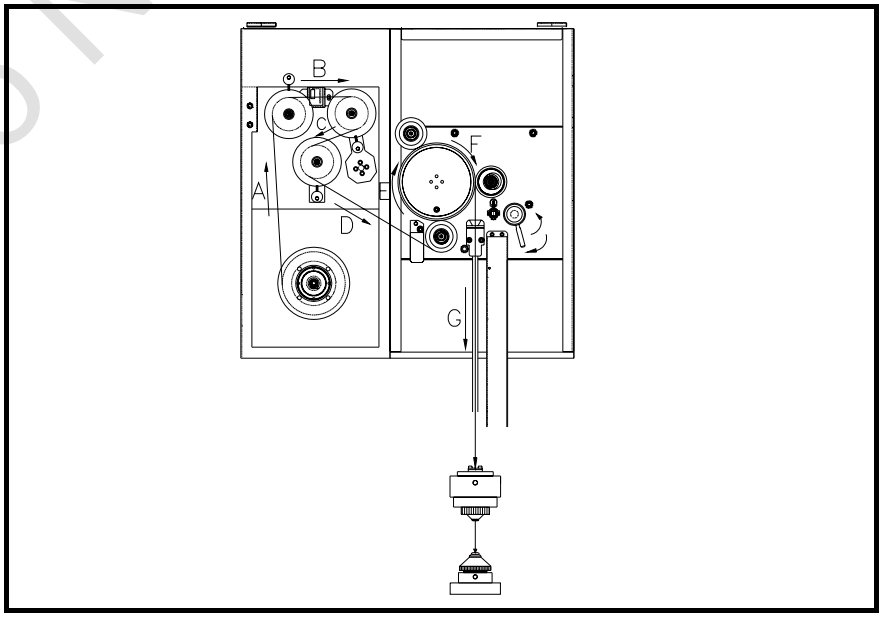

Property of Kent USA
Do Not Reproduce

⑤ Wire Tension and Feed rate is base on the diameter of cutting wire

Wire Diameter	Wire Tension	Feedrate
0.10 ㎜	5 （aprox.400g）	5
0.20 ㎜	9 （aprox.1300g）	5
0.25 ㎜	13（aprox.2000g）	5
0.30 ㎜	15（aprox.200g）	5

⑥ Move XY table till cutting wire close to the detection-end of Vertical Alignment Jig.

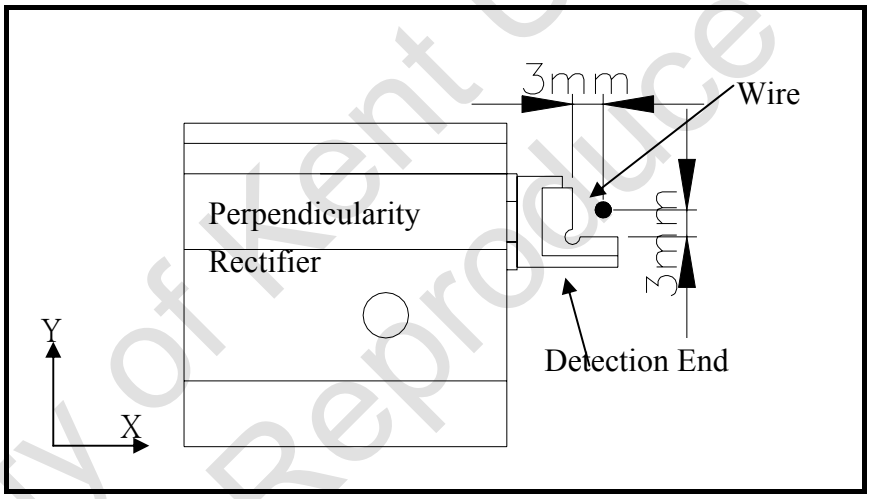

《JOG》《HIGH×100》
《－X》《＋X》
《－Y》《＋Y》

⑦ Lower the upper wire guide and close to Perpendicularity Rectifier

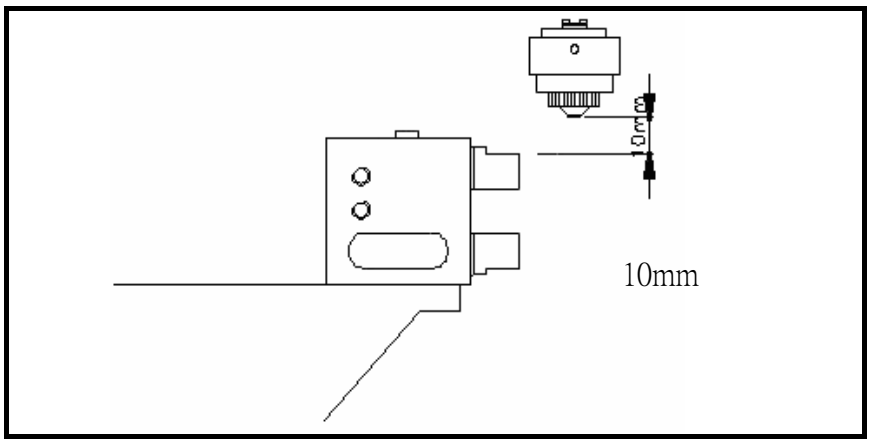

Property of Kent USA
Do Not Reproduce

⑧ Connect one end of cable to the perpendicularity rectifier.
Connect the other end to upper machine head.

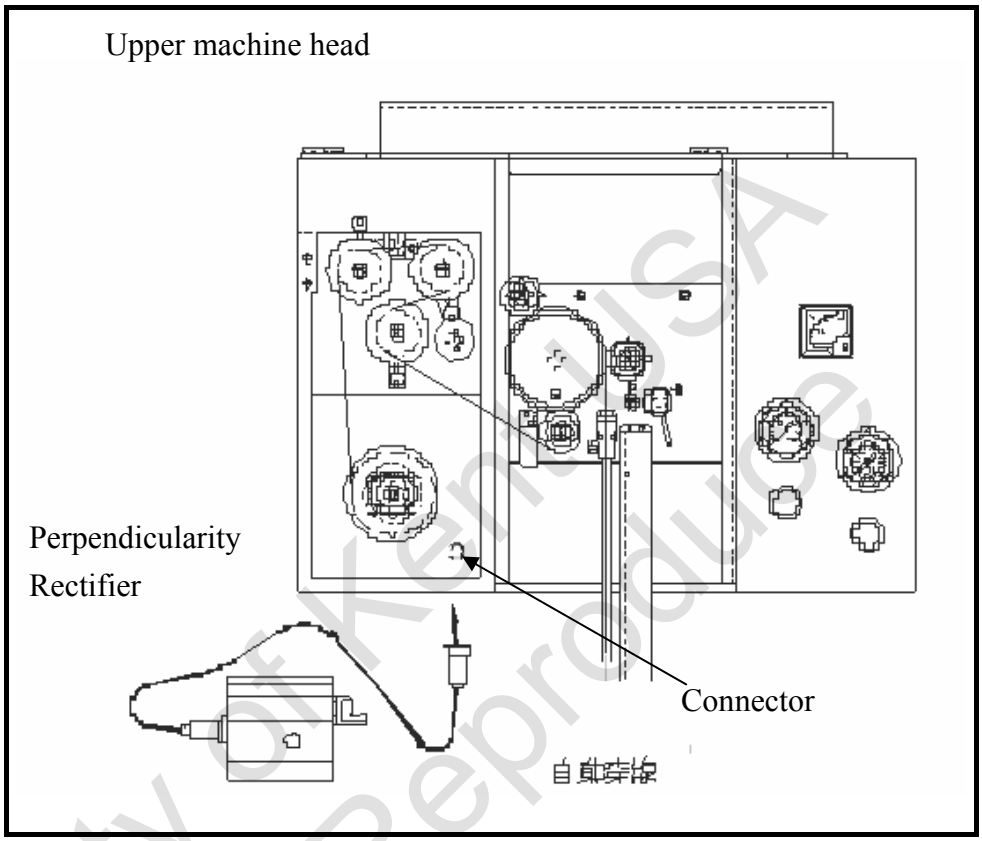

Property of Kent USA
Do Not Reproduce

1.1.1 Use Perpendicular rectifier for alignment

（1） Complete Perpendicularity Rectifier installation.
（2） Press【Manual】key to enter《Vert. Adjust》

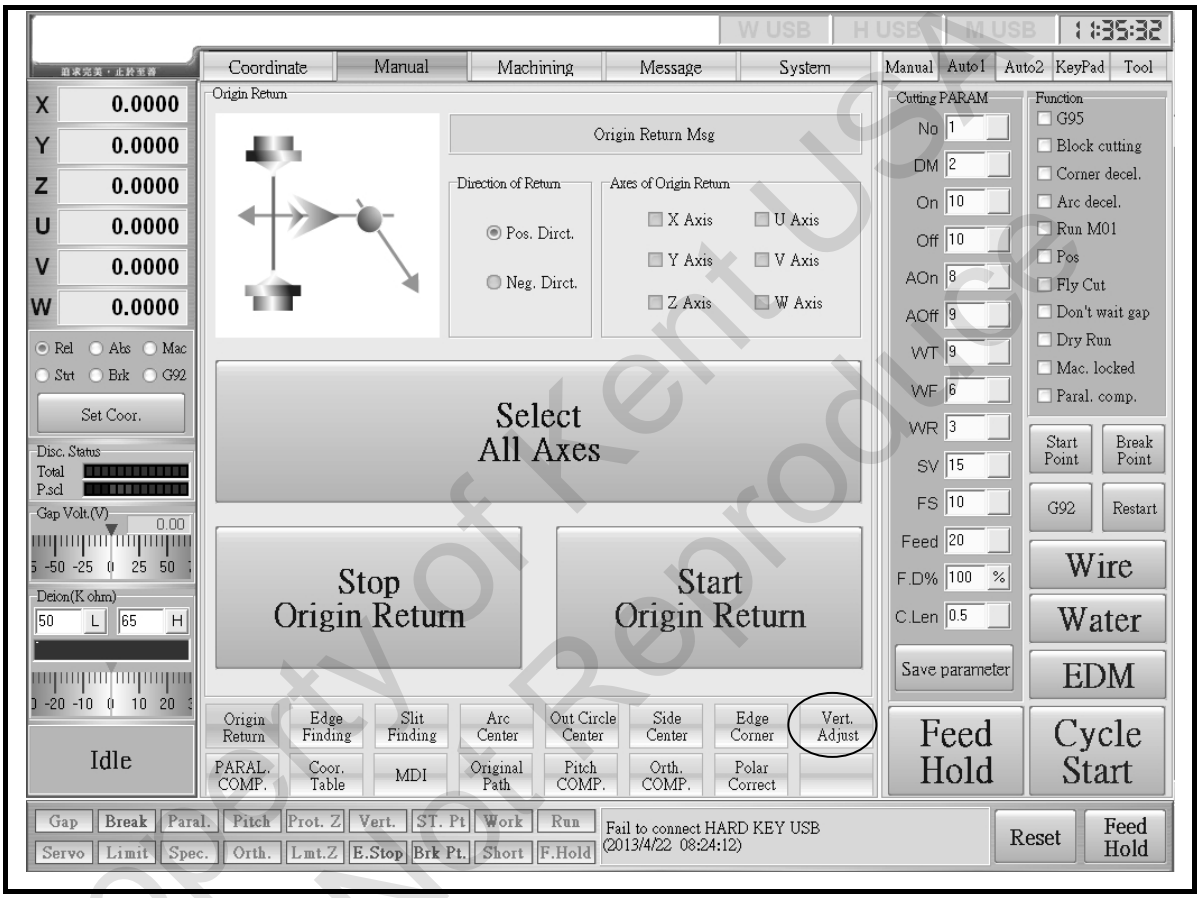

Property of Kent USA
Do Not Reproduce

（3） Click《Vert. Adjust》to enter the function.

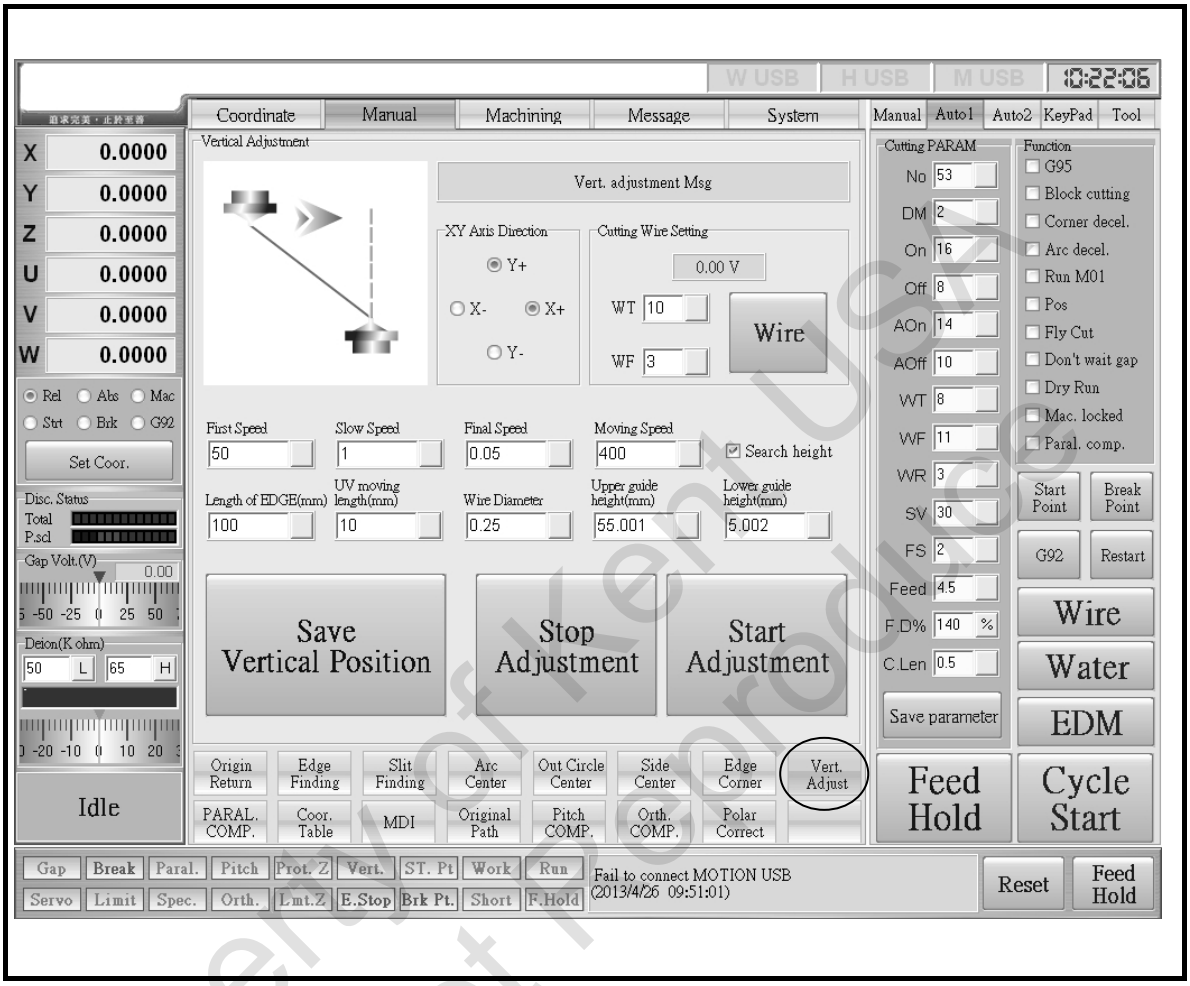

A. XY axis direction mode:

There are 4 types of mode: X+Y+、X+Y-、X-Y+、X-Y-。

B. Adjust Wire Tension and Wire Speed.

C. Height of machine head

Click“ ☑ Search height When running the perpendicularity alignment process, the computer system will update and show the height of upper and lower machine head

Cancel“ ☑ Search height When running the perpendicularity alignment process, the computer system will only show the vertical height of XY axis.

D. Setup Speed：Unit: mm/min

Reference to**11.1(3)**

Property of Kent USA
Do Not Reproduce

E. U、V axes movement

The max offset distance between U、V axes. When the value is over the limit, there will be an alert message and the operation will pause.

F. Diameter

Diameter of the wire will affect the height of upper and lower machine head. If replace different diameter during the perpendicularity alignment, parameter needs to be changed in order to get the same upper and lower machine head's height.

G. Height of upper and lower Jig

The distance between the Work table and upper and lower measurement point of the perpendicularity rectifier.

To get the correct height of upper and lower machine head during the perpendicularity alignment process, input the location parameter of upper and lower measurement point every time when using different perpendicularity rectifier.

1.1.2 Manual Alignment

Align X and U direction first

（1）Follow the procedures description above to complete Vertical Alignment jig installation

（2）Press《WIRE》key, select《INC_JOG》mode and set jog rate to《MED×10》.

《WIRE》 《INC_JOG》《MED×10》

（3）Press《－X》couple times till cutting wire close to detection edge, the respective signal lights on the perpendicularity rectifier will light up. When either of the signal lights up, press《＋X》to move cutting wire away from the detection edge. Press and hold《＋X》until the signal light off.

Property of Kent USA
Do Not Reproduce

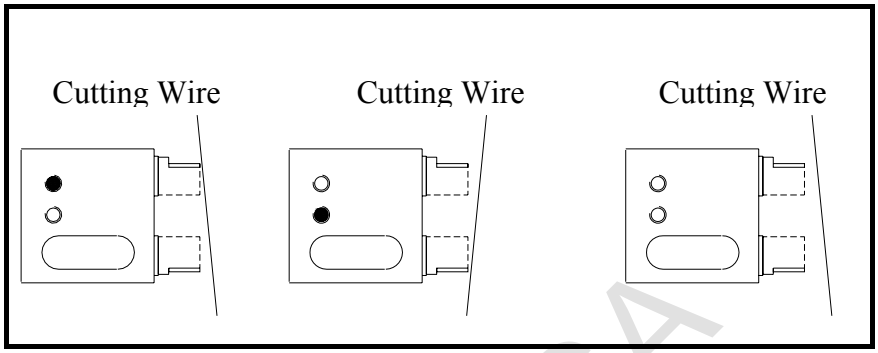

《－X》《－X》《－X》……
Press《＋X》when signal light is on.

（4）When the upper signal lights up, press《＋U》
When the lower signal lights up, press《－U》

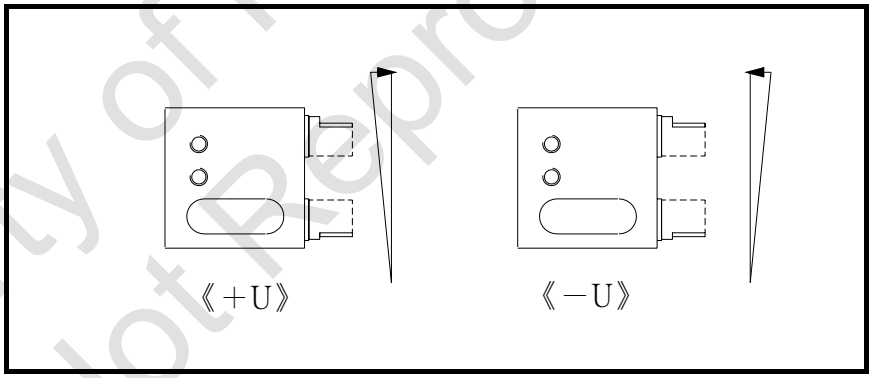

《＋U》or《－U》

（5）Press《－X》so that cutting wire close to detection edge.
When both signals light up, set the jog speed to《LOW×1》
Then go back to step（3）
If only one signal light is on, back to step（2）

Property of Kent USA
Do Not Reproduce

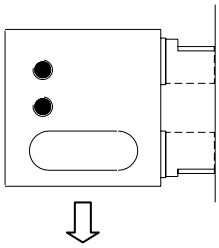 Set《LOW×1》， Repeat Step（3）。	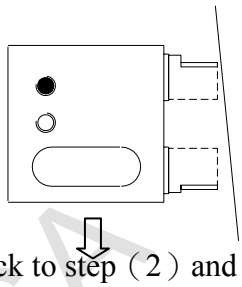 Go back to step（2）and test again.

《－X》
When both signals light up, set the jog speed to《LOW×1》. Then go back to step（3）.
If one of the light is on, repeat step（2）.

（6）Set jog speed to《LOW×1》（unit: μ） and have cutting wire close to detection edge. When both vertical setup signals light up, the perpendicular adjustment is completed.

（7）Vertical Coordinate Data Saving
After vertical Alignment is complete, the Vertical coordinate data has to be saved in to CNC controller. Press Vertical Coordinate Data Saving under Perpendicularity Alignment.

（8）After the X and U axis is completed, follow the same procedures with Y and V direction.

Property of Kent USA
Do Not Reproduce

1.2 Alignment by side burn on workpiece

The method of vertical adjustment is used for workpieces with 3 smooth and perpendicular sides. It utilizes the weak sparks between the cutting wire and workpiece for vertical adjustment. This method can also be used for one side vertical adjustment.

! Note

This method cannot be used for automatic Perpendicularity Rectifier.

（1）Prepare a workpiece with more then 3 surfaces. The plane level and verticality should have a fair precision around(3to5μm).

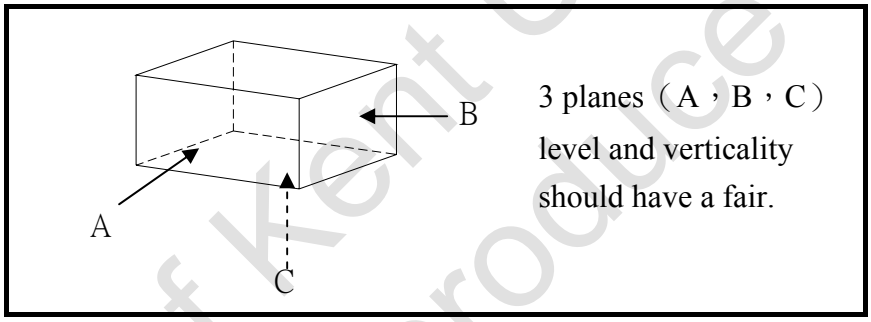

（2）Blow dry moisture on machine head and table surface with an air gun.

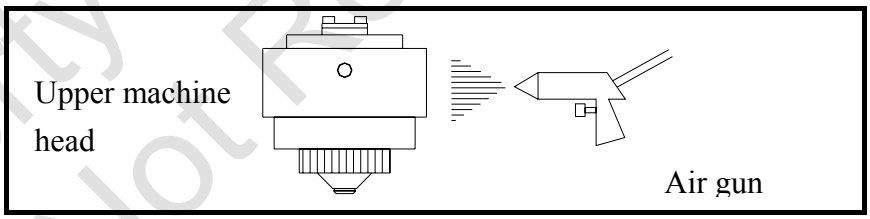

! Note

If water or moisture exists, the discharge would appear on the damp parts and adjustment would not be precise.

(3) With a millstone, smooth the table surface where the perpendicular rectifier has to be installed.

The wipe it clean with a non- shedding cloth.

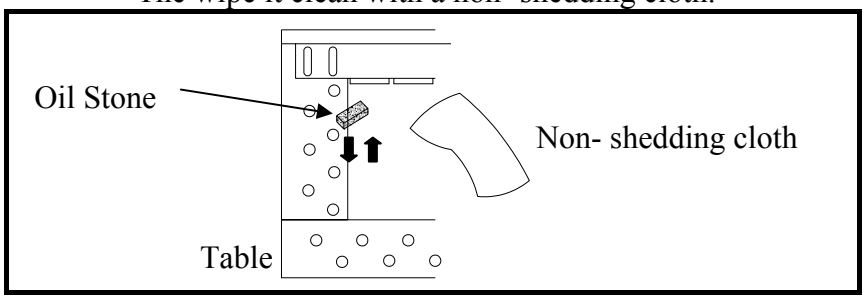

Property of Kent USA
Do Not Reproduce

（4）Set up the workpiece according to the following diagram in order to perform rectification. Please check that side C is the base, A is the front and B is the right side.

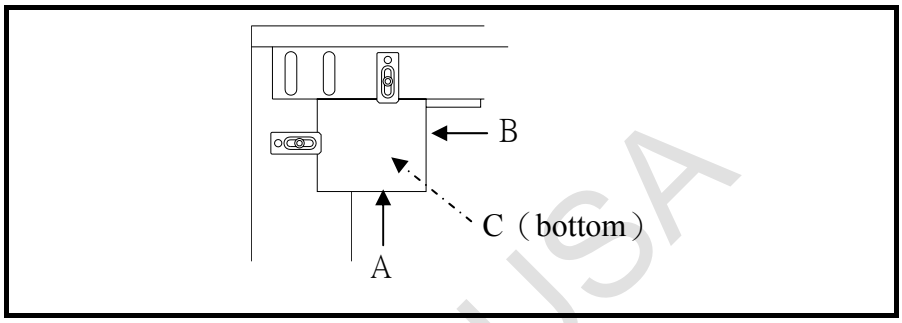

！ Note

The workpiece must be secured on two points. If not, the workpiece may slant out of balance.

（5）Move X-Y- shaft until it is close to the workpiece.

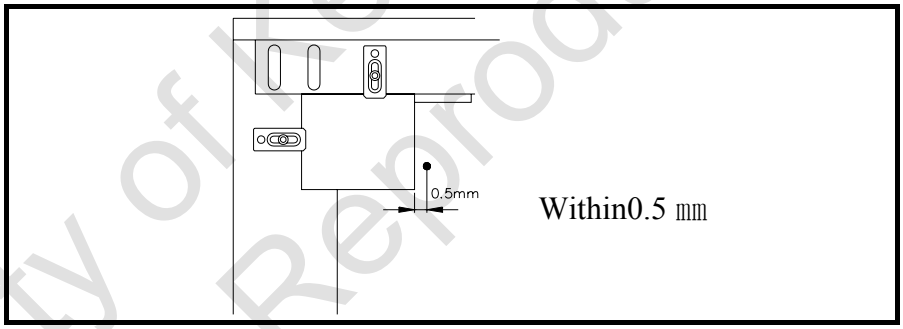

《JOG》《HIGH×100》
《－X》《＋X》《－Y》《＋Y》

（6）Spark Parameters Setting

DM	FINE1
ON TIME	1
OFF TIME	50
ARC ON TIME	1
ARC OFF TIME	52
Servo Voltage	28
Wire Tension（Refer to the table on the right）	
Feed rate	5
Water Pressure（0: close the adjustment valve）	

Wire Tension	
0.10 ㎜	5 （400g）
0.20 ㎜	9（1300g）
0.25 ㎜	11（1700g）
0.30 ㎜	13（2200g）

Property of Kent USA
Do Not Reproduce

✐ Hint

Set the water pressure equal to 0, close water valve. Make sure there is no water comes out from upper and lower head.

（7）Set《D.POS》to ON.

《D.POS》

（8）Set《WIRE》，《WATER》and《S.EDGE》to ON

《WIRE》《WATER》《S.EDGE》

⌦ Danger

Cutting wire contains high voltage at this point. Do not touch copper wire or risk the danger of an electric shock.

（9）Set jog speed《INC_JOG》and《MED×10》, press《－X》to move copper wire to workpiece and a weak discharge will pass through the wire.

Examine discharge situation.

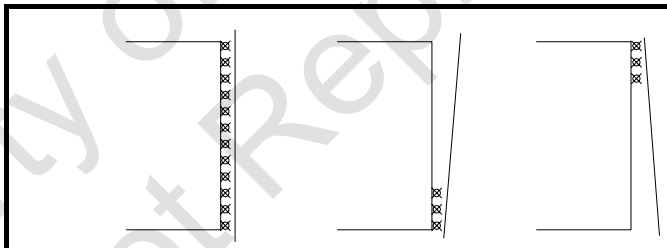

《INC_JOG》《MED×10》《－X》

（10）Adjust U- Shaft for an even discharge.

Adjust Y- Shaft and V- Shaft according to the same method.

（11）Set up perpendicular position

✐ Hint

After perpendicular adjustment is finished, save into CNC. Once the data is saved, press《VERT》under《JOG》or《INC_JOG》 mode, move alone U and V Shaft and can back to perpendicular position.

Property of Kent USA
Do Not Reproduce

1.3 Manual Vertical Alignment

（1）Set the Wire close to the rectifier.

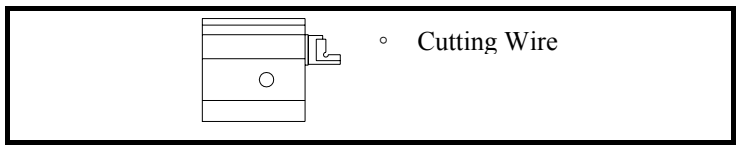

（2）Press《FUN》key on the remote control，the light on《FUN》key will light up.

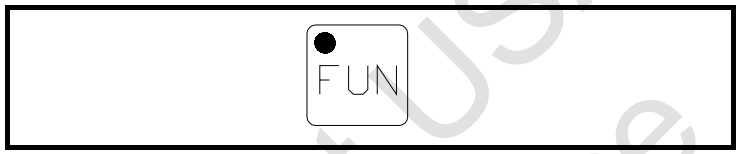

（3）Press《MODE》on the remote control,【Manual】mode will appear on the monitor. Press《MODE》again, and select《Perpendicular Alignment》

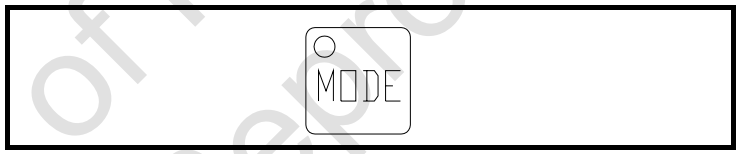

（4）Check the setup speed, wire and other parameters.

（5）Press《START》to start Edge Find.

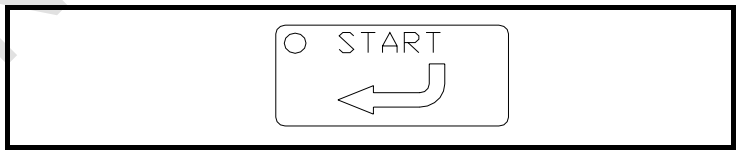

（6）Press《HOLD》on the remote control to stop.

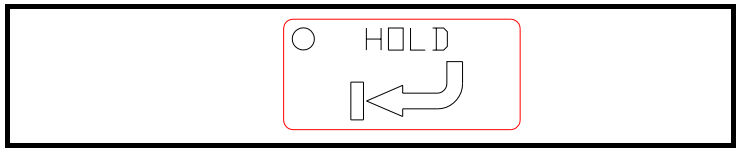

Property of Kent USA
Do Not Reproduce

2 Calculation of Workpiece Tilt.

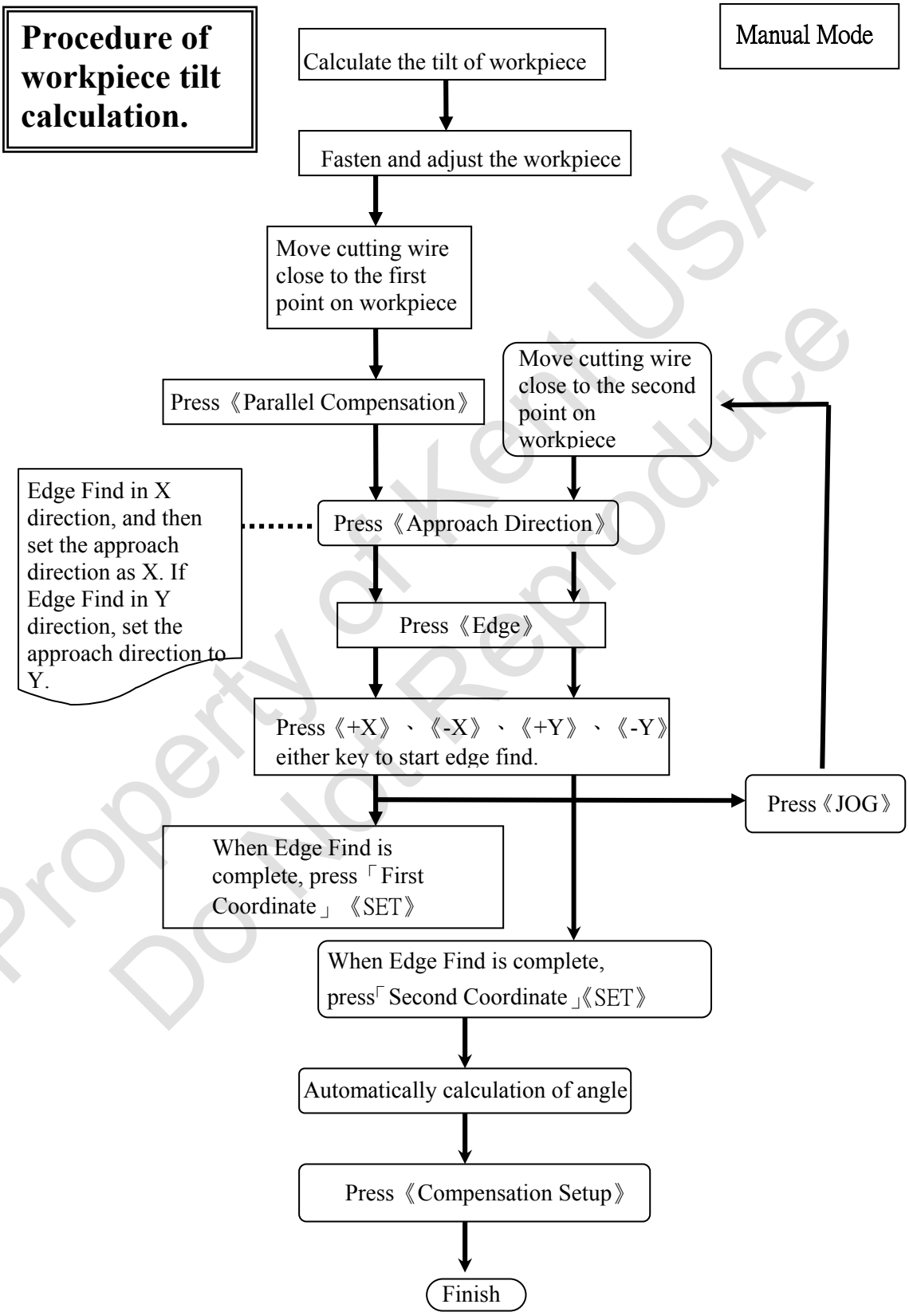

Property of Kent USA
Do Not Reproduce

Auto Mode

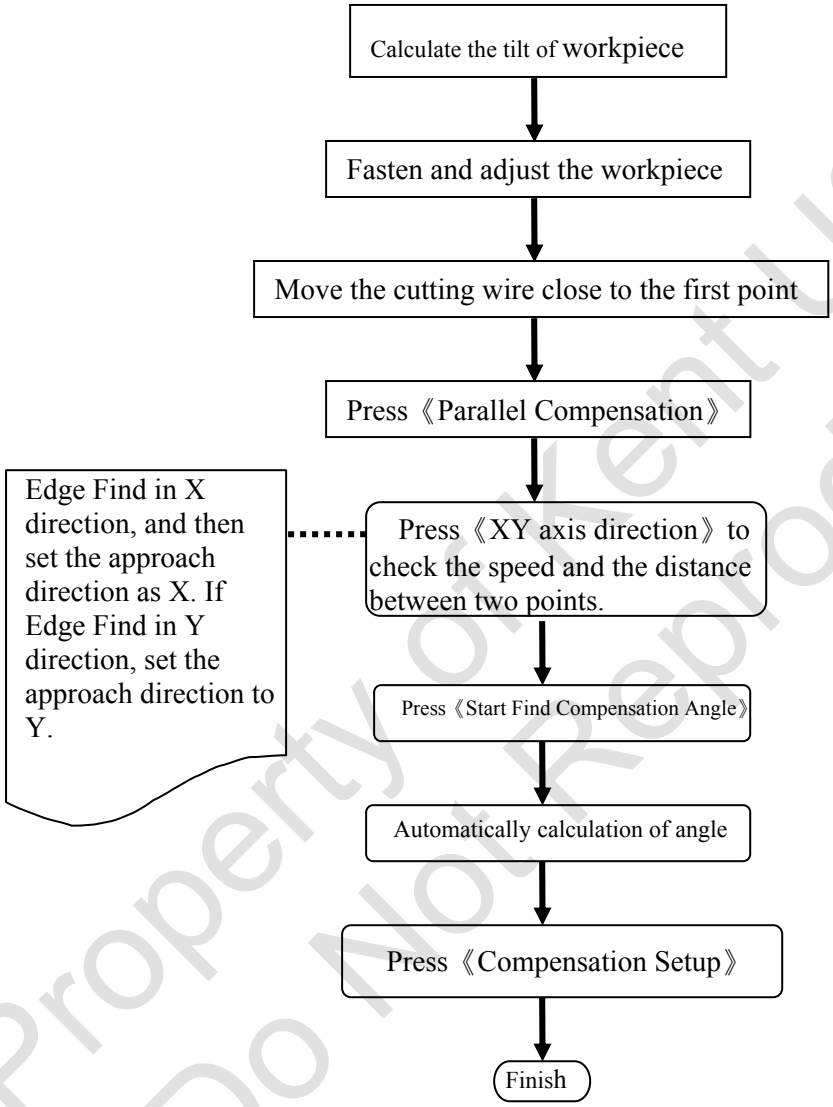

Property of Kent USA
Do Not Reproduce

Parallel compensation can determine the tilt of the installing workpiece, indicator do not need to be used.

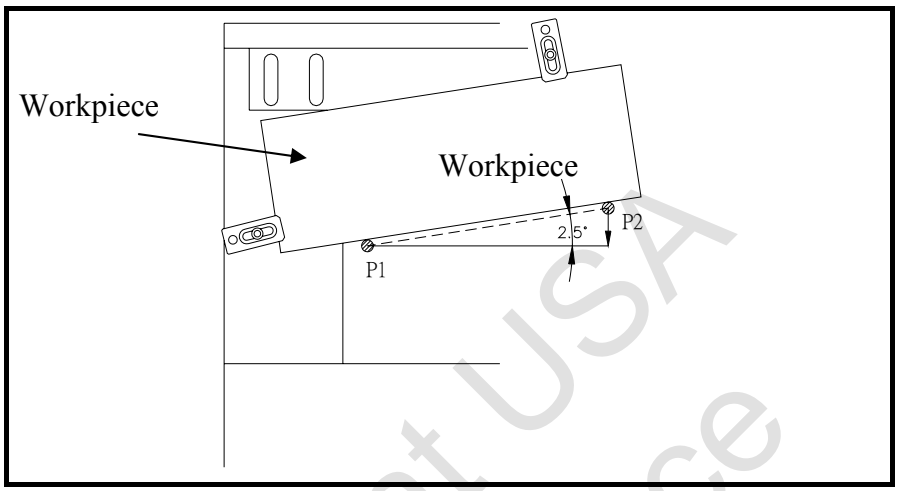

Base on the figure, P1 is fixed. By moving P2 up and down can determine the tilt of the workpiece.

2.1 Operation of Parallel Compensation

（1）Install the workpiece on the work table, and then adjust the parallel tilt.

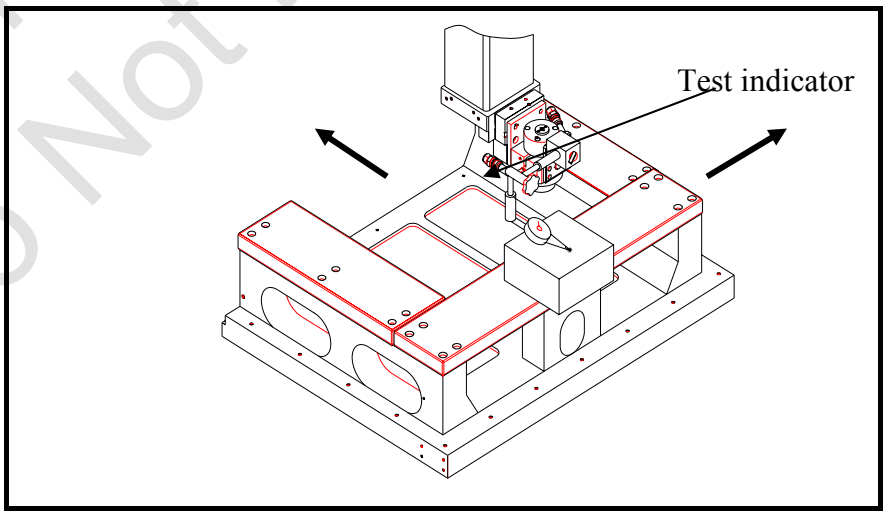

Property of Kent USA
Do Not Reproduce

（2）Press【JOG】, and set the cutting wire to base plane.

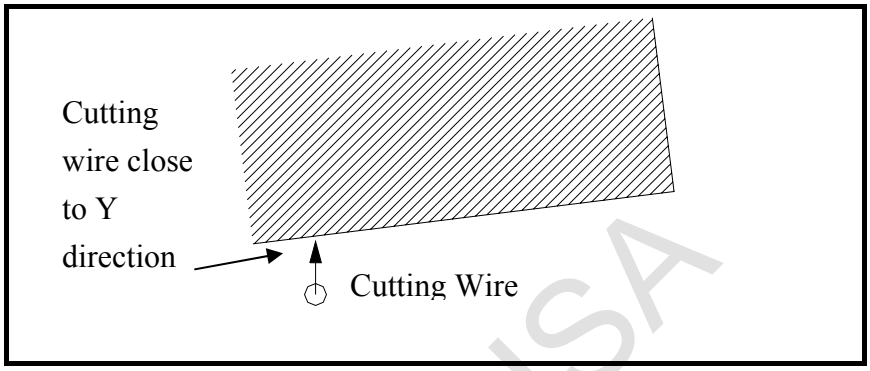

《JOG》《HIGH×100》
《－X》《＋X》
《－Y》《＋Y》
Operate Edge Find Positioning（Refer to section 4.11.1(3)）
【Manual】→《EDGE》→《WIRE》→《Y+》

（3）Press《PARAL. COMP.》under【Manual】

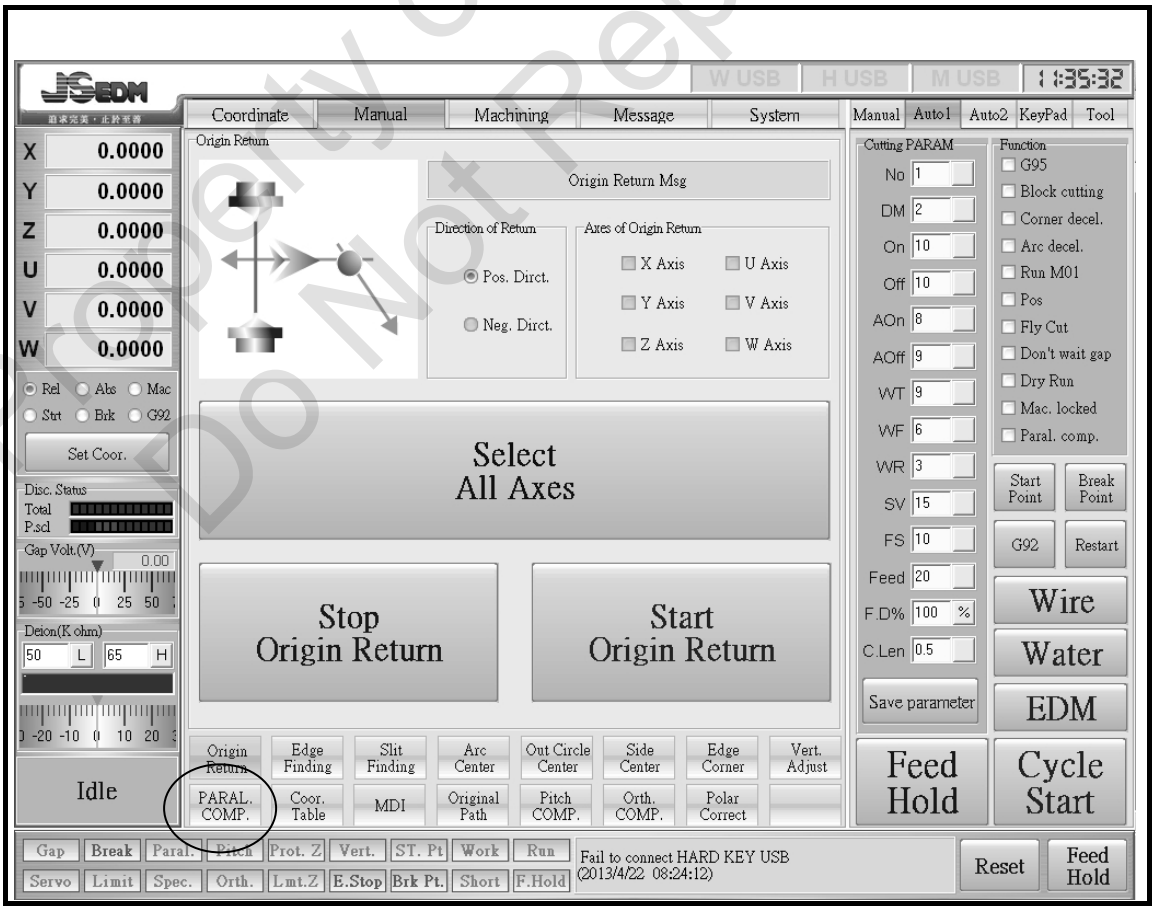

Property of Kent USA
Do Not Reproduce

（4）Press《PARAL. COMP.》 to enter the function.

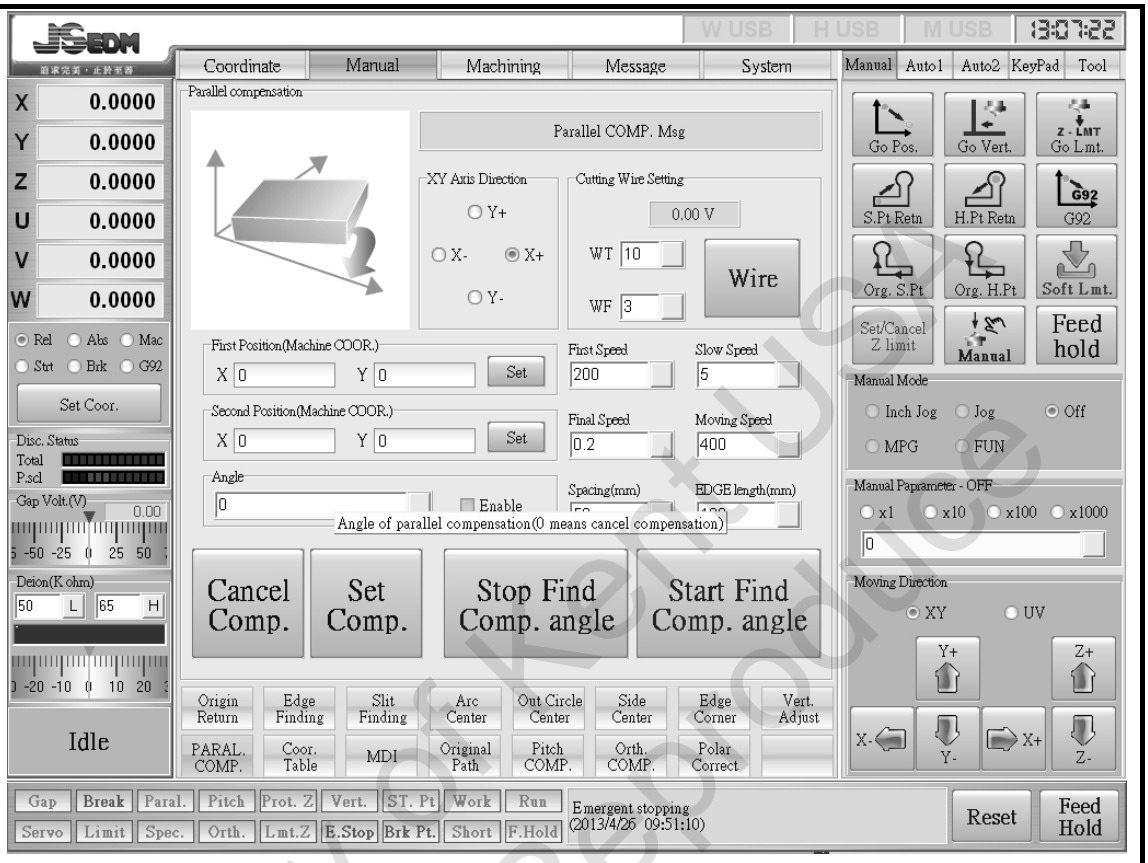

Screen description：
① XY axis direction：Set the Edge Find direction.
②First Position：Save the first coordinate.
③Second Position：Save the second coordinate.
④Angle：Display the value of angle.
⑤CuttingWire Setting：The setup value during Edge Find.
⑥Setup speed：Refer to Section 4.11.1(3)
⑦2 pitch：The moving distance where the machine moves to the second point during the auto compensation angle find process.
⑧Start & Stop Compensation Angle Find：Start or Stop the function.
⑨Set& Cancel compensation function：Display ON

Function：
①Press「First Position」《Set》, the first coordinate can be saved.
②Press「Second Position」《Set》, the second coordinate can be saved.
③Press「XY Axis Direction」to switch the direction. EX：PressX-DIR to switch fromY-DIR to X-DIR, press Y-DIR again to switch back.
④《Angle》Calculate the angle between two points.

Property of Kent USA
Do Not Reproduce

（5）Press《XY Axis Airection》, to setup the direction where the cutting wire is closed to the workpiece. EX: Set Y direction as Y+.

! Note

There will be a 90° error if the setup direction is incorrect.

（6）Press《EDGE》, after Edge Find is done, press「First Position」《Set》to save the first point which is close to the workpiece.

（7）Select《JOG》to return【JOG】Mode.
Starts from the point by Edge Find, move the cutting wire alone the workpiece surface.

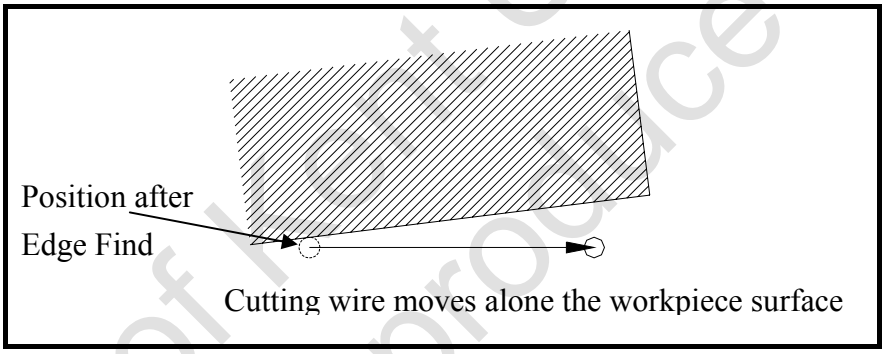

《JOG》《HIGH×100》
《＋X》

（8）Press《EDGE》, after Edge Find is completed, press「Second Position」《Set》, to save the second point which is close to the workpiece.

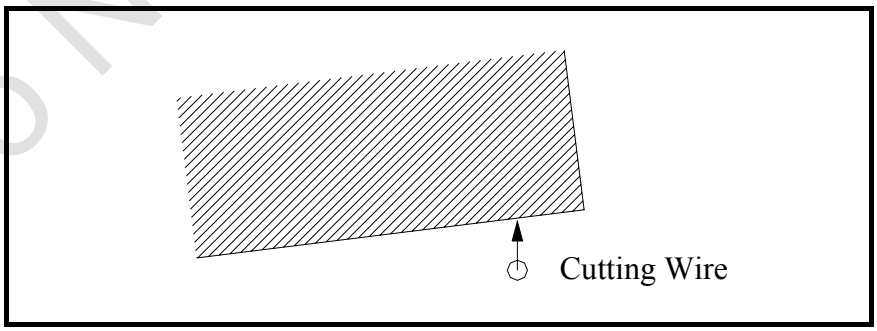

（9）When the two coordinates are saved, the angle of the two points will be determined.

（10）After angle calculation is completed, press《Set & Cancel Compensation》to turn on/ off the parallel compensation.

Property of KENT USA
Do Not Reproduce

✐ Hint

While the parallel compensation is on, the machine will move alone the tilt angle of the workpiece.

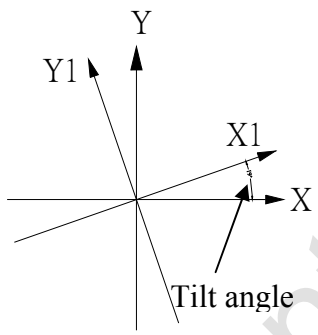

Before starting parallel compensation, XY table will move alone the X and Y direction. After starting parallel compensation, XY table will move alone the X1 and Y1 direction.

✐ Hint

To get a high accuracy tilt angle, the value of the 2 pitch needs to be

! Note

.

∗Choose a smooth surface for positioning.
∗Please close the parallel compensation function when the machining is complete or other issue occurs.
∗Please use the parallel compensation when changing new workpiece. Make sure to re-calculate the slope and then start the parallel compensation function.

Property of Kent USA
Do Not Reproduce

2.2 Parallel Compensation on the remote control

（1）Set cutting wire close to workpiece.

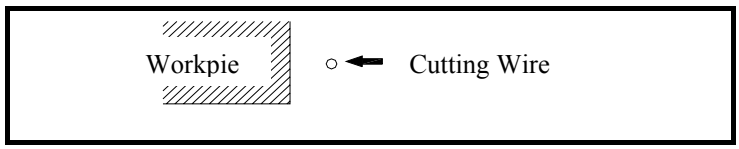

（2）Press《FUN》on the remote control，《FUN》key will light up.

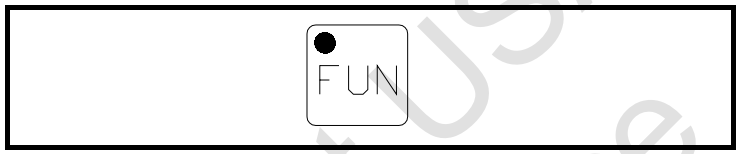

（3）Press《MODE》on the remote control,【Manual】mode will display on the screen. Press《MODE》to enter《PARAL. COMP.》screen.

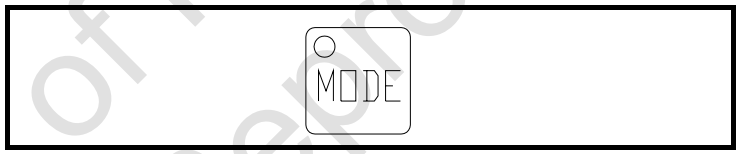

（4）Press《+X》《－Y》《－X》《＋Y》keys to select the direction of XY on the screen.

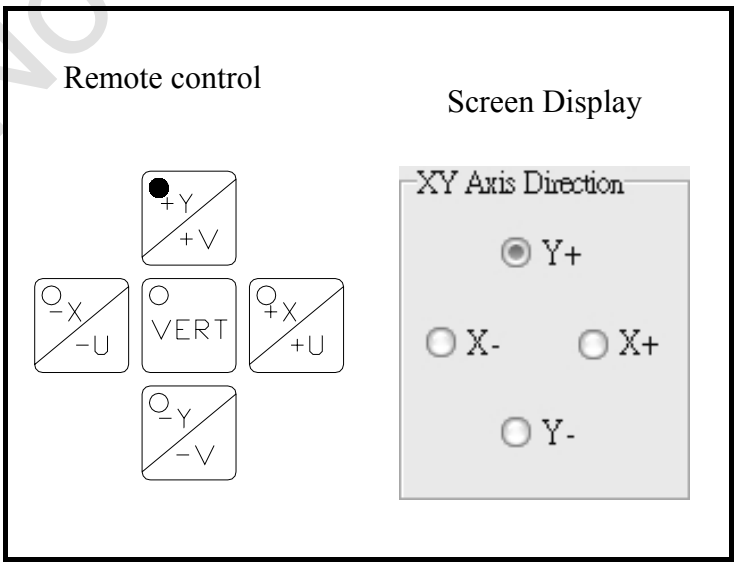

Property of Kent USA
Do Not Reproduce

（5）Check the setup working wire, speed and other parameters.

（6）Press《START》on the remote control to start Edge Find.

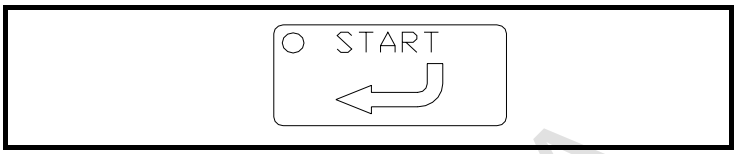

（7）Press《HOLD》on the remote control to stop.

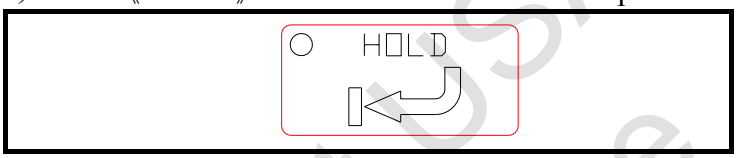

Property of Kent USA
Do Not Reproduce

3 Return to machine Origin

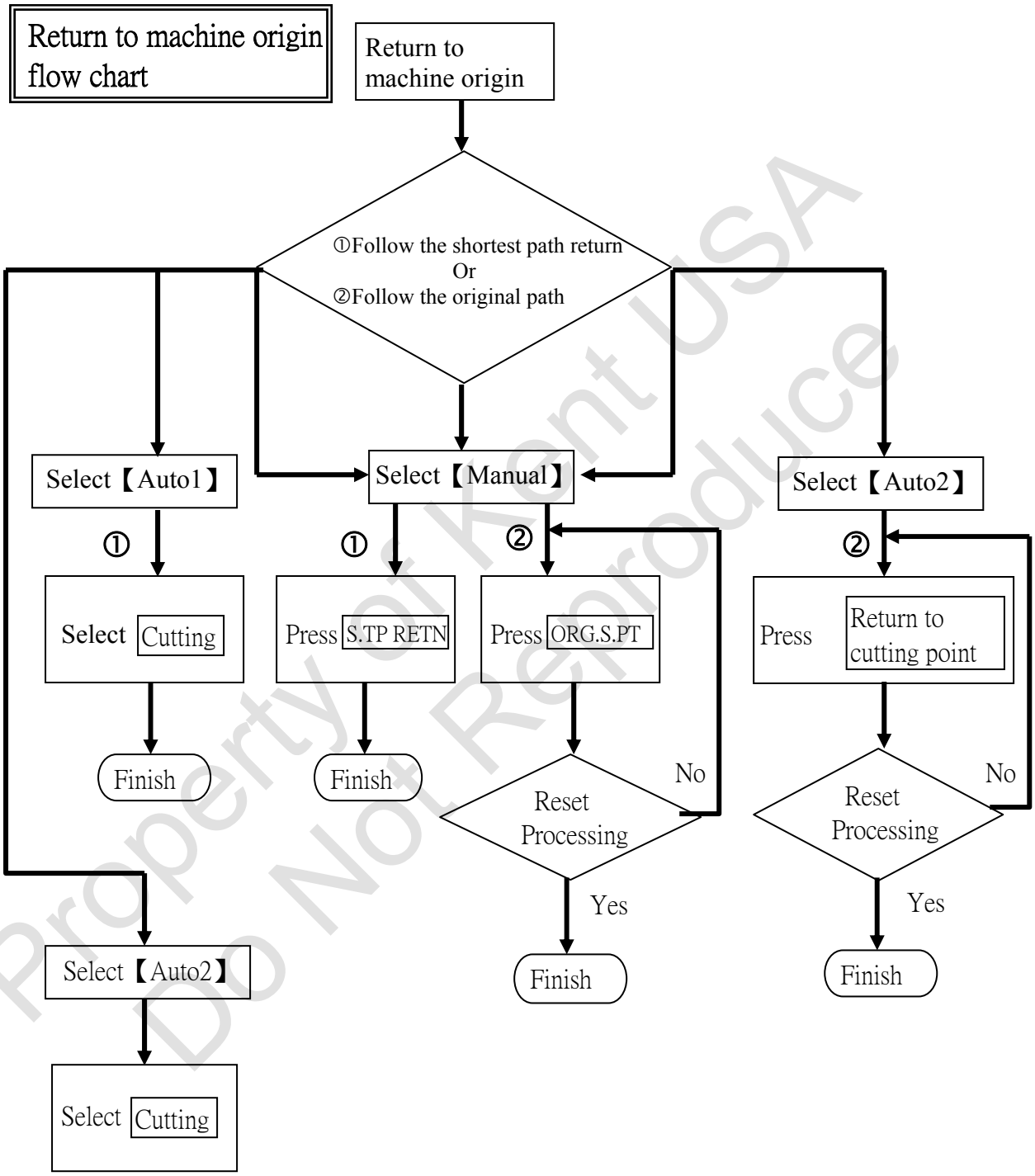

Property of Kent USA
Do Not Reproduce

3.1 Follow the shortest path return Machining start Cutting Point

（1） 4 ways to return starting point:

A. 【Manual】Mode：Press S.PT RETN

B. 【Auto1】Mode: Press Start point

C. 【Auto2】Mode：Press Start point

D. Press S.TP RETN on the remote control.

（2）Press《S.PT RETN》. Cutting wire will return to original point following by the shortest path.

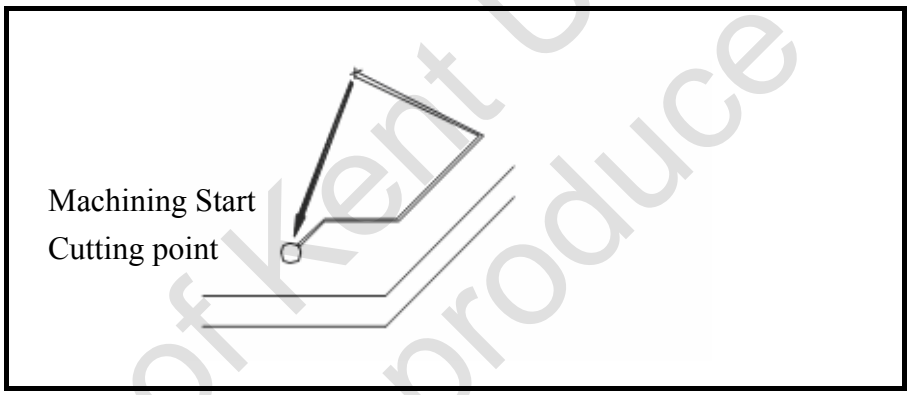

《S.PT RETN》

✐ Hint

This method can be considered as a“Fast Return Machine Origin”

3.2 Follow the original path return Machining Start Point

This function is used on Machining Start Point when machining is interrupted.

！ Note

If this function is not used on Machining Stop Point (broken wire point), the alarm would be ON and the cutting wire won’t be back to Machine origin Point.

（1） There are 3 type of original path return to Machining Start Cutting point.

A. 【Manual】Mode：Select ORG.S.PT 。

B. 【Auto2】Mode：Select Org. Path return Start Pt.

C. Press ORG.S.PT on the remote control

Property of Kent USA
Do not Reproduce

（2）Set《WIRE》（during the threading）to ON.

《WIRE》 《EDM》or《WATER》cannot be ON.

（2） Press《ORG.S.PT》and press OK to start Reset Machining. At this point, the cut wire will return to the machining start point alone the current machining path and "Original path return to the cutting point" will appear on the screen.

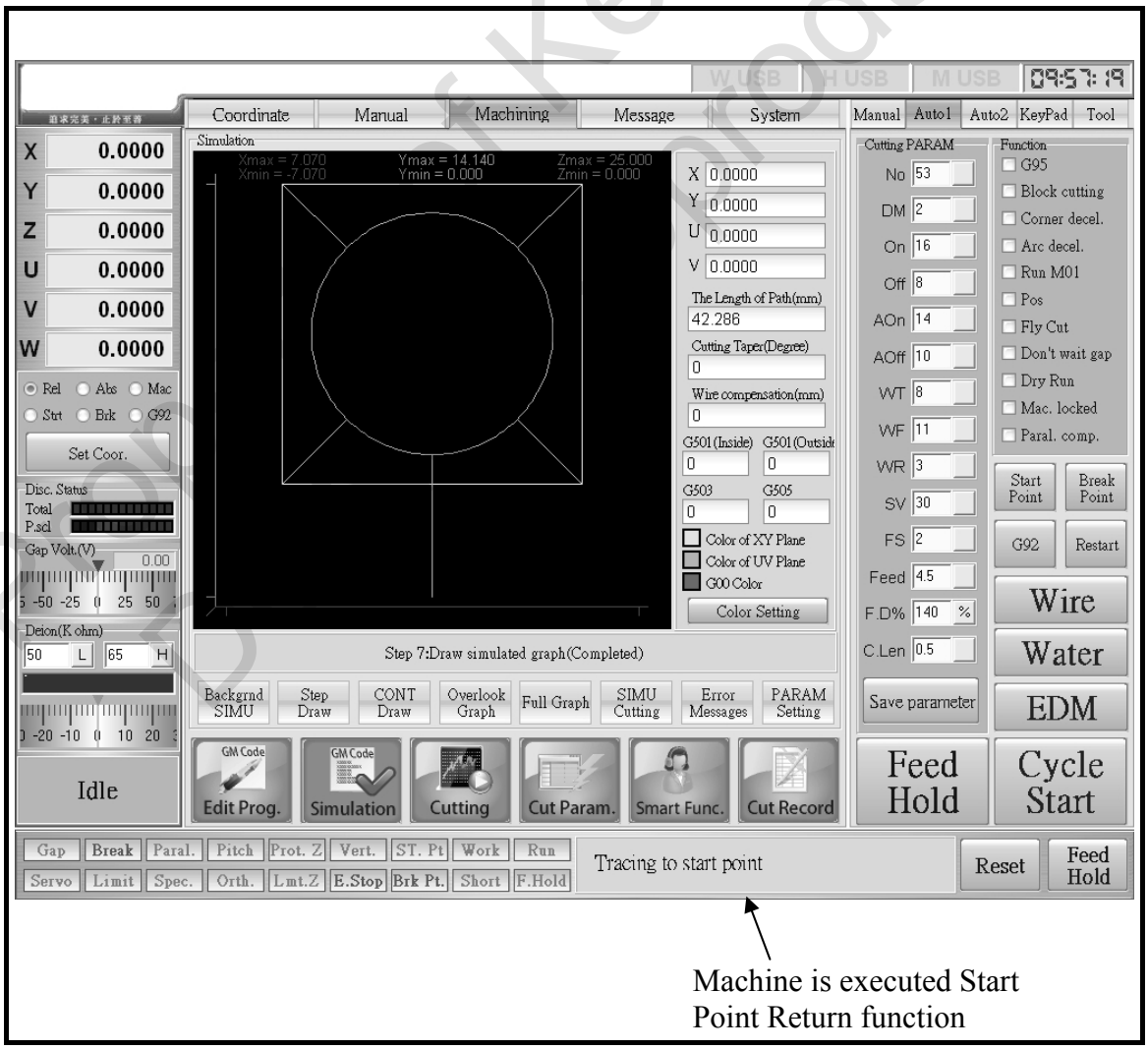

Property of Kent USA
Do not reproduce

《ORG.S.PT》

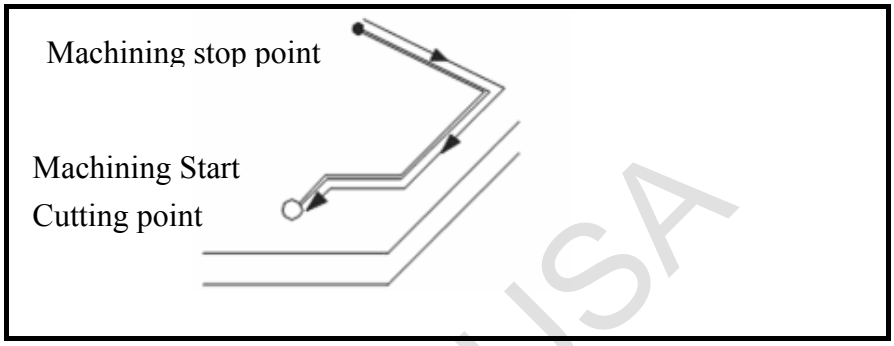

! Note

If the cutting wire has to retract follow by the path with sharp corner, the cutting wire might be broken on that area.

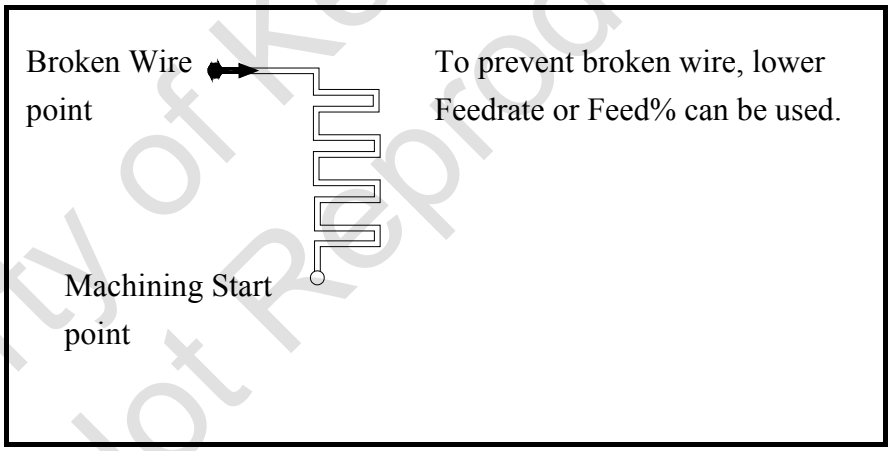

To prevent broken wire, lower Feedrate or Feed% can be used.

Property of Kent USA
Do Not Reproduce

4 Broken Wire Retract

Broken Wire Retract Flowchart

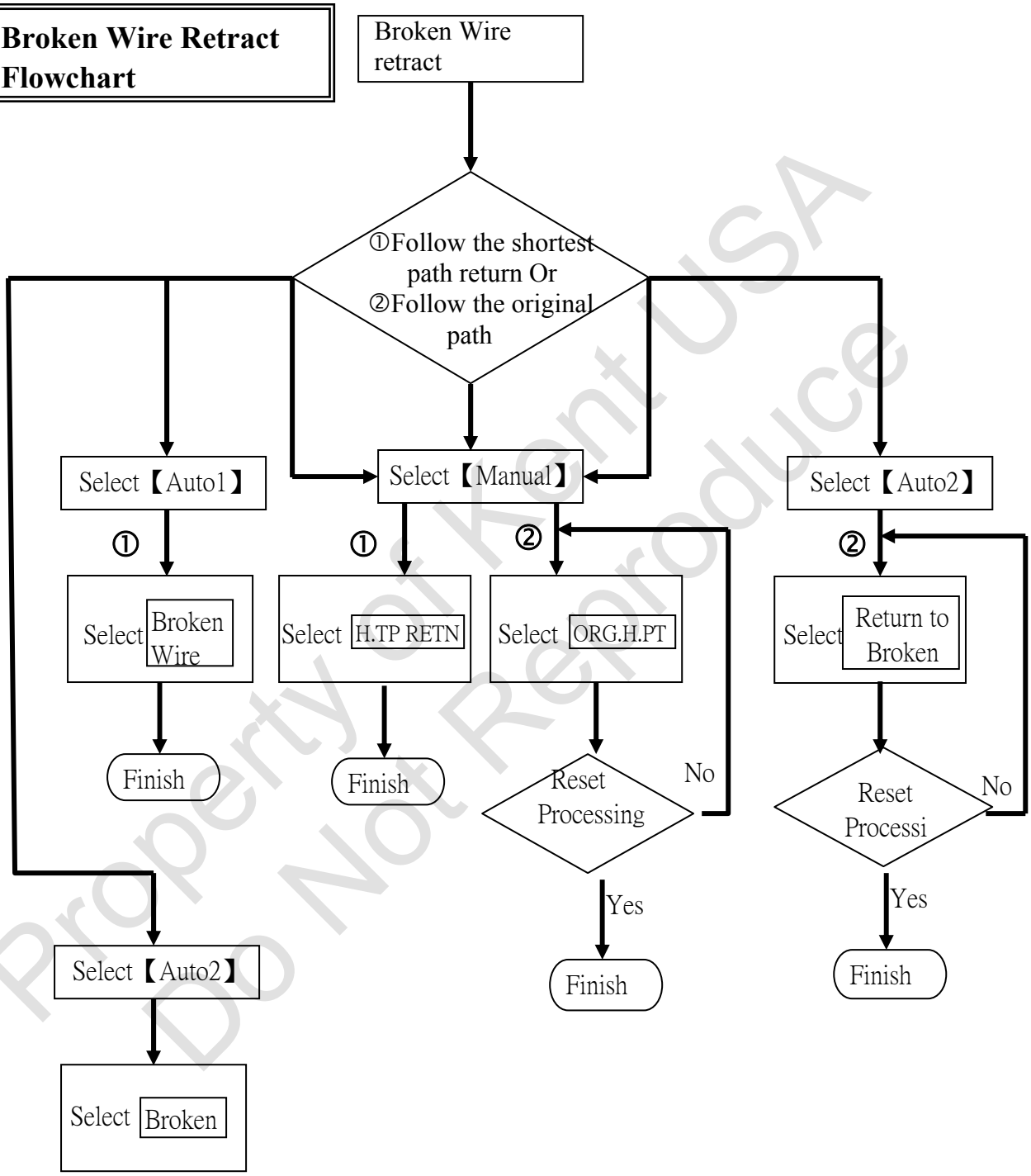

Property of Kent USA
Do Not Reproduce

CNC will save the position of broken wire or《HOLD》position. By pressing《H.PT RETN》 can move the cutting wire back to position for continuing machining.

4.1 Follow the shortest path return Machining Broken Wire Point

（1） 4 ways to return broken wire point:

A. 【Manual】Mode：Press H.PT RETN

B. 【Auto1】Mode：Press Break Point

C. 【Auto2】Mode：Press Break Point

D. Press H.TP RETN on the remote control

（2）Press《H.PT RETN》Cutting wire will return to broken wire position following by the shortest path.

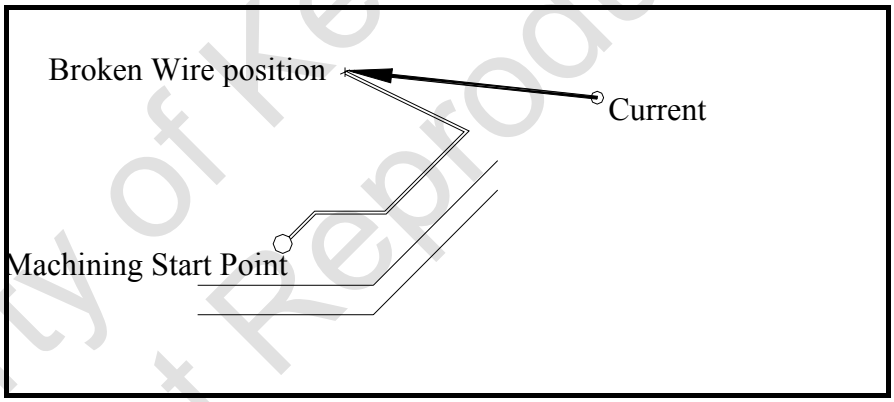

《H.PT RETN》

! Note

While the cutting wire is still in the upper and lower guide, this function cannot be executed.

✐ Hint

This function can be considered as“Fast Hold Retract”.

Property of Kent USA
Do Not Reproduce

4.2 Follow the original path return to broken wire

The function is used for retract to broken wire point.

! Note

If this function is not used on Machining start point, the alarm will be on and the cutting wire won't retract to broken wire

（1）Follow the original path return to original point.

A. 【Manual】Mode：Press ORG.H.PT

B. 【Auto2】Mode：Press Org. Path Break Pt..

C. Press ORG.H.PT on the remote control

（2）After wire feeding, press《WIRE》to wind the wire.

《WIRE》

（3）Press《ORG.S.PT》and press OK to start Reset Machining. At this point, the cut wire will return to the machining start point alone the current machining path and "Original path return to the broken wire point" will appear on the screen.

Property of Kent USA
Do Not Reproduce

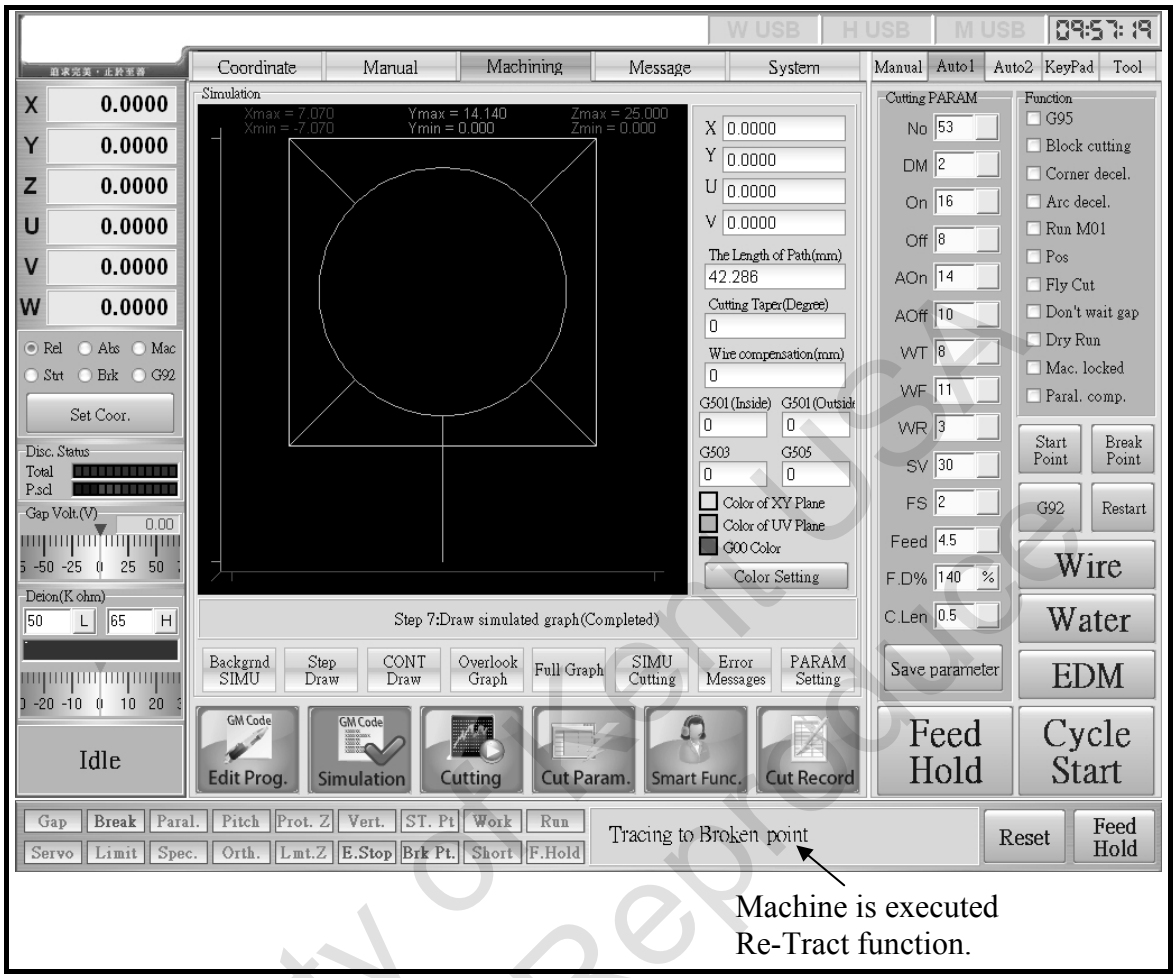

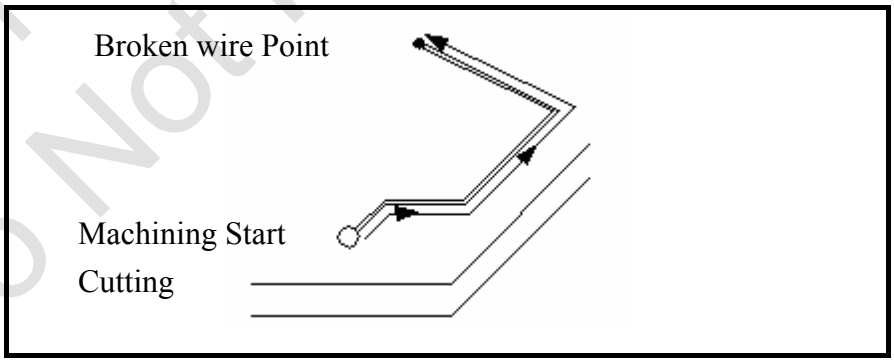

《H.PT RETN》

! Note

If the cutting wire has to retract follow by the path with sharp corner, the cutting wire might be broken on that area.

Property of Kent USA
Do Not Reproduce

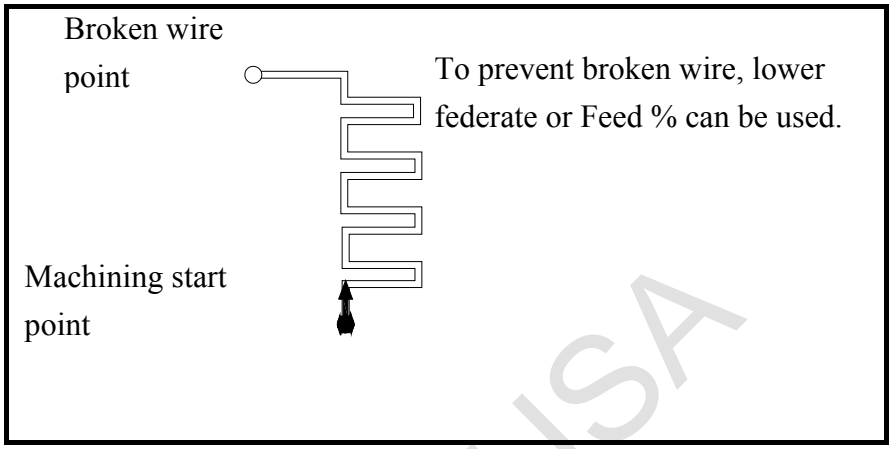

! Note

Once the cutting wire is back to broken wire follow by the current path, press《RESTART》after《WIRE》《WATER》《EDM POWER》to continue machining.

Property of Kent USA
Do Not Reproduce

6 Short Circuit

If the short circuit is appeared while machining, the cutting wire will retract alone the working path till the short circuit problem is solved.

This function has to be executed under【Auto1】mode.

The procedures are shown as below

（1）Set《POS》to ON.

（2）Press《WIRE》《WATER》《EDM》.

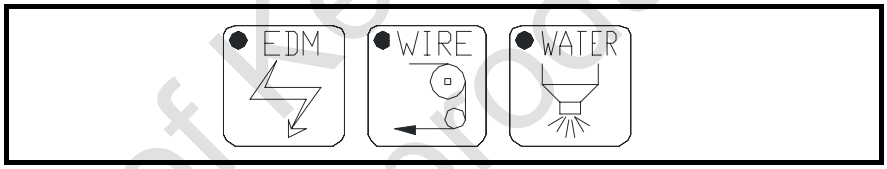

（3）Press《START》.

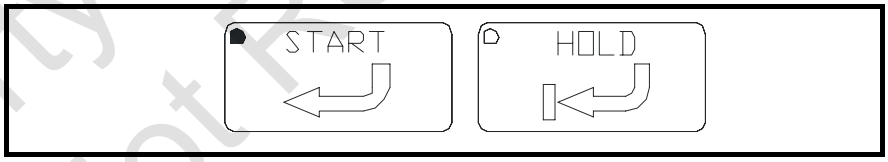

（4）if the cutting wire touch the workpiece while EDMing, the light of short circuit will be on and the cutting wire will stop moving.

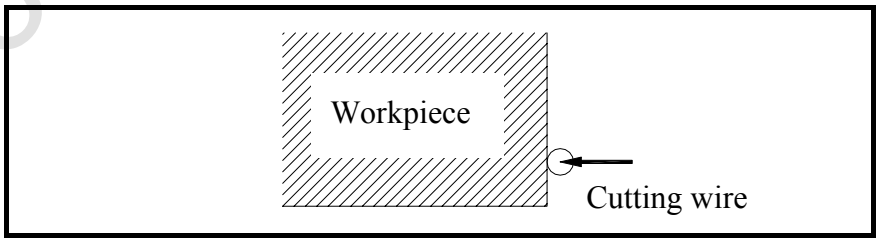

✐ Hint

This function can be worked with《DRY RUN》in order to increase moving speed and prevent wire broken due to the fast

Property of Kent USA
Do Not Reproduce

7 Taper Cutting

Flow Chart for Taper Cutting

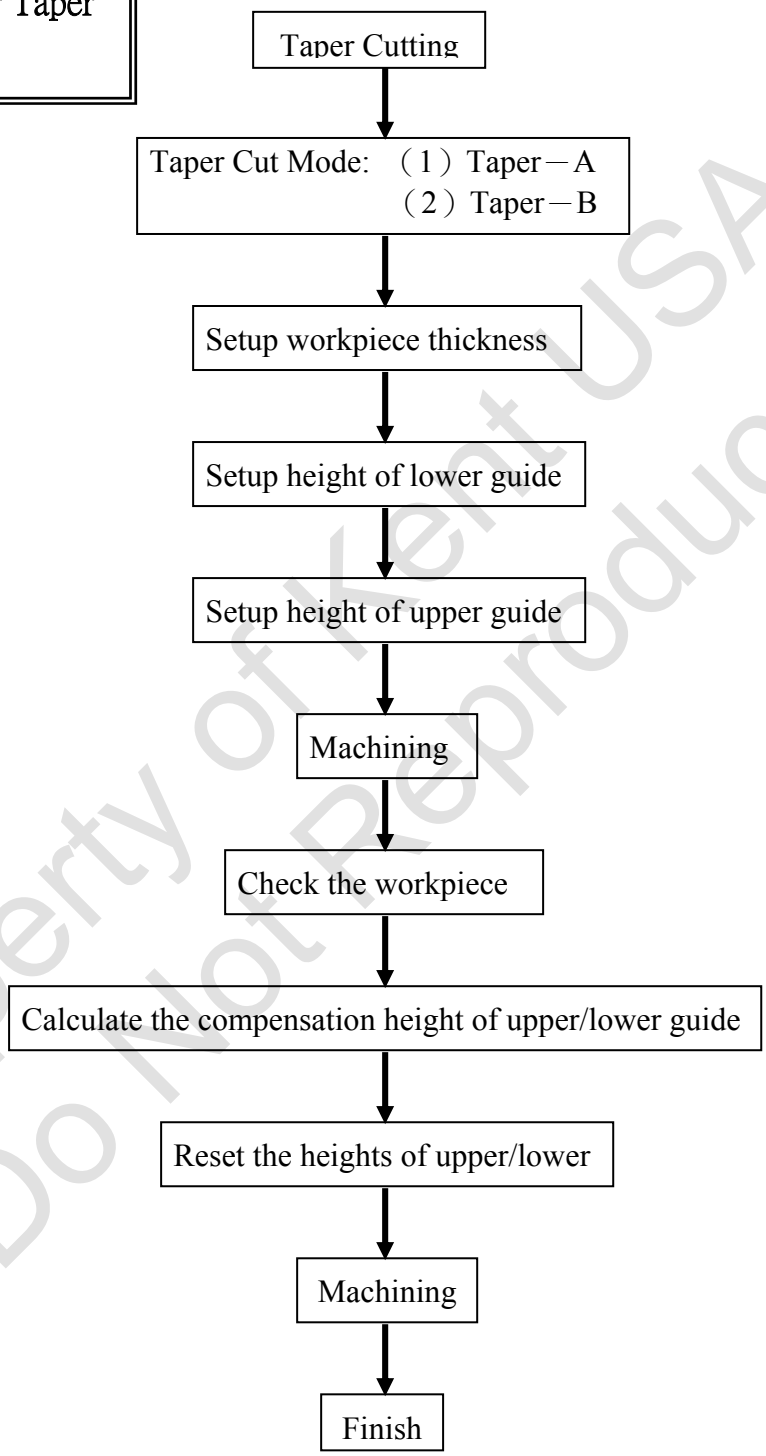

Property of Kent USA
Do Not Reproduce

For Taper cut, tilt the cutting wire by moving U axis and V axis and make the upper and lower guide are not on the vertical line.

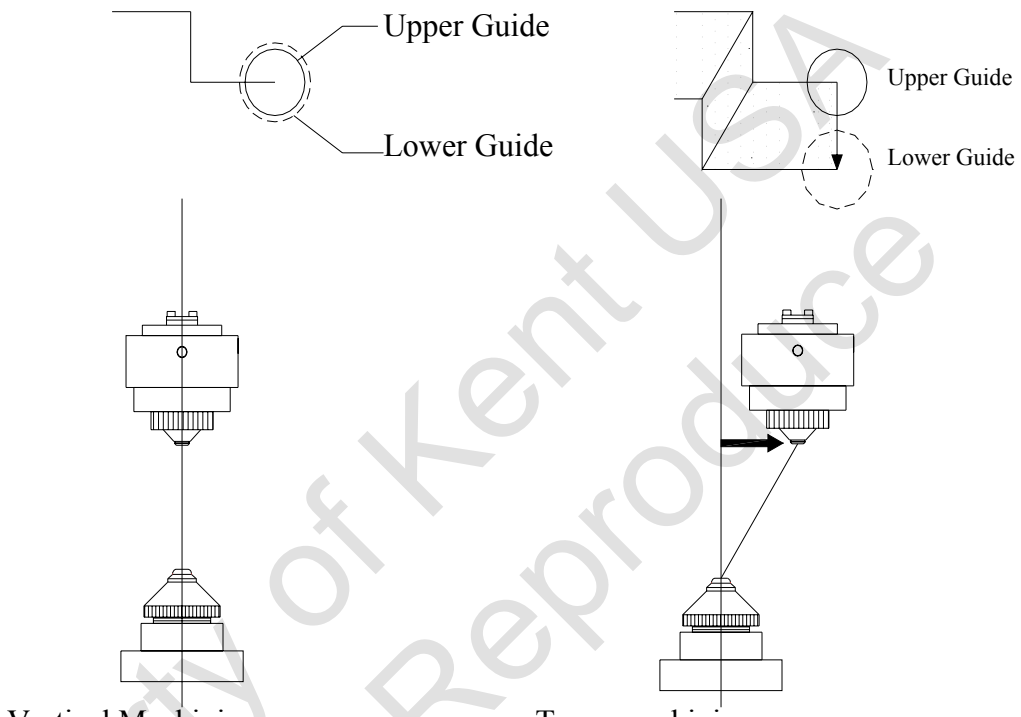

Vertical Machining
Won't move alone U and V axis.
(Machine head is fixed. Work

Taper machining
Upper machine is moving alone U and V axis.

There are 2 types of assigned taper cut：
One is assigned angle for taper cut.
The other is assigned upper and lower graphic fro taper cut.
Please refer to **Section 4.9** for more details.

Property of Kent USA
Do Not Reproduce

7.1 Taper Cut Setting

The distance between upper and lower guide and the thickness of workpiece has to set before taper cut.

7.1.1 Setup the height for lower flush guide

（1）Preparation:

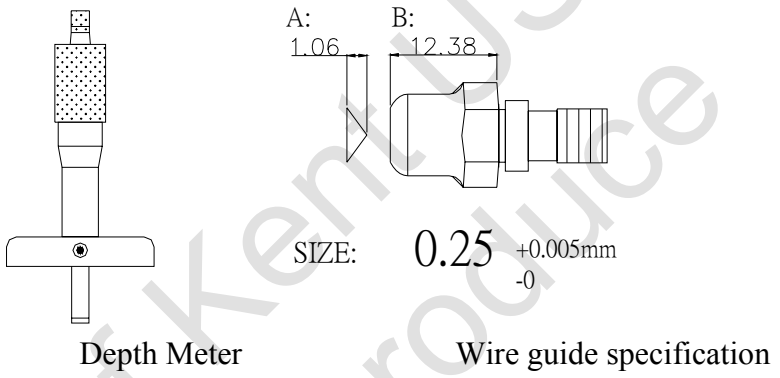

Wire Guide specification table enclosed in machine tool box. (red box).
The specification should come with the new wire guide when you cotton cloth to wipe the surface.

（2）Clean the work table.
Grind the work table with millstone. Use clean soft cotton cloth to wipe the surface.

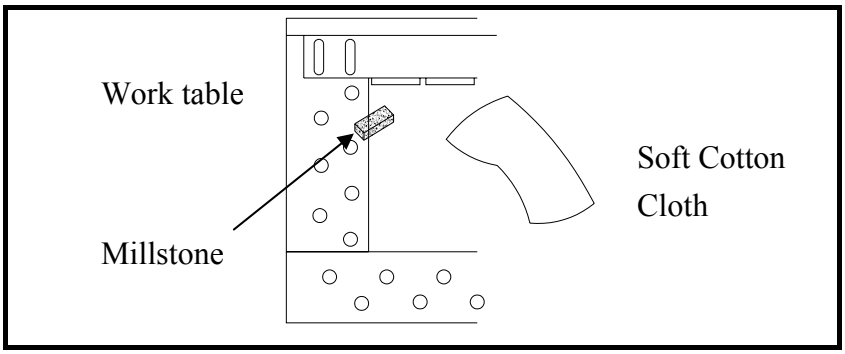

Property of Kent USA
Do Not Reproduce

（3）Remove the lower flush cap.

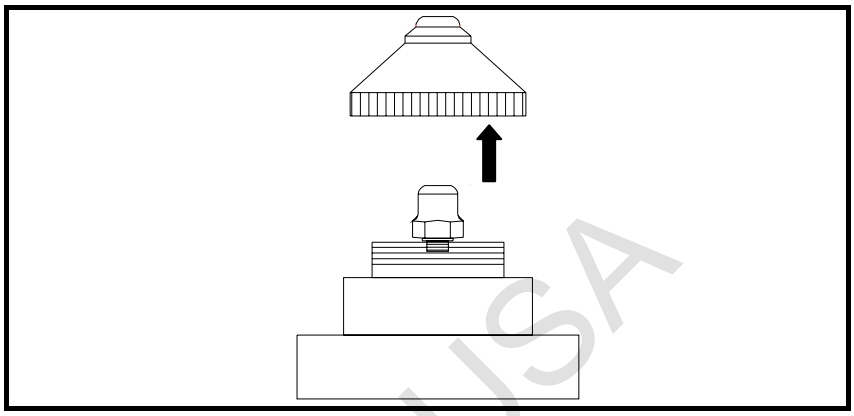

（4）Move the machine head to the corner machine table.

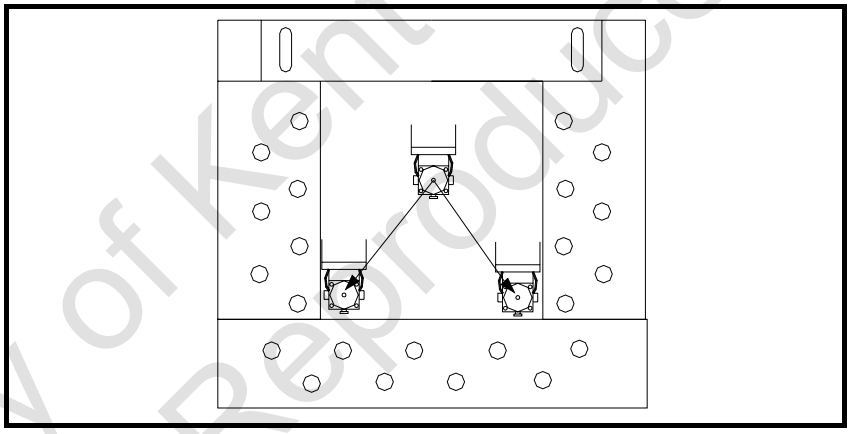

（5）Use depth meter to check the distance between work table and lower wire guide.

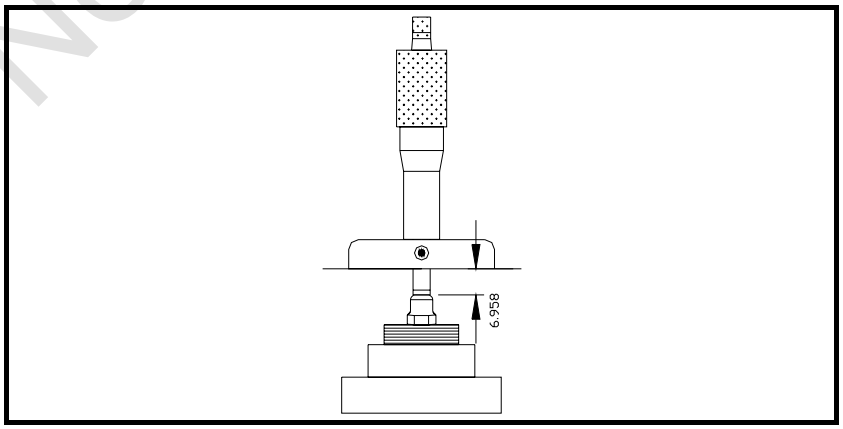

In this example, the distance is 9.483

Property of Kent USA
Do Not Reproduce

（6）Add the distance to the “A=” in wire guide specification table and save this value to the lower wire guide value in parameter setting screen
Depth（9.483）＋“A=”（1.06）=10.543

! Note

＊Usually the lower guide space in “parameter Setting” is measured and saved by perpendicularity rectifier. After the alignment by rectifier, the lower guide value needn’t be changed.
＊The lower guide space cannot be change under “Parameter Setting” I only can be changed under Diagnosis Screen.

The procedures to change the setting of “Simulation”.
① Click《Simulation》under【Machining】

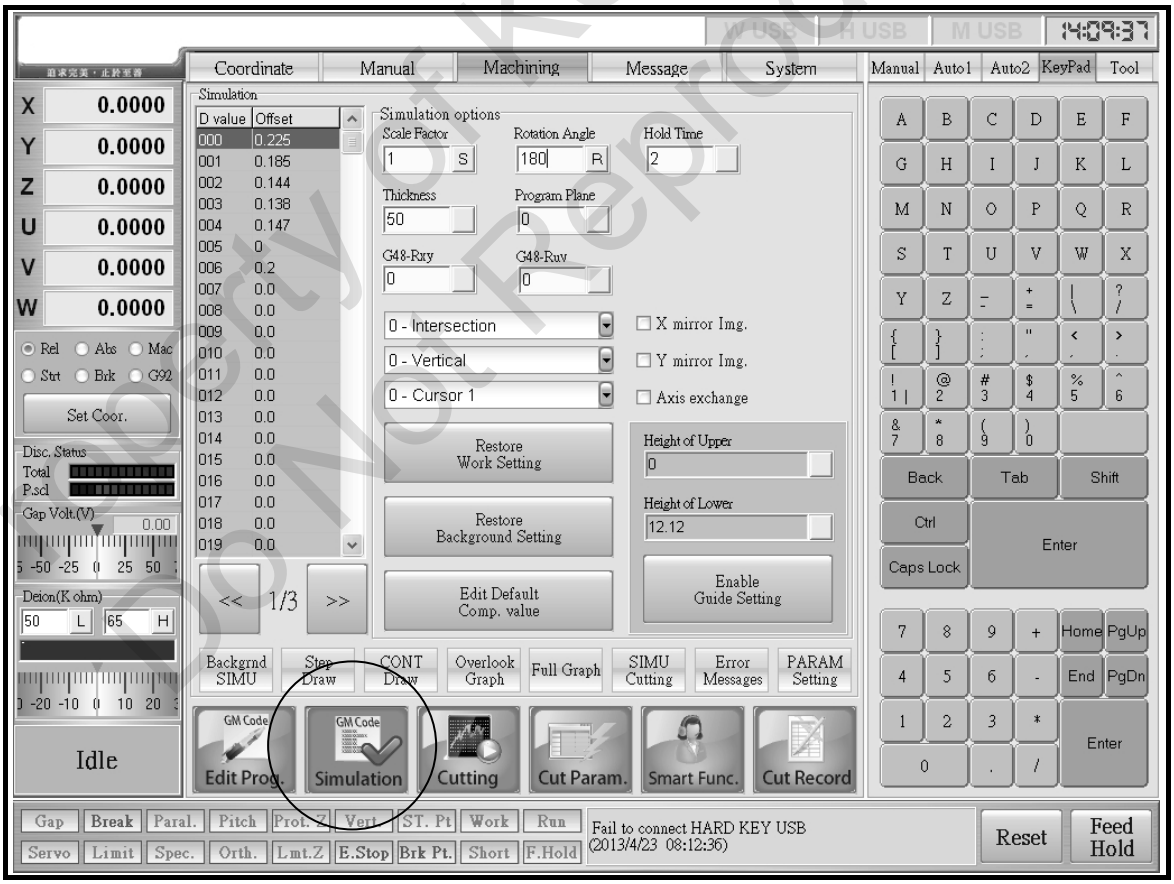

Property of Kent USA
Do Not Reproduce

②Enter the《Program simulation》screen.

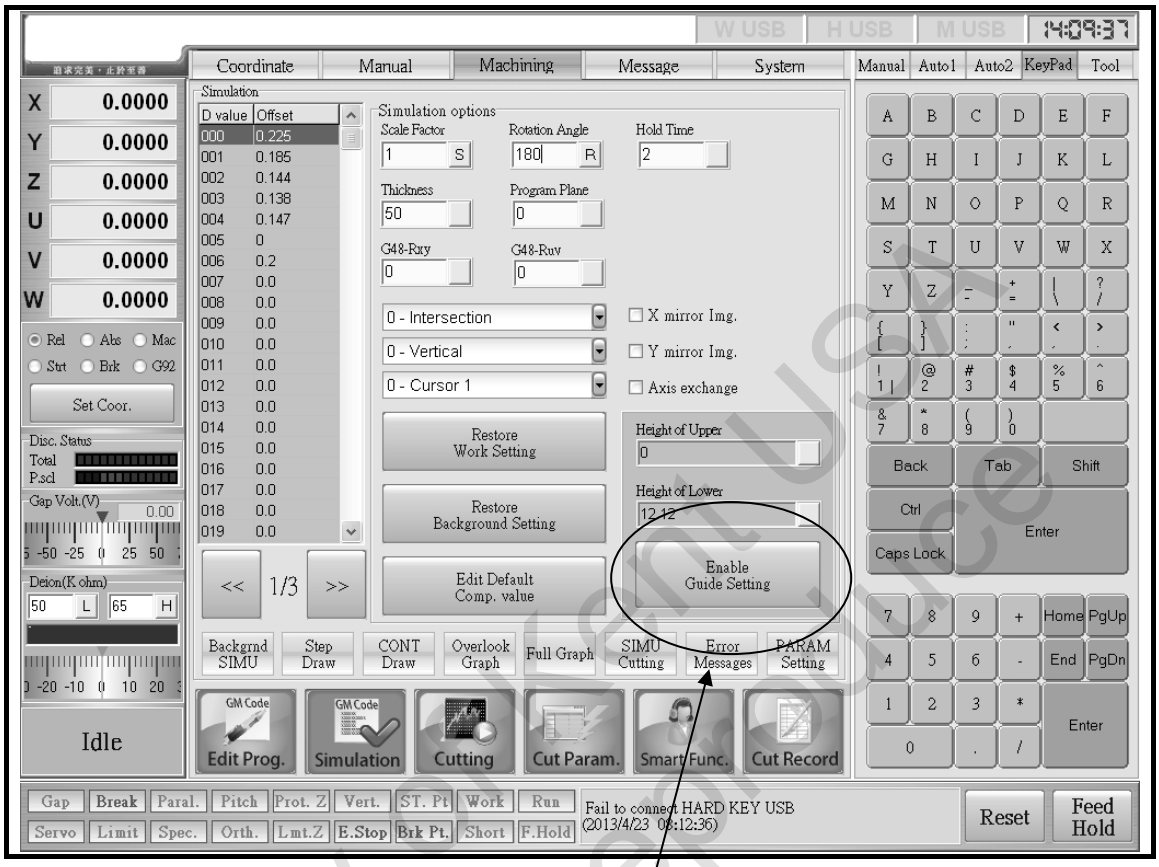

Password:"JsGuid"

✎ Hint

Restart the system is not necessary after changing the "Parameter Setting".

Property of Kent USA
Do Not Reproduce

7.1.2 Setup the height for upper flush guide

（1）Preparation

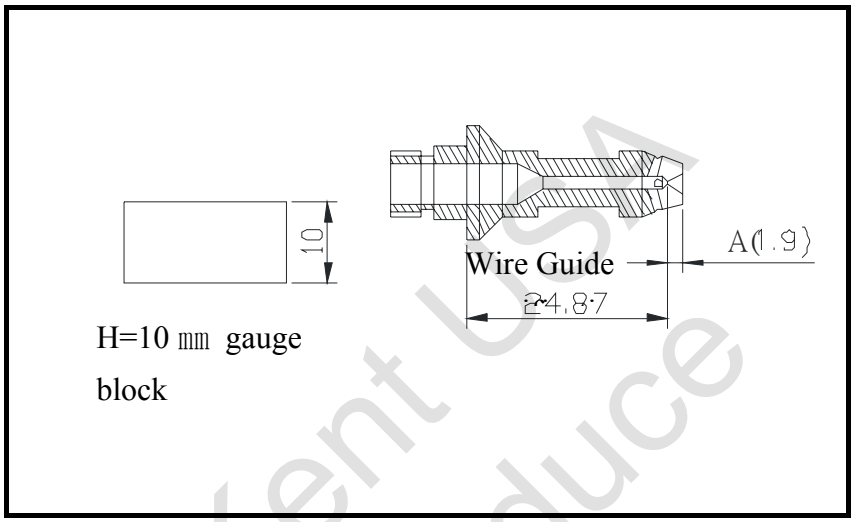

Wire Guide specification table enclosed in machine tool box. (red box)
The specification should come with the new wire guide when you purchase from the supplier.

（2）Clean the work table.

Grind the work table millstone. Use clean Soft cotton cloth to wipe the surface.

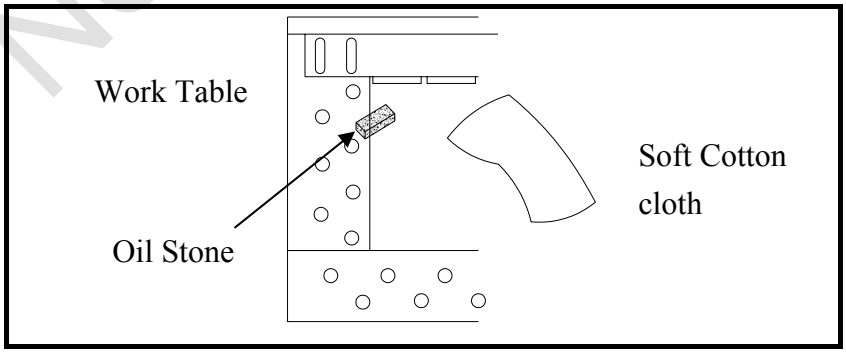

（3）Remove upper flush cap

Remove the upper flush cap and other parts except wire guide.

Property of Kent USA
Do Not Reproduce

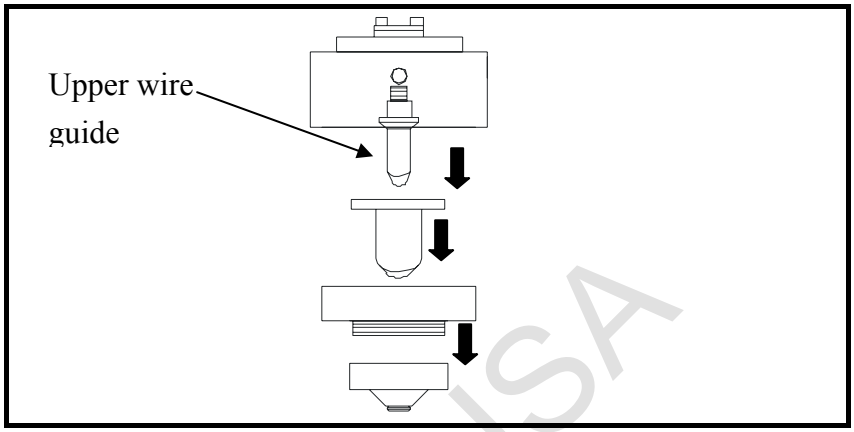

（4）Move the upper machine head above the work table and put the gauge block on worktable.

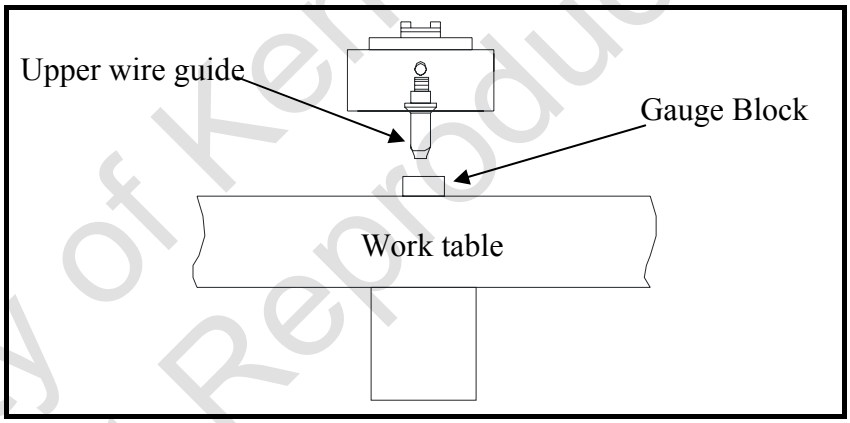

（5）Move the upper wire guide close to gauge block. While the wire guide is as close as 1 mm to the gauge block, press《×1》and reduce the moving speed to minimum. Keep moving the wire guide till it touches the gauge block. The gauge block should not be moved now. Press《INC_JOG》key and press《Z+》key 1 or 2 times to loosen the gauge block.

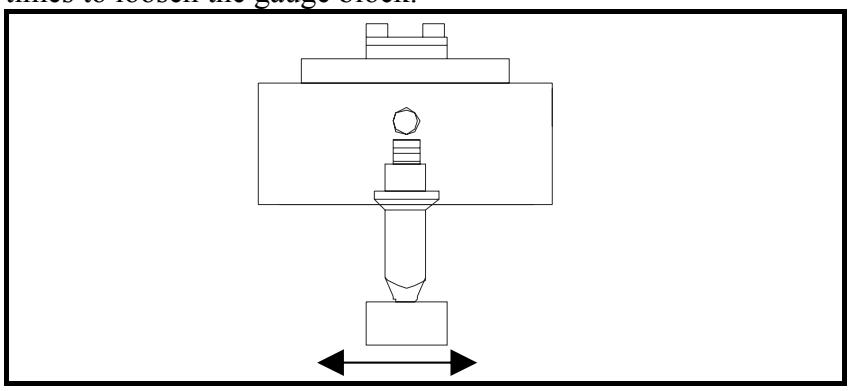

Property of Kent USA
Do Not Reproduce

（6）Add the height of gauge block to the “A=” in wire guide specification table. And save it to the “Parameter Setting”.

Gauge Block（10.00）＋A（1.9）＝11.900（Actual value of upper wire guide）

Input 11.900 to “Parameter Setting” screen in upper guide column.

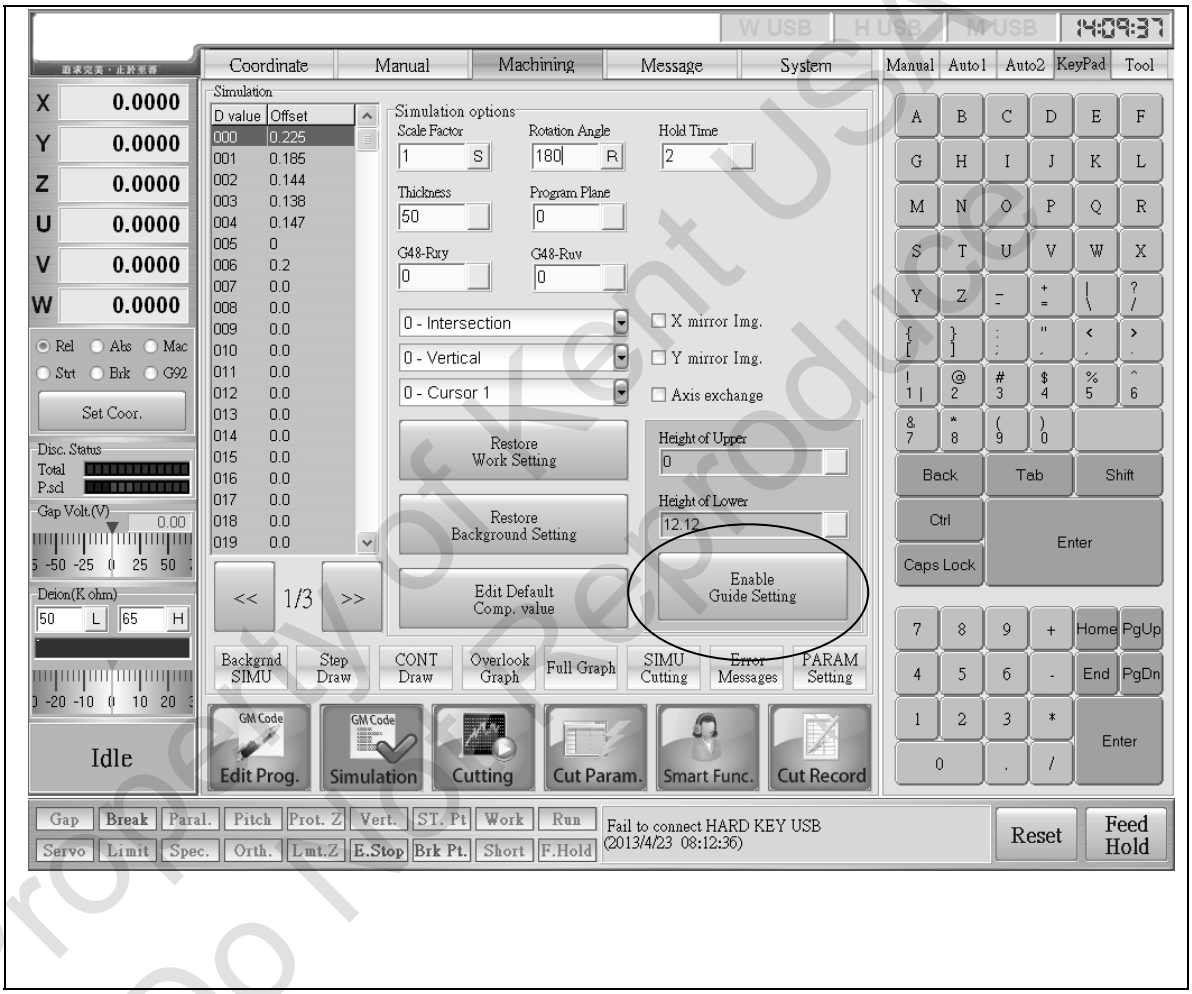

✐ Hint

Restart the system is not necessary after changing the “Parameter Setting”.

! Note

＊ Prevent using fast speed while moving the upper guide towards the gauge block. Otherwise it will damage the upper machine head.

Property of Kent USA
Do Not Reproduce

7.1.3 Setup Taper Cut Mode

There are 3 taper cutting modes fro selection:

Mode 0：Vertical Cut. No taper cut in this mode. G51 and G52 is skipped in program.

Mode 1：Taper A. Cut the taper base on the taper angle input.

Mode 2：Taper B. Assign the upper and lower graphic in program and cut the workpiece.

7.1.4 Program plan and workpiece thickness setting

Position of program plan:

Set up the graphic position produced by taper cut.

Program plan is the same as the graphic produced by the Vertical Cut.

Thickness of workpiece：

Set up the position on the opposite of Program Plan.

When the opposite side of surface is higher than the Program Plan, do not add symbol in front of the thickness of workpiece. Otherwise, add the symbol（－）in front of the thickness of workpiece thickness.

＊ Following is the explanation of program plan and workpiece thickness.

（1）When the program plan is on the bottom of workpiece（Same as work table），

Program Plan Position＝0.000（Work Table）

Workpiece Thickness＝20.000

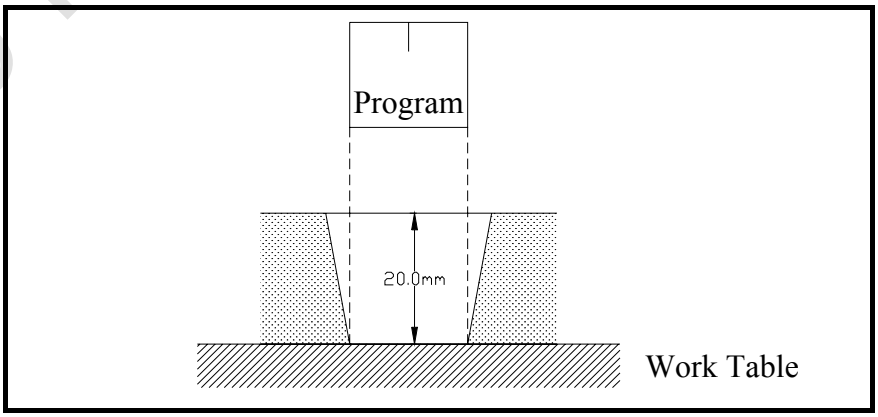

（2）When the program plan is on the top of the workpiece,

Program Plan Position＝20.000（Top of workpiece）

Workpiece thickness＝－20.000

Property of Kent USA
Do Not Reproduce

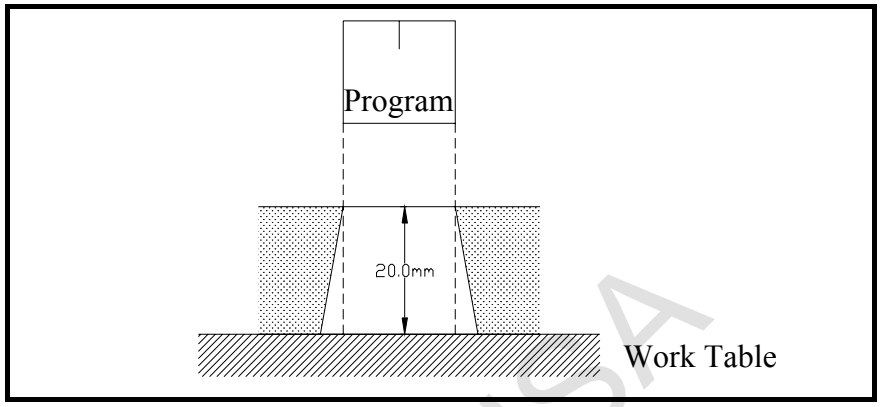

（3）Vertical Cut Top machining
Program Plan Position＝15.00
Workpiece Thickness＝－15.000

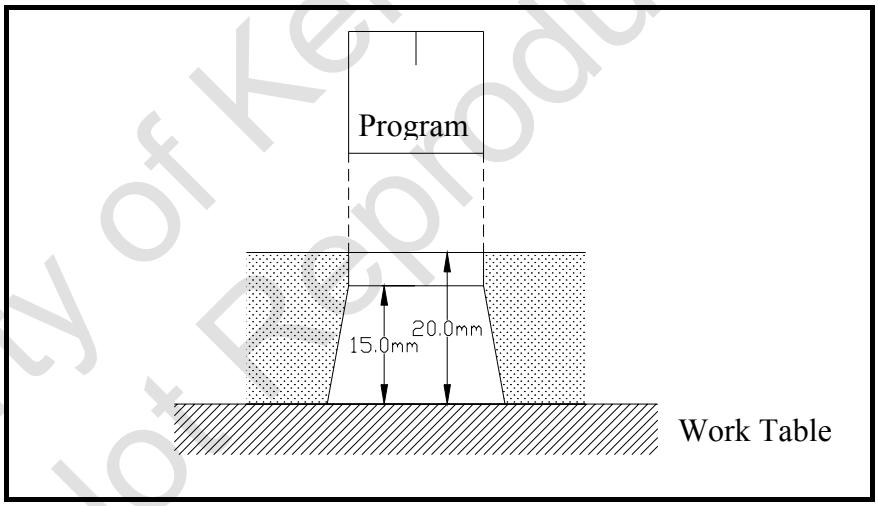

7.2 Taper Angle Compensation

In order to get the best setting, test cut is necessary for high precision taper cut.

The ideal method is to do the test cut on the actual cutting area. If there is no extra section in the workpiece for test cut, use the same material and thickness instead.

Property of Kent USA
Do Not Reproduce

7.2.1 Example of test cut

Thickness of workpiece: 20 ㎜

Cutting taper: 10°

（1）Graphic generated by taper cut.

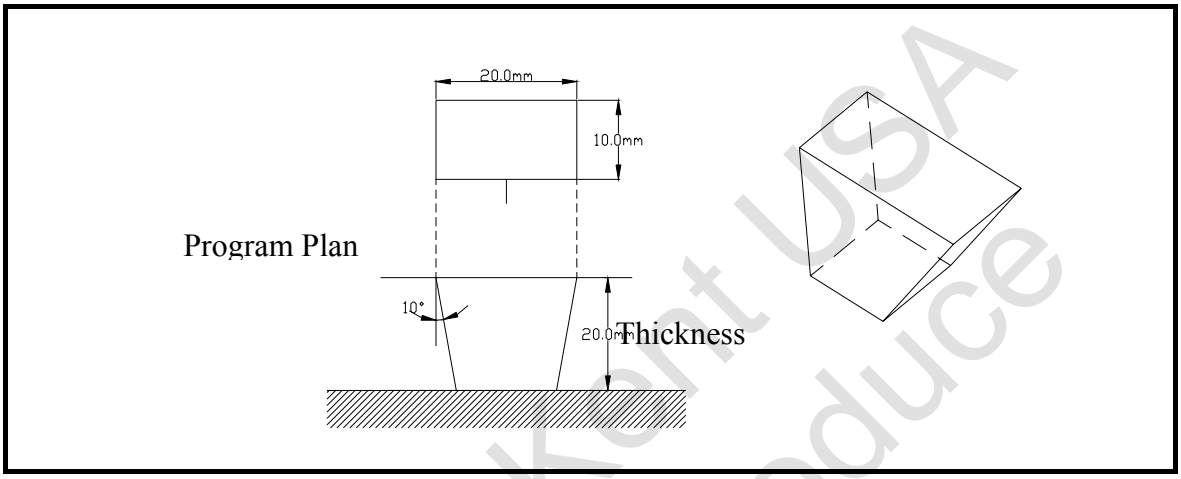

（2）Generate graphic program

```
G92 X0. Y0.
G91 G94 F1.5
G01 Y5.
G52 X10. T10.
Y10.
G50 X-10.
G52 X-10. T10.
Y-10.
G50 X10.
Y-5.
M02
```

Property of Kent USA
Do Not Reproduce

（3）Setup taper cut in “Parameter Setting” screen

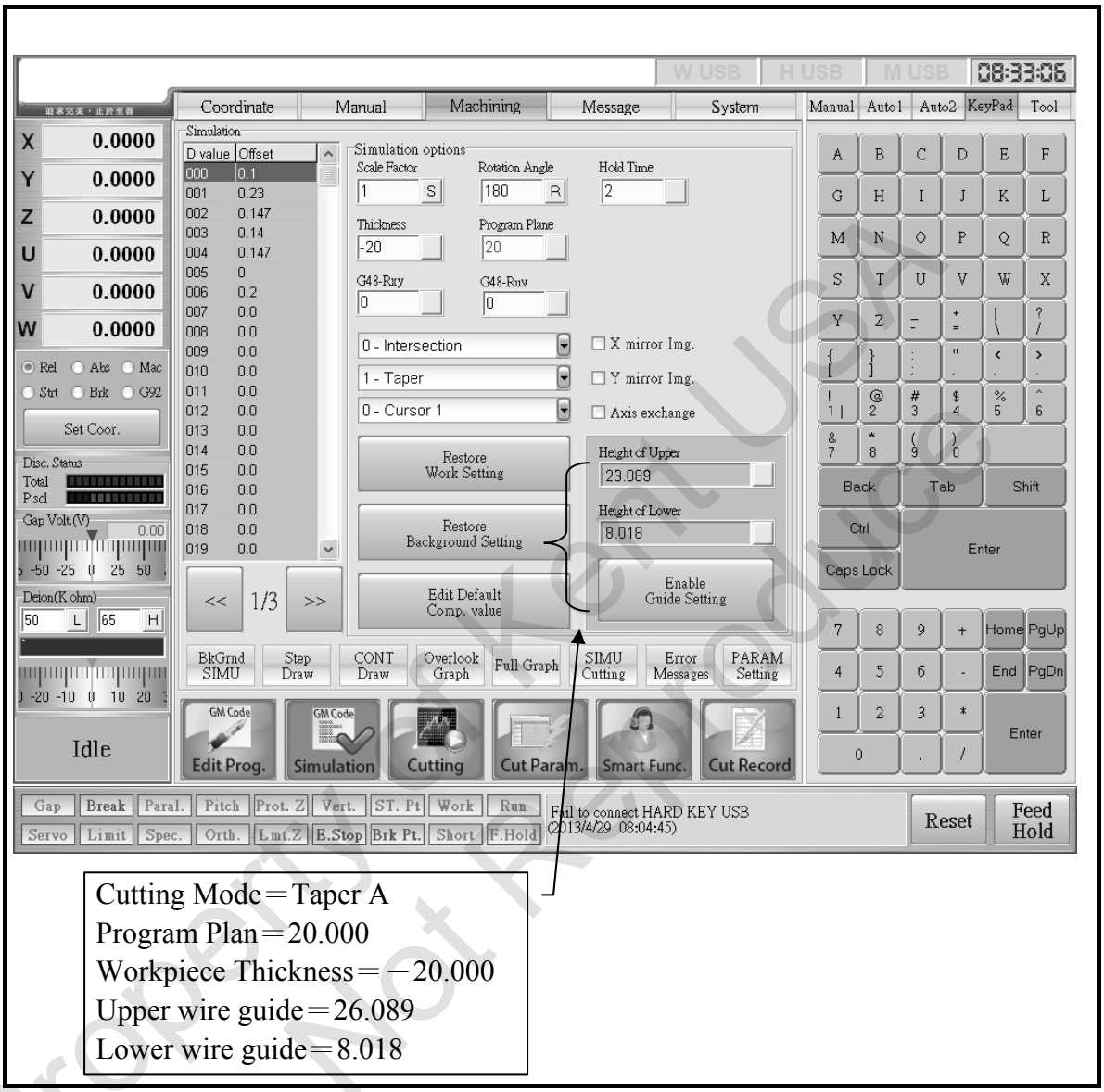

Cutting Mode＝Taper A
Program Plan＝20.000
Workpiece Thickness＝－20.000
Upper wire guide＝26.089
Lower wire guide＝8.018

Property of Kent USA
Do Not Reproduce

7.2.2 Test the result- dimension of workpiece

（1）Test the program setup plan, A and B dimension.

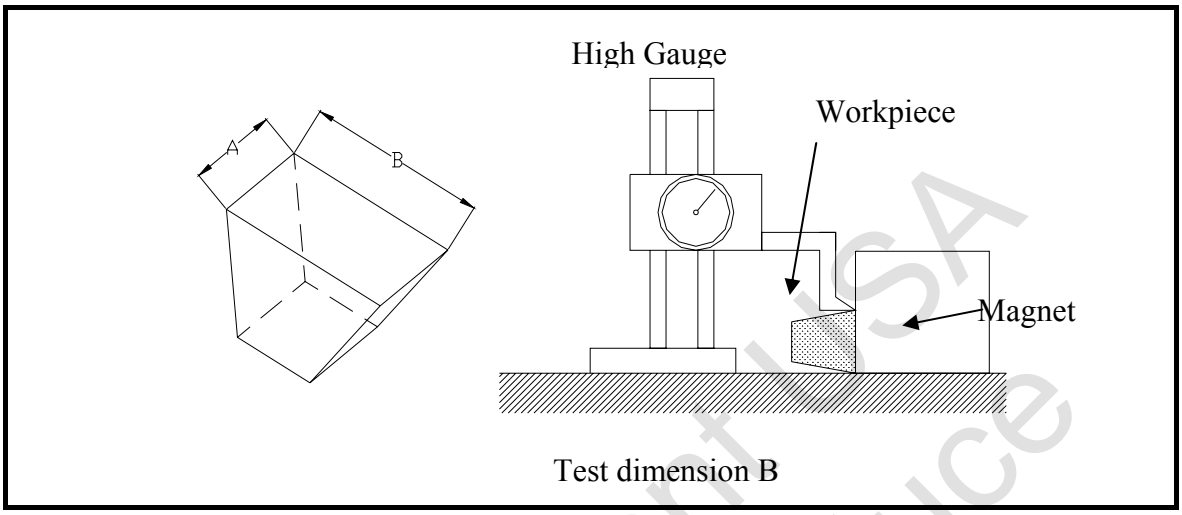

（2）Measure the Taper Angle

Use angle block or Sine Plate to measure the angle. Use the test indicator to measure the surface of workpiece.

Example: Because each side of taper angle is 10 degree, the tilting angle on the angle block is 20 degree.

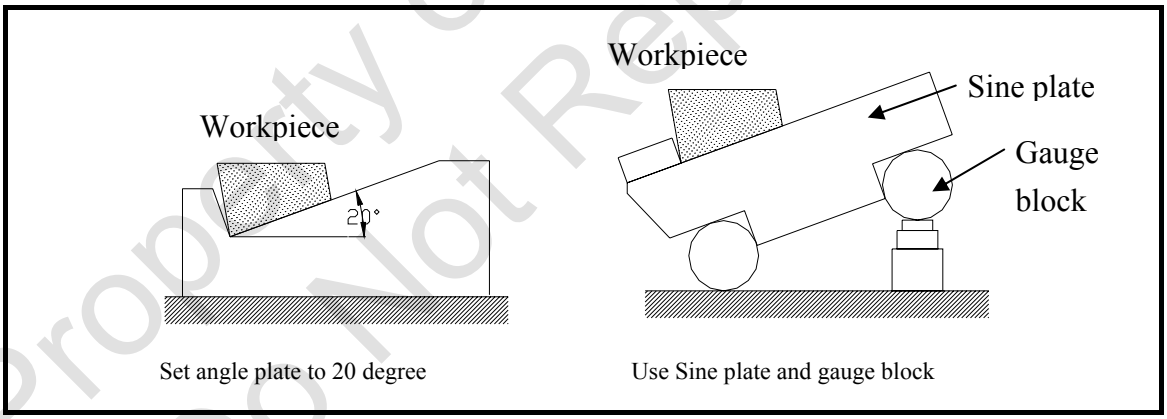

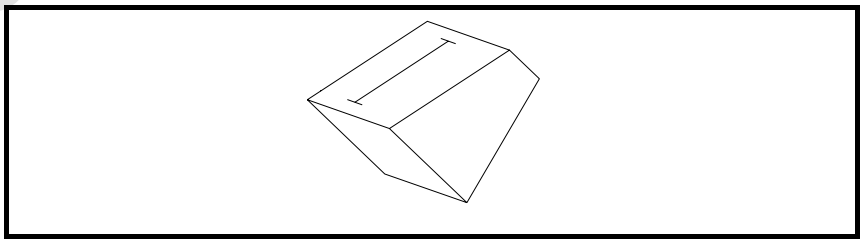

Because the distance of Center- to- Center is 100mm, please use 34.20mm gauge block to make 20 degree tilting surface.

（100×sin20° ＝34.20）。

Use a pencil to make the mark on the measure area. The length of mark is base on the taper and the thickness of workpiee.

Property of Kent USA
Do Not Reproduce

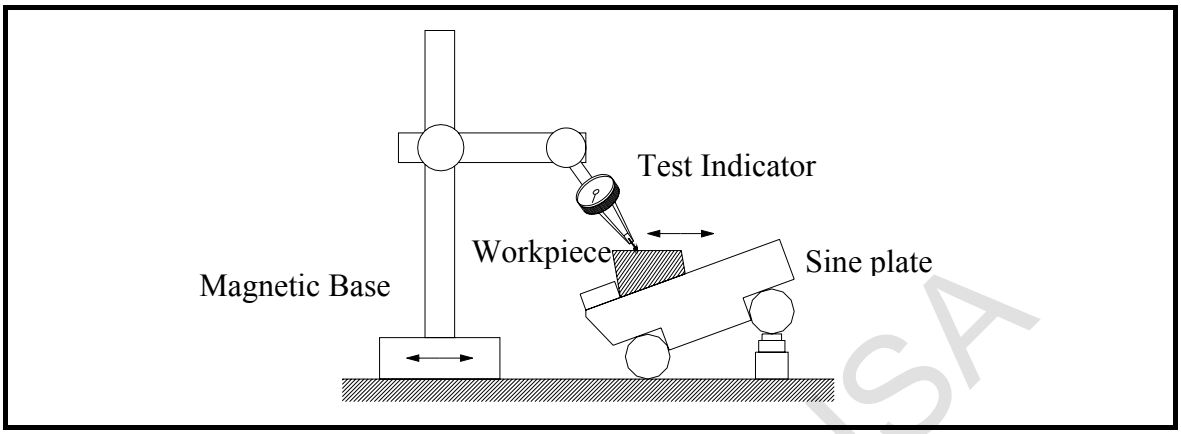

As shown above, move the test indicator with magnetic base back and forth. Read the number from test indicator. If the needle is not moving, it means finish taper size is accurate.

If the needle is shaking, check the needle moving direction while moving the test indicator on order to check the taper angle is larger or small than the desired angle.

If the indicator moved to the left and needle is rotated on counter clockwise direction, or while the indicator moved to the right and the needle is moved on clockwise direction, it means the taper angle is smaller than the desired setting.

On the other hand, the taper angle is larger than the desired setting.

Example

When the taper angle is less than the assigned value, indicator moves 20mm and the needle moves 0.155mm

Angle Shiftδθ

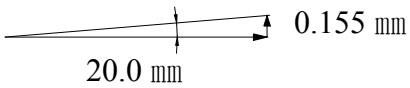

$$\delta\theta = \mathrm{Tan}^{-1}\frac{0.155}{20} = 0.44405^{\circ}$$

T

Total Taper angle is 20

Each angle shift is:

0.44403÷2＝0.22202

Actual Taper angle is:

10－0.22202＝9.77797°

Property of Kent USA
Do Not Reproduce

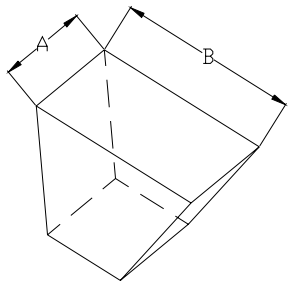

Test Result:
Taper Angle：9.77797°
Dimension A：9.762 ㎜
Dimension B：19.801 ㎜

7.2.3 Calculation the compensation via test result

The error of taper angle can be corrected by the compensation of the distance on upper and lower guide.

The compensation value γ of upper and lower guide is：

$$\gamma = \frac{F}{2}\left(1 - \frac{\tan\theta}{\tan\theta'}\right)$$

F：The distance between upper and lower guide.

"Parameter Setting" The sum of these 2 numbers is:

①Upper guide

②Lower guide

F＝①＋②＝26.089＋2.018＝34.107

θ：Taper angle assigned in program

θ': Actual taper angle

In this example, the compensation value is：

F=34.107，θ＝10，θ'＝9.7797

$$\gamma = \frac{34.107}{2}\left(1 - \frac{\tan 10}{\tan 9.77798}\right) \fallingdotseq -0.3951$$

Value of Upper guide（Undated value）：

（value of upper guide）－（γ）＝26.089－（－0.3951）＝26.4841

Value of Lower guide（Undated value）：

（value of lower guide）－（γ）＝8.018－（－0.3951）＝8.4131

Property of Kent USA
Do Not Reproduce

Re- test cut with the new setting. For the new test result, the taper angle should be more accurate.

The compensation values on A and B dimension might be different

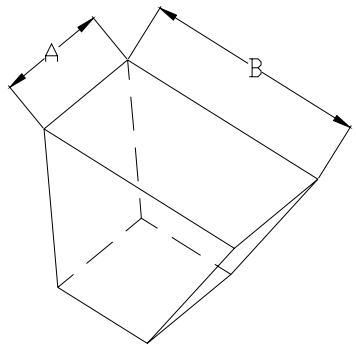

Dimension：A＝9.742
（Compensation Value＝0.129）
B＝19.815
（Compensation Value＝0.0925）

If the compensation values are different, the values for vertical parts and taper parts should be set separately. It will make the program more complicated.

The situation is happened if the related position of upper and lower guide is correct but is shifted up or down.

Dimension A Compensation（10－9.742）÷2＝0.129

Dimension B Compensation（20－19.815）÷2＝0.0925

The difference between compensation values is due to the vertical position error on upper and lower wire guide.

Assume the dimension A compensation value is a and dimension B compensation value is b.

When a－b＞0, position is shifted down.

When a－b＜0, position is shifted up.

When a－b＝0, position is correct.

If the large taper angle is used, the error is occurred (Compensation Value）/cos

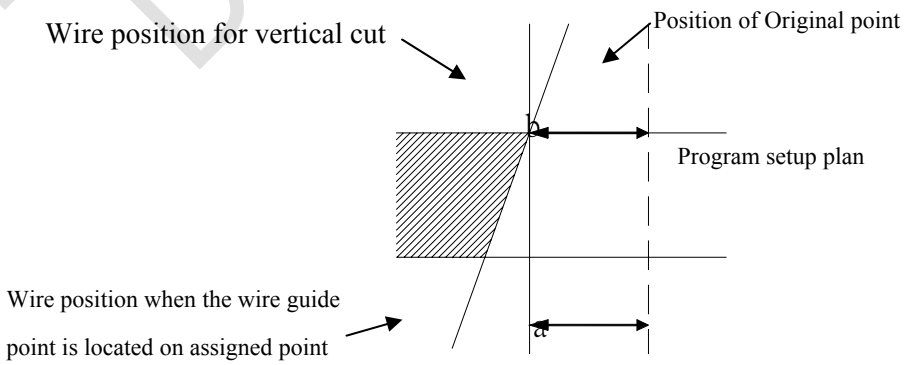

＊When wire guide point is located on assigned position a－b＝0

Property of Kent USA
Do Not Reproduce

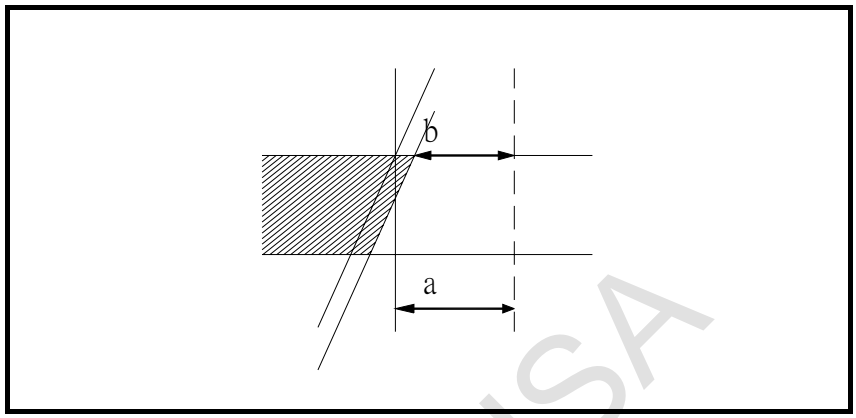

If a－b＞0, it means the wire guide position is lower than the assigned position.

→ The moving distance on upper guide is larger than the assigned distance.

↓

Have the assigned point closed to the actual point. Re- assign the position of upper and lower guide lower than the setting in ”Parameter Setting” → The movement of upper wire guide decresed.

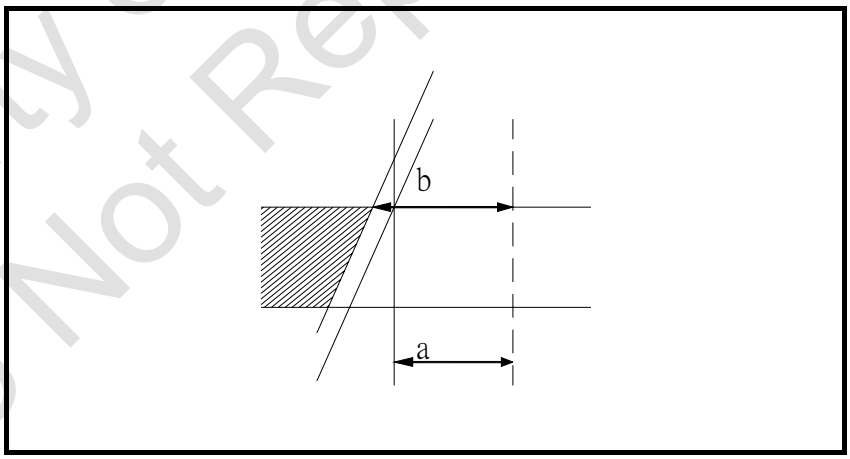

If a－b＜0, the wire guide position is higher than the assigned position.

→ The moving distance of upper guide is smaller than the assigned distance.

↓

Have the assigned point closed to the actual point. Re- assign the position of upper and lower guide higher than the setting in “Parameter Setting”

→ The movement of the upper wire guide increased.

Property of Kent USA
Do Not Reproduce

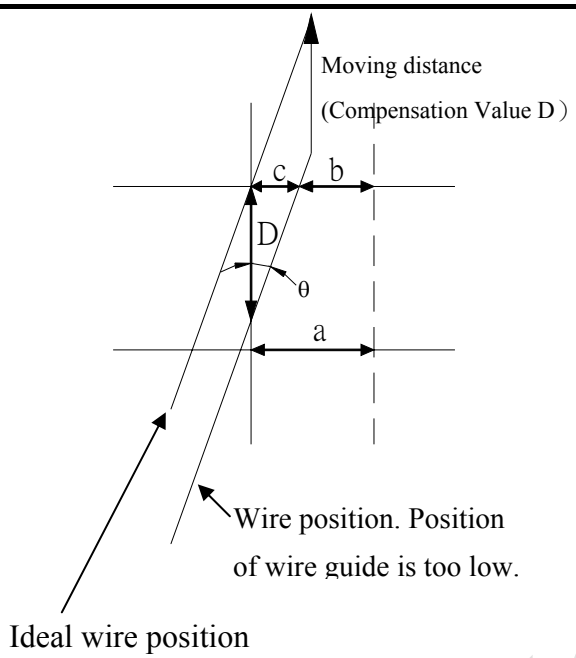

Equation of Compensation D：

$$D = \frac{c}{\tan\theta}$$

$$c = |a - b|$$

Example in this case：

$c = |0.129 - 0.0925| = 0.0365$

$D = 0.0365/\tan 10^\circ \fallingdotseq \underline{0.2070}$

The compensation value D calculated above is the new value for upper and lower wire guide.

＊If the position of wire guide is lower than the assigned position（a－b＞0）, re- assign the new position lower than the assigned position.

Value of upper wire guide（new）：
（Original value of upper wire guide）－D＝26.4841－0.2070＝26.2771

Value of lower wire guide（new）：
（Original value of lower wire guide）＋D＝8.4131＋0.2070＝8.6201

＊If the position of wire guide is higher than the assigned position.（a－b＜0）, re-assign the position higher than the assigned position.

Value of upper wire guide（new）：
（Original value of upper wire guide）＋D＝26.4841＋0.2070＝26.6911

Value of lower wire guide（new）：
（Original value of lower wire guide）－D＝8.4131－0.2070＝8.2061

Property of Kent USA
Do Not Reproduce

7.3 Things to be careful while taper cut

7.3.1 EDM DATA setup

Taper cut is different from Vertical cut. Even through the thickness of workpiece is the same, the EDM Data is different.

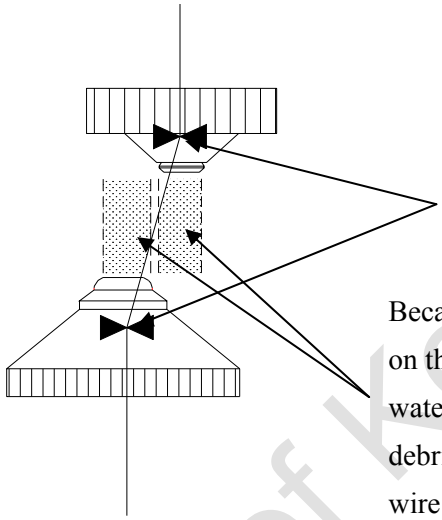

When the wire taper is increased, the cutting wire will break more easily. The larger flush cup will reduce the water pressure too.

The EDM DATA for taper cut is shown as below(compare with Vertical Cut）：

ON TIME：－2～－3
OFF TIME：＋3～＋4
ARC ON TIME：－2～－3
ARC OFF TIME：＋3～＋4
Servo Voltage：＋5～＋7
Wire Tension：－1～－3
Wire Feed Rate： No change
Water Pressure：No change

＊The EDM DATA shown above is base on the rough cut for taper machining.

＊The EDM DATA for taper skim cut is the same as vertical skim cut

Property of Kent USA
Do Not Reproduce

7.3.2 Upper and lower flush head selection

For large taper angle, the wire touches the edge of flush head(15°

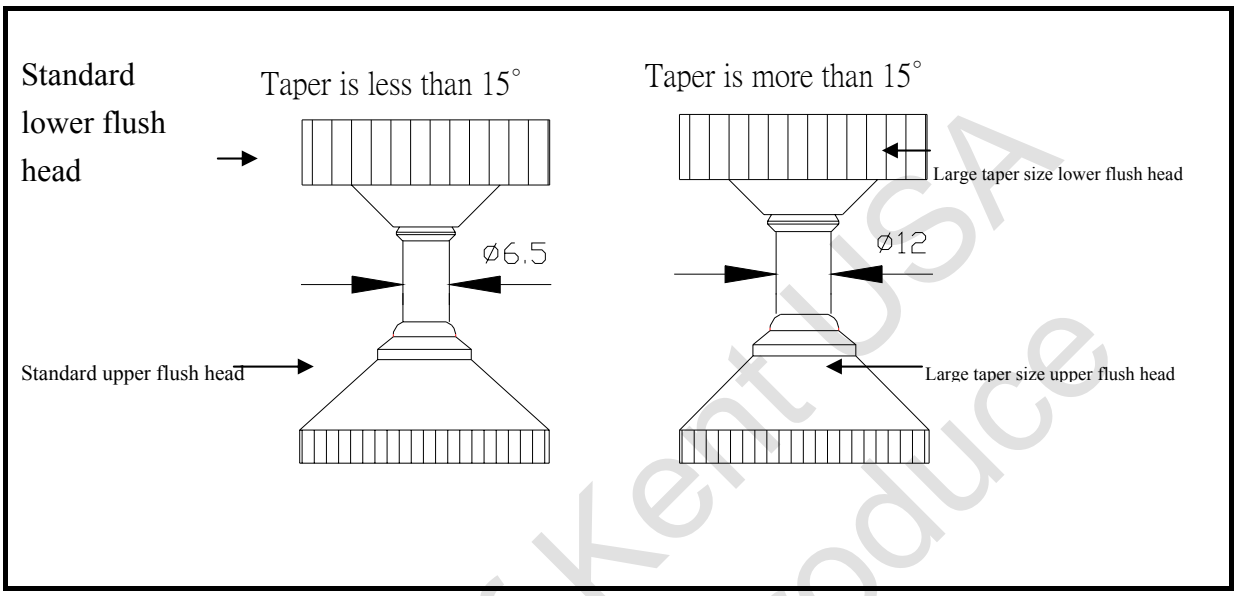

Even though the tapper angle (15°) is assigned in program, the angle will be more than 15° in corner cut area. Hence, check the actual taper angle in Dry Run.

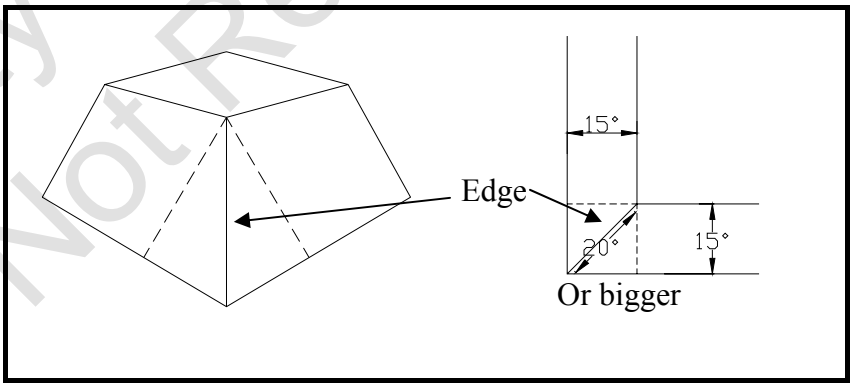

Even the assigned taper angle is15°, the actual angle in 90°corner will exceed 20°. Large taper flush head is recommended in this application.

! Note

When using 4 ㎜ flushing head, there will be a limit during the cutting taper process.

Standard Model：11°

Property of Kent USA
Do Not Reproduce

7.3.3 Maximum Taper Angle

The thicker workpiece has, the less Taper angle workable. Following table is maximum taper angle base on the gap= 0.2mm between flush head and workpiece. If the gap is increased, the workable taper angle is decrease.

Following is the relationship between thickness of workpiece and workable taper angle:

Thickness of workpiece	Taper angle	Thickness of workpiece	Taper angle
80 ㎜ or lower	±30°	200 ㎜	±14°
100 ㎜	±25°	250 ㎜	±12°
120 ㎜	±20°	300 ㎜	±10°
150 ㎜	±18°		

Property of Kent USA
Do Not Reproduce

7.3.4 Things to be careful to restore broken wire while taper cut

It's difficult to thread the wire during taper cut. It's necessary to thread the wire in start point.

DO NOT press《VERT》while machine is back to start point.

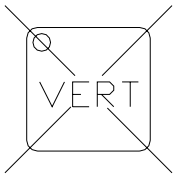

Never press《VERT》key when machine is try to thread the wire in taper cut

Use "Retract back to start point alone the working path" method to move the upper and lower machine head back to starting point. Feed the wire then press《WIRE》to wind the cutting wire.《WIRE》,《WATER》,《EDM》and then press《RESTART》. When NC program is executed to broken wire point, the light on《RESTART》key will be off. Press《START》to start machining.

When wire is broken during taper cut, press《ORG.S.PT》under【Auto】mode and move the upper and lower machine head back to start point.

Feed the cutting wire then press《WIRE》key to wind the wire. Then press《ORG.H.PT》.

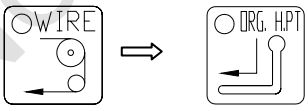

Press《WIRE》《WATER》《EDM》when cutting wire retract back to broken wire

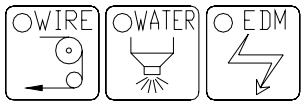

Press《RESTART》to restart

Property of Kent USA
Do Not Reproduce

8 Skim Cut

8.1 Principle of Skim Cut

When the cutting speed is increased, the cutting accuracy and surface finish is reduced. For a better cutting accuracy and surface finish, cutting speed should be lowered.

For the first cut, workpiece cannot reach the accuracy of 10μm or 1μm Ra surface finish.

After the rough cut, couple times of skim cut is necessary in order to get a better finish result.

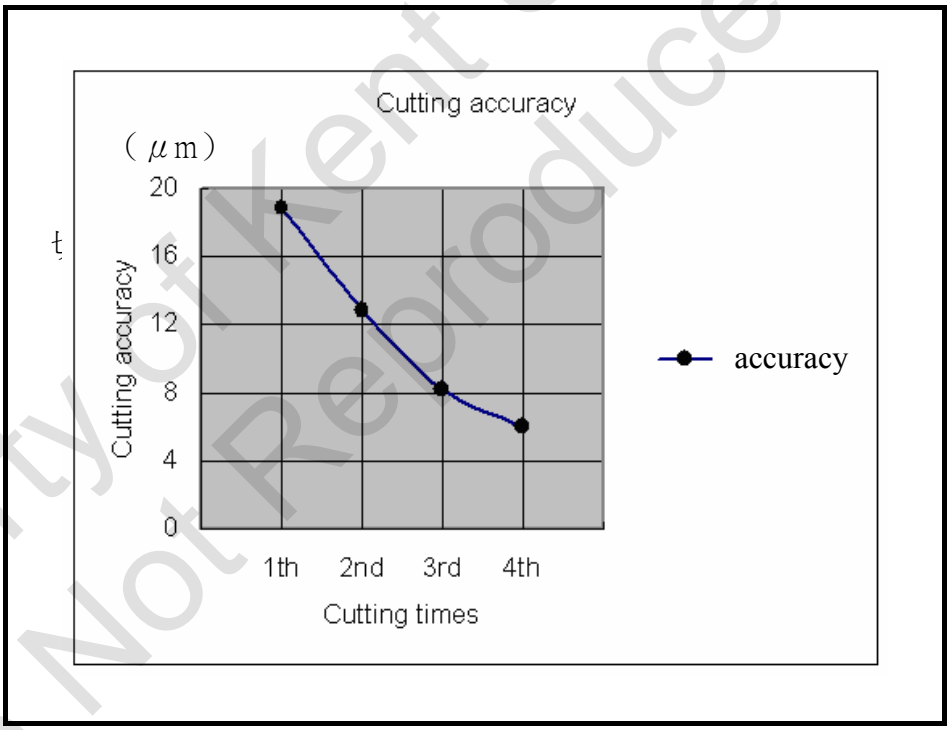

Material：SKD11	ON TIME：1st cut: 16
Thickness：40 ㎜	2nd cut: 6
Wire Dia.：0.25 ㎜	3rd cut: 4
	4th cut: 2

＊The value of ON TIME will affect the cutting accuracy and surface finish. The material and thickness of workpiece and wire diameter will also effect the result.

Property of Kent USA
Do Not Reproduce

8.2 Procedures of Skim Cut

Besides reducing ON TIME, Wire tension, Water pressure and Servo Voltage are also the factors which affect the accuracy and roughness during the skim cut.

There is small compensation value on the cutting path for 1st slim cut. It's a little bit increment on the cutting depth.
The cutting paths of skim cuts (from 1st to 4th cut) is shown as Follow.

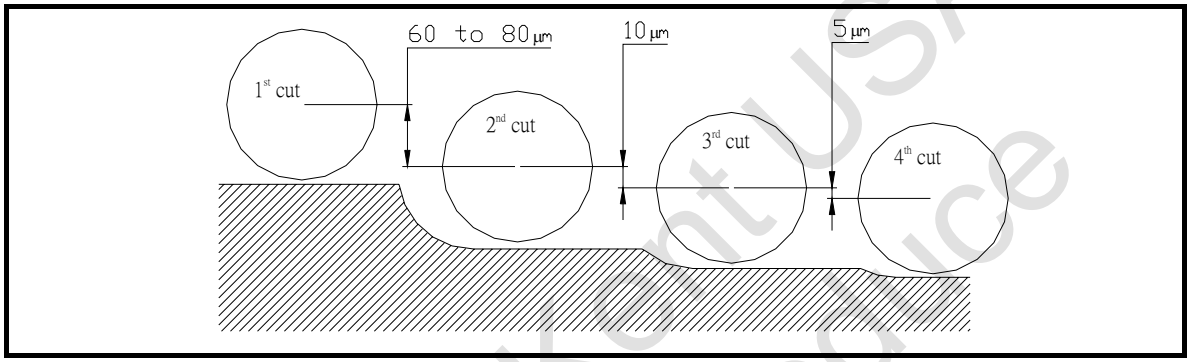

! Note

EDMing with the EDM DATA is provided by the CNC controller.
For high accuracy workpiece, test burn is recommended.

8.3 Specifications of EDM DATA

＊ Servo Voltage（SV）

Servo Voltage will effect the feed rate.

The accuracy of Verticality can be changed by FEED Rate (Adjusted by Servo Voltage). Shown as below:

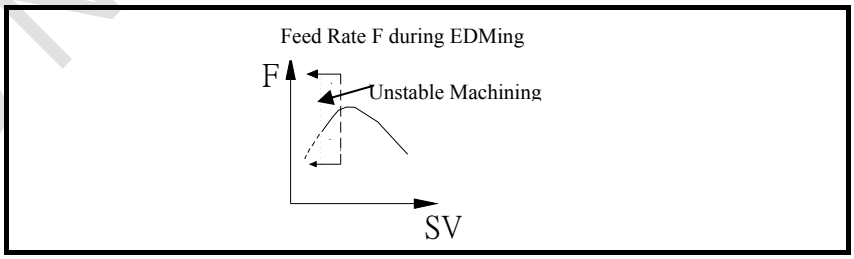

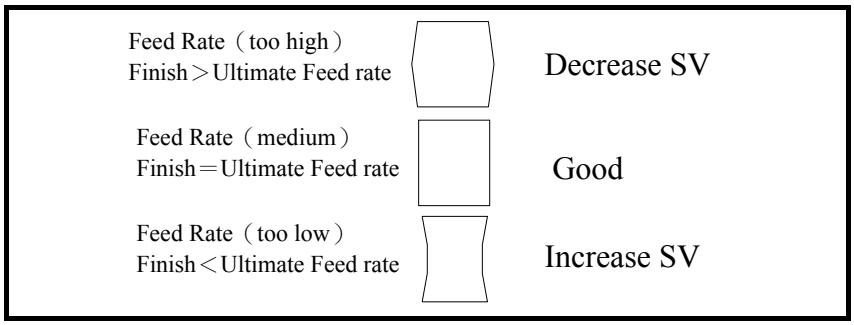

Property of Kent USA
Do Not Reproduce

＊ ON TIME

ON TIME will change the surface roughness a lot.

Decrease the ON TIME for more Skim Cuts.

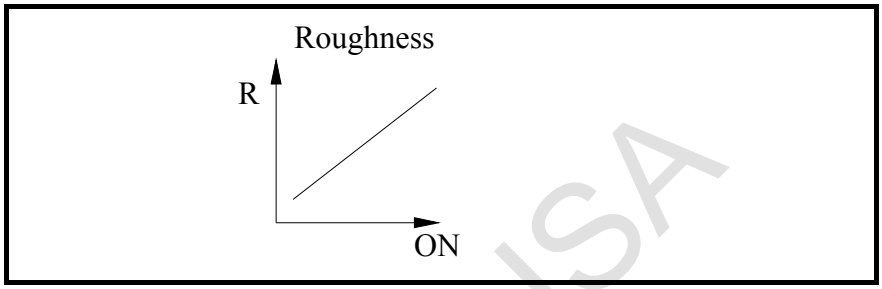

Example：

1st cut：ON TIME＝15~17

2nd cut：ON TIME＝6~8

3rd cut：ON TIME＝3~5

4th cut：ON TIME＝2

＊ Wire Tension（WT）

Wire tension will effects the accuracy of Corner Cut.

Set the wire tension higher than the setting in 1st cut.

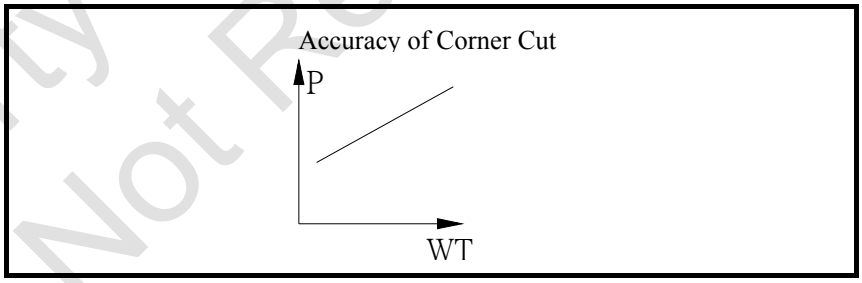

Property of Kent USA
Do Not Reproduce

8.4 Program for Skim Cut

During the skim cut, the machine will cut the workpiece with the same cutting graphic.

（Example 1） Main program (Skim Cut: 4 times, final cut off; 1 time)

【Main Program】

O9930（Main Program）：

G94F1.5; →Feed Rate Setting
S1D0; → Call EDM S- Code #1 and compensation D#0
M98P9931; →Call Program number 9931.
S2D1F1.2; →Call EDM S- Code #2 and compensation D#1
M98P9931; →Call Program number 9931
S3D2F1.2; →Call EDM S- Code #3 and compensation D#2
M98P9931; →Call Program number 9931
S4D3F1.2; → Call EDM S- Code #4 and compensation D#3
M98P9931; →Call Program number 9931。
S1D4F1.5; → Call EDM S- Code #1 and compensation D#4
M98P9932; →Call Program number 9932。
M02; →END Program

【Graph Program】

O9931（Sub program 1）
G92X0.Y0.
G42 G91 G01 Y5.;
X5.;
Y10.;
X-10.;
Y-10.;
X2.5;
Y-1.;
F0.2M70; →Retract（Cutting wire retract to start）
M99; →End Sub Program

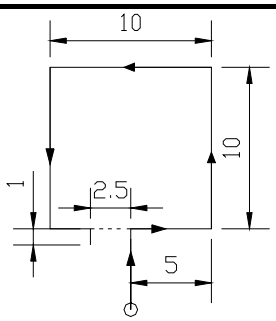

Start Point

Property of Kent USA
Do Not Reproduce

【Cut off Program】

O9932（Sub program 2）：

G92X0.Y0.;

G41 G91 G01 Y5.;

X-2.5;

Y-0.5

M99 →Sub Program END

Input G41 for a compensation D during cut off process.

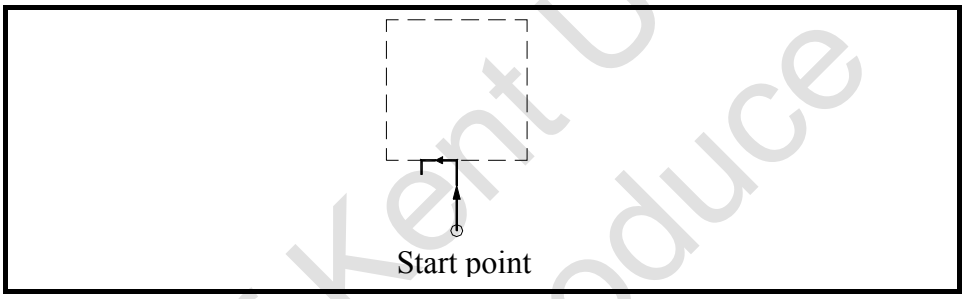

（Example 2） Start hole is inside the Final parts

If the start hole is inside the final parts, the waste parts will fall down during the first cut. Use M00 command to stop the machine in order to remove the waste parts. Same procedure has to be done for the 2nd and others cuts.

【Main Program】

O9940（Main Program）：

G94F1.5; →Feed Rate Setting

S0D0; → Call EDM S- Code #1 and compensation D#0

M98P9941; →Call program number 9941

M00; →Hold

S2D1F1.2; → Call EDM S- Code #2 and compensation D#1

M98P9941; →Call program number 9941

S3D2F1.2; → Call EDM S- Code #3 and compensation D#2

M98P9941; →Call program number 9941

S4D3F1.2; → Call EDM S- Code #4 and compensation D#3

M98P9941; →Call program number9941

M02; →Program End

Hold the machine and remove the waste material.

Property of Kent USA
Do Not Reproduce

【Graphic Program】

O9941（Sub Program）：

G92 X0.Y0.;

G41 G91 G01 Y-5.;

X5.;

Y10.;

X-10.;

Y-10.

X5.;

G40Y5.;

M99;

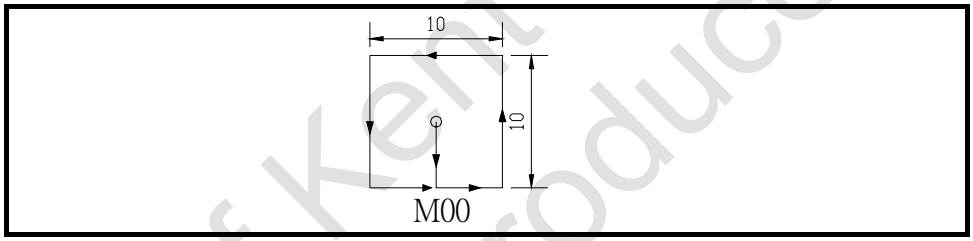

（Example 3） For Taper Cut Program

For taper and Vertical cutting, the cutting program should be changed to Taper and Vertical mode.

【Main Program】

O9950（Main Program）：

G94F1.5; →Feed Rate Setting
S0D0; → Call EDM S- Code #0 and compensation D#0
M98P9951; →Call program number 9951（1st taper cut）
M00; →Hold（Remove the water material）
S0D0; → Call EDM S- Code #0 and compensation D#0
M98P9952; →Call program number 9952。（1st vertical cut）
M00; →Hole （remove the water material）
S2D2F1.2; → Call EDM S- Code #2 and compensation D#2
M98P9951; →Call program number 9951（2nd taper cut）
S2D2F1.2; → Call EDM S- Code #2 and compensation D#2
M98P9952; →Call program number 9952。（2nd vertical cut）
M02; →Program End

Property of Kent USA
Do Not Reproduce

【Graphic program for taper cut】

O9951（Sub program 1）：

```
G92X0.Y0.;
G41 G51 T5. G91 G01 Y-5.;
X5.;
Y10.;
X-10.;
Y-10.;
X5.;
G40G50T0.Y5.;
M99;
```

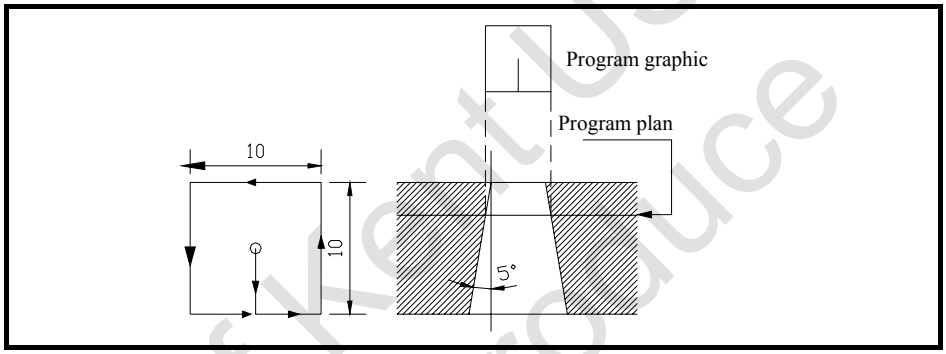

【Graphic program fro vertical cut】

O9952（sub program 2）：

```
G92X0.Y0.;
G41 G91 G01 Y-5.;
X5.;
Y10.;
X-10.;
Y-10.;
X4.;
M01;
X1.;
G40Y5.
M99;
```

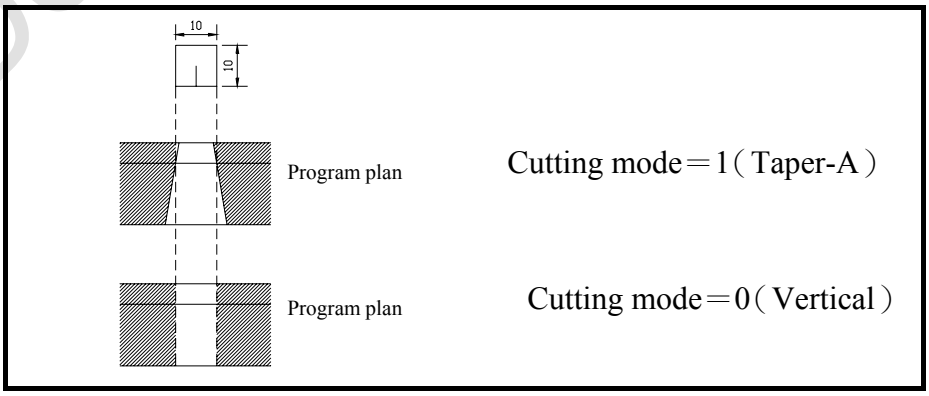

Property of Kent USA
Do Not Reproduce

8.5 Things to be careful during Skim Cut

8.5.1 Taper Cut

Do the following procedures for inner hole taper cut.

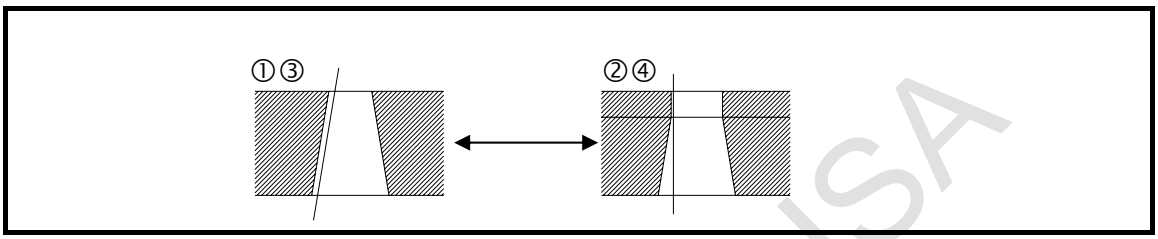

① Do the first taper cut. (Taper cut)
② Do the first vertical cut (Vertical cut)
③ Do the 2nd taper cut. (2nd Taper cut)
④ Do the 2nd vertical cut. (2nd vertical cut)

For taper cut, please do 2 or more times skim cuts. Taper cut cannot be done in 1st cut.
For vertical cut, the same machining condition should be used for 1st and 2nd cut.

8.5.2 Punch program

In order to finish the punch cut, the un- cut section has to be done in one cut.
In general cases, there is 2- 5 mm uncut section in the workpiece. This length is varying on the application.
For long and wide products, 2 start holes on each end as shown is recommended.

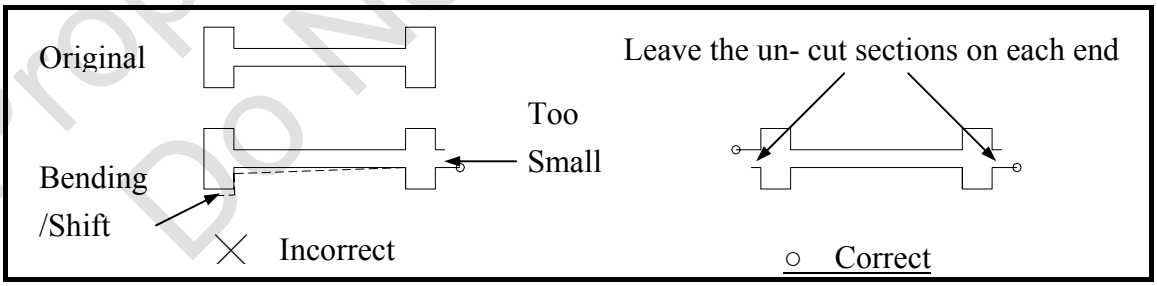

Leave an un- cut arc section for cutting a round product.

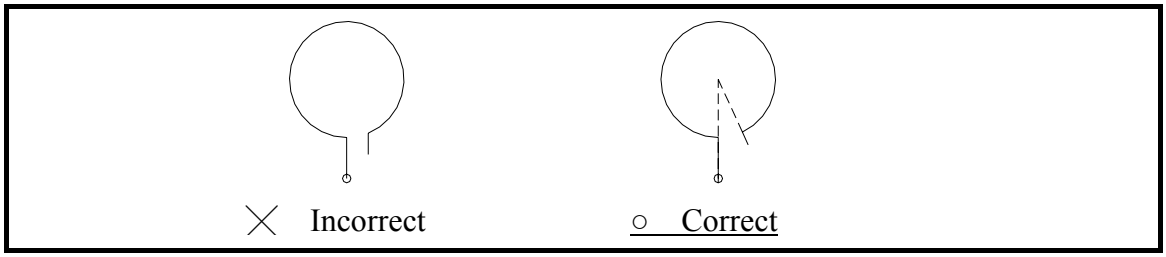

Property of Kent USA
Do Not Reproduce

9 Other Manual Functions

Except Edge Find, Center Find and Slit functions, KENT USA WEDM provides more function for position：

① Out Circle Center

② Side Center

③ Coor. Table

9.1 Out Circle Center

Calculate the center position via selecting points from the arc. Use the Edge Find function to select points and save the coordinate. After the calculation, machine can find the center automatically.

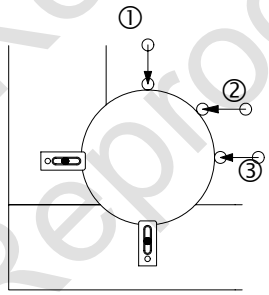

Example (Choose 3 points to find center): Use manual mode to move the probe to point①②③, via Edge function to find the position of each point.

Procedure：

（1） Press《JOG》to move the cutting wire close to the workpiece (Shown as above①)

《JOG》
《＋X》 《－X》
《＋Y》 《－Y》

Property of Kent USA
Do Not Reproduce

（2）Press【Manual】to enter 【Out Circle Center】

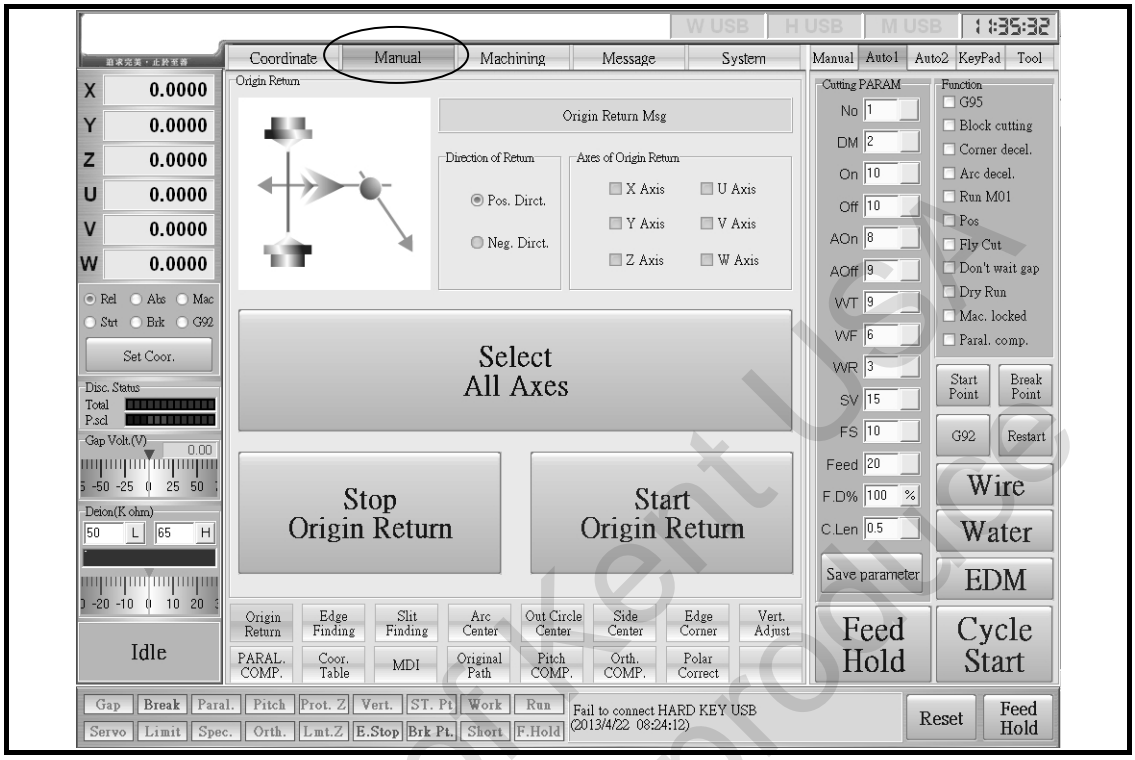

（2）Press《Out Circle Center》to enter Arc Center screen.

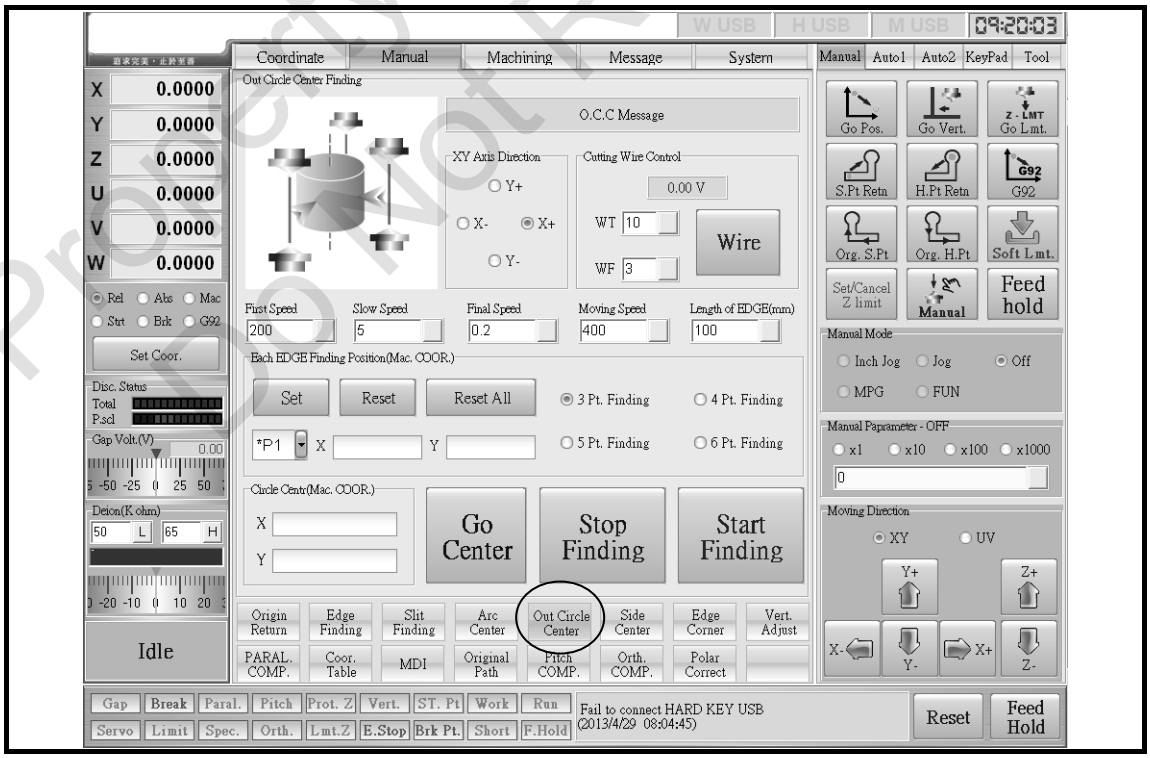

Property of Kent USA
Do Not Reproduce

（3）In Arc Center screen, setup wire tension and wire feed rate.
（WT＝10，Wire Speed＝3）

（4）《XY axis direction》Selection

（5）Set up《Setup Speed》
＊Pease refer to4.11.1(3) to learn more.

（6）Edge Find points (Mechanical Coordinate)

1. Select 3~6 center points：The more testing points, the more accurate it will be. However, it will spend more time to do the edge find points.
2. [SET]： Input the coordinate of Arc into P* X [ ]、Y [ ] .
3. [Reset]：Clear the current coordinate.
4. [All Reset]：Clear all of the coordinates.

（7）Select《Center》, the machine head will adjust its wire speed and wire tension and then start the Edge Find process. When Edge Find is completed, * on P1 will disappear. Edge Find Coordinate (Mechanical Coordinate) is represented by P1 at this time. After that, the machine head will return to the starting point.

（8）Move the machine head to the next Edge Find position.

（9）Repeat step（7）and（8）, and save 3~6 points coordinates.
＊ 3 points at least.

（10）When（9）is done, the Center Coordinate will be shown as X[ ]、Y[ ]。

（11）Press《Center Return》and move the machine head to center Position
＊ Cut down the cutting wire is required.

Property of Kent USA
Do Not Reproduce

9.2 Side Center

Use Side Center function to find the side center of workpiece.

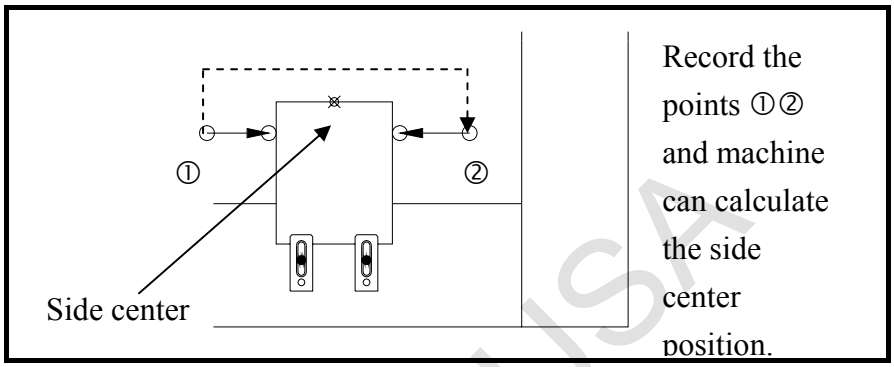

Procedure：

（1）In【JOG】Mode, move the cutting wire to ① position.

（2）Press【Manual】to enter manual screen.

（3）Press《Side Center》and enter Side Center screen.

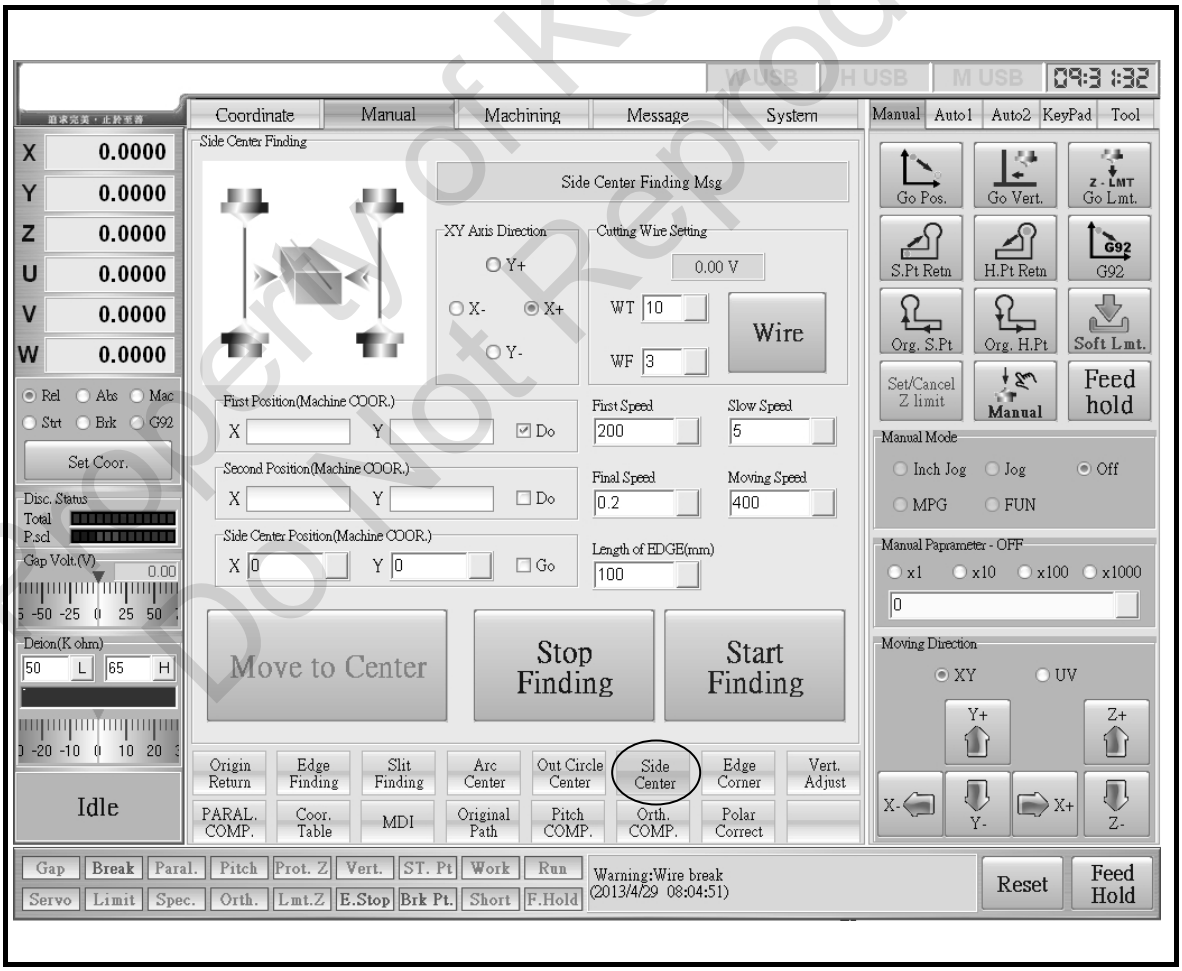

Property of Kent USA
Do Not Reproduce

（4）Setup Wire tension and Wire Feed rate.
（Wire Tension＝10，Wire Feed Rate＝3）

（5）At《XY axis direction》select edge finding direction.
（Ex: X direction）

（6）Select “Side Center”, the machine head will move to the side center position.

1. Press Go：After finding the second point, machine head will move to the center of the workpiece automatically.
2. Cancel Go：After finding the second point, machine head
will return to the Start point.

（7）Press Do “First Point Coordinate”。
＊When Edge Find is complete, “First Point Coordinate” will appear automatically.

（8）Press《Start Side》,《WIRE》and《Edge Find》will start automatically.

（9）When the message “Searching first point” appears, that means Edge find is complete.

（10）Press Do “Second point Coordinate”.
＊When Edge Find is complete, “Second Point Coordinate” will appear automatically.

（11）Repeat step（6）、（7）.

（12）Press《Start Side》,《WIRE》and《Edge Find》will start automatically.

（13）Press《Return to Side Center》, machine head will move to the side center
＊Cut down the cutting wire is required.

! Note

＊ Use Air gun to blow the workpiece before doing the Arc Center and Side Center.
＊ The functions of Arc Center and slide Center is to find the center position, it won’t move the cutting wire to the center automatically.
This center position is used as a reference Coordinate.

Property of Kent USA
Do Not Reproduce

9.3 Coor. Table

If there are some dies need to be cut in a workpiece, there will be some starting holes in NC program.

Therefore, if the wire has to return to the start point due to the wire broken or power is off during the 2nd or later die, it only can return to the starting hole of current cut.

Original Point Return can set the first starting hole as reference original point. If the machine cannot return to the starting hole, it can be return to this reference point for machining.

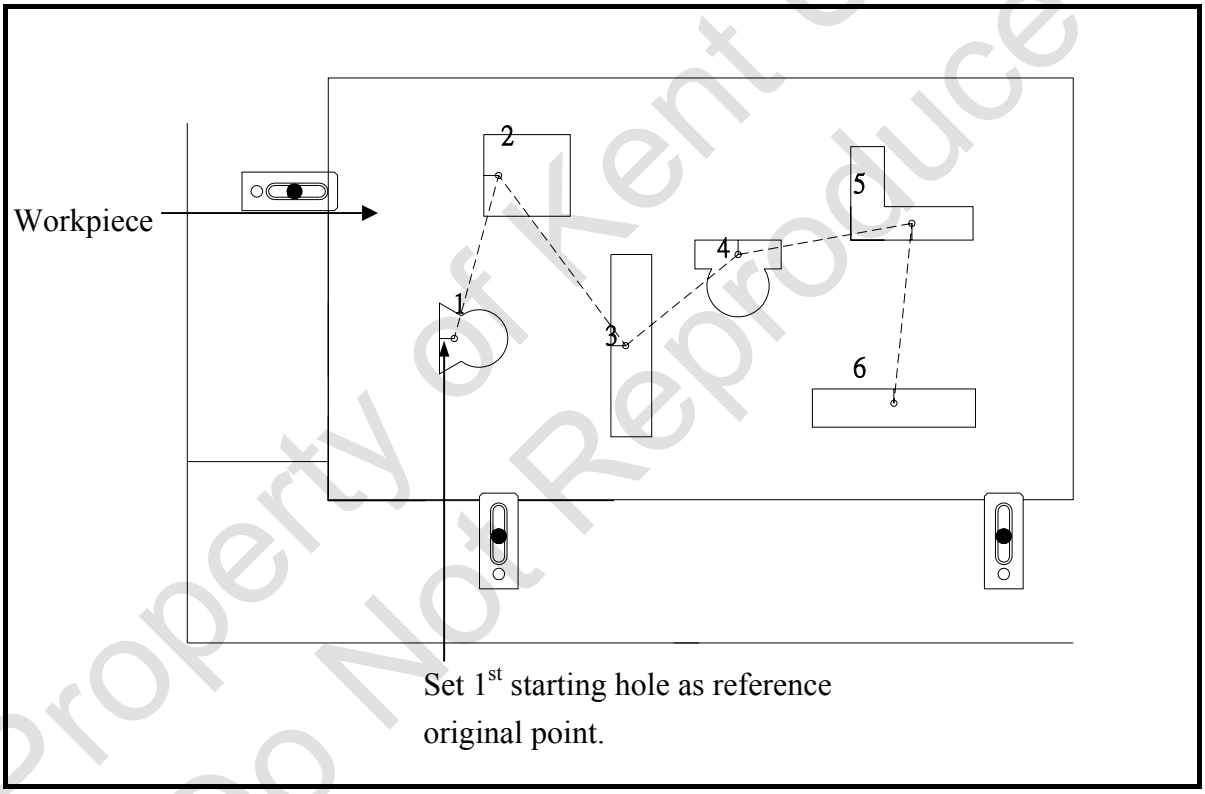

9.3.1Original point Setup

Procedure：

（1）Finish the workpiece installation and adjust the wire position.

（2）Press【Manual】key and enter “Coor. Table” screen.

（3）2 kinds of coordinate record(mechanical coordinate)：

1. Position and coordinate record.
2. Set G54~G59 to the program.

Property of Kent USA
Do Not Reproduce

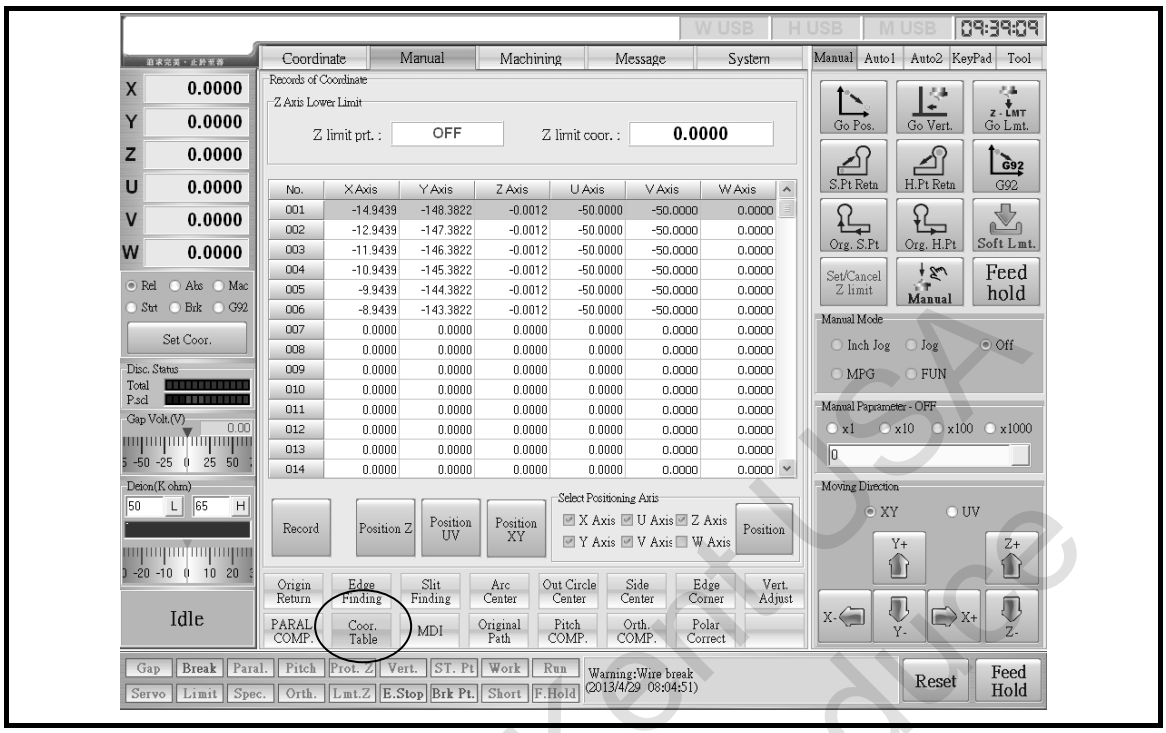

1. Position and Coordinate Record (mechanical coordinate)：
   A. When the machine is at the saving point, use the mouse or ↑、↓ key on the key board to select the saving group. Press Record to save.
   B. 3 approaches to position：
      I. Assign the position group and then press Position Z Position UV、Position XY , the machine will move to the record position.
      II. After assign the position group, choose single axis or multi axis under the “Positioning axis selection”. Next press Position, the machine will move to the record point based on the assign instruction.
      III. Move the mouse to the position group and then right click, a message will appear (Do you want to position to No. 00??). When pressed the OK Button, Z axis will move right after XYUV axis moved to the record point.

! Note

＊ When the machine is operating the fixed displacement, be sure upper and lower machine head are at the safe zone.

Property of Kent USA
Do Not Reproduce

2. Set G54~G59 to the program：

Operation of G54~G59 and its using limit.

I. Command format：G54 <X1.0> <Y1.0> <P10>

"G54" represent mechanical coordinate positioning(G54~G59 Default record number of the mechanical coordinates 001~ 006)

"<?>" Default parameter can be omitted.

X, Y parameter of the increment relative to G54, if omit X, Y , then replace it by 0,0.

"P" parameter forces the specific coordinate to record the number. If there is P parameter, then default G54~G59 coordinates to record number.

Ex：G54 P7 No.007 positioning coordinate. The original G54 positioning coordinate will become invalid.

II. Input G54 ~ G59 to the workpiece program for mechanical positioning, but need to be write before G92.

III. DO NOT start the parallel compensation function, but it is fine operate the simulate parameter such as zoom, rotate, mirror etc.

Appendix：G54~G59 function

Description：

1. G54~G59 in program can be used to select the working coordinate system and set up the starting hole position in program. Controller can switch the coordinate system or reset starting hole by the command in program.

Procedure：

1. Complete the original point setting before machining.
2. Command Format：

(1)

```
N0010   G54;
N0011   G90G00X2.Y2.;
N0012   G92X2.Y2.;
N0013   …..
```

(2)

```
N0010   G54X2.Y2.;
N0011   …..
```

Property of Kent USA
Do Not Reproduce

3. Program the EDMing by the format (1) or (2) will get the same machining result.
   The G90, G00 in format (1) are modal command, it's still enable.
   In format (2) command, it will still keep the ABS/REV position command, movement command and modal command.
4. The default coordinate in system is G54.

Example：

G54(200,200) G55(190,200) G56(210,200) G57(195,205)

G57 is used as Start Point for the following example:

1.

O0012
G91
G92 X1. Y1.
G01 X2.
G01 Y3.
G55 X2. Y2.
G01 X2.
G01 Y3.
M02

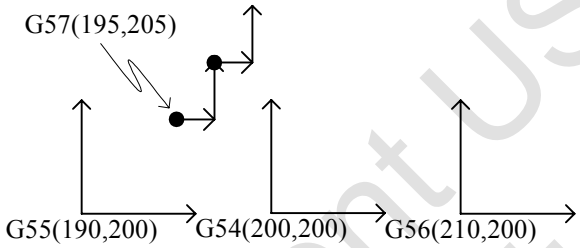

O0012	Machine	Relative	Absolute
G91	(195., 205.)	(-5.,-5.)	(-5.,-5.)
G92 X1. Y1.	(195., 205.)	(1., 1.)	(1., 1.)
G01 X2.	(197., 205.)	(3., 1.)	(3., 1.)
G01 Y3.	(197., 208.)	(3., 4.)	(3., 4.)
G55 X2. Y2.	(192., 202.)	(-2., -2.)	(2., 2.)
G01 X2.	(194., 202.)	(0., -2.)	(4., 2.)
G01 Y3.	(194., 205.)	(0., 1.)	(4., 5.)
M02	-	-	-

2.

O0013
G91
G55 X1. Y1.
G01 X2.
G01 Y3.
G92 X2. Y2.
G01 X2.
G01 Y3.
M02

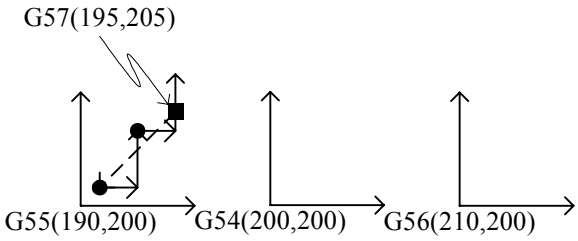

Property of Kent USA
Do Not Reproduce

O0013	Machine	Relative	Absolute
G91	(195., 205.)	(-5.,-5.)	(-5.,-5.)
G55 X1. Y1.	(191., 201.)	(1., 1.)	(1., 1.)
G01 X2.	(193., 201.)	(3., 1.)	(3., 1.)
G01 Y3.	(193., 204.)	(3., 4.)	(3., 4.)
G92 X2. Y2.	(193., 204.)	(3., 4.)	(2., 2.)
G01 X2.	(195., 204.)	(5., 4.)	(4., 2.)
G01 Y3.	(195., 207.)	(5., 7.)	(4., 5.)
M02	-	-	-

! Note

The G92 added below G01、G02、G03… will reset the ABS coordinate value only. It won't change the REV. Coordinate value.

3.

O0014
G91
G55 X1. Y1.
G01 X2.
G01 Y3.
G56 X2. Y2.
G01 X2.
G01 Y3.
M02

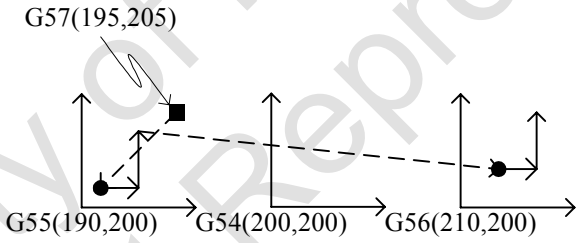

O0014	Machine	Relative	Absolute
G91	(195., 205.)	(-5.,-5.)	(-5.,-5.)
G55 X1. Y1.	(191., 201.)	(1., 1.)	(1., 1.)
G01 X2.	(193., 201.)	(3., 1.)	(3., 1.)
G01 Y3.	(193., 204.)	(3., 4.)	(3., 4.)
G56 X2. Y2.	(212., 202.)	(22., 2.)	(2., 2.)
G01 X2.	(214., 202.)	(24., 2.)	(4., 2.)
G01 Y3.	(214., 205.)	(24., 5.)	(4., 5.)
M02	-	-	-

Property of Kent USA
Do Not Reproduce

10 MDI Mode

Press MDI under【Manual】mode. Single block NC program can be executed under《MDI》mode. By using single block NC command to move machine table in certain distance or execute the cutting.

10.1 Manual Data Input

Procedure：

（1）Press《MDI》and switch to MDI mode.

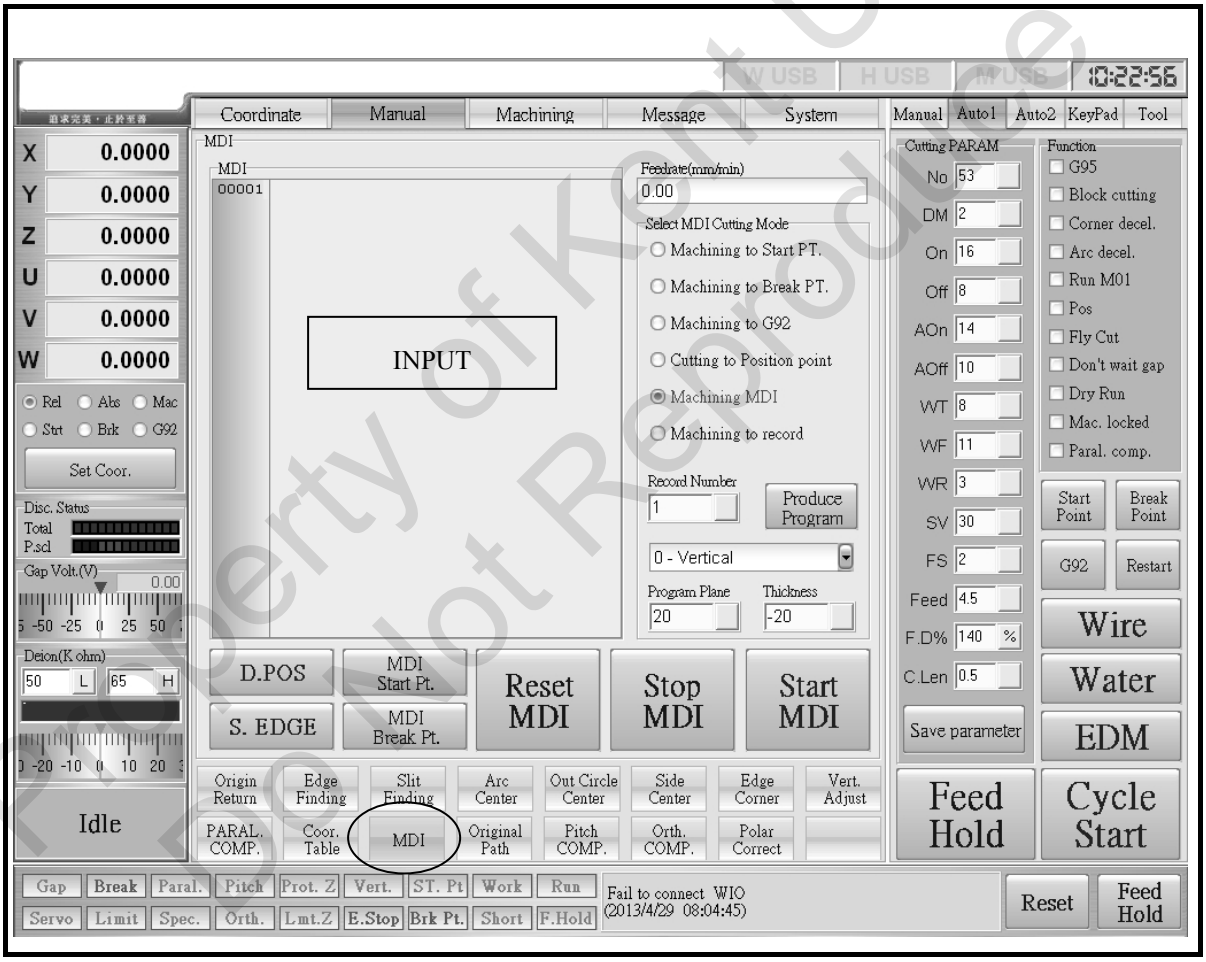

Property of Kent USA
Do Not Reproduce

（2）Press Produce Program to produce NC program or input the NC program in the edit area.

＊ G92 need to be added when input the NC program, otherwise ”unset G92” alert will appear.

（3）Under “Select MDI Cutting Mode” press《Machining MDI》to verify Cut Mode, Program Plane, Workpiece Thickness then type the NC program in the input area.

EX：G01X45. Cut Mode：0-vertical、Program Plane：0、Workpiece Thickness：60 mm

Input
《G》《0》《1》《X》《4》《5》《.》

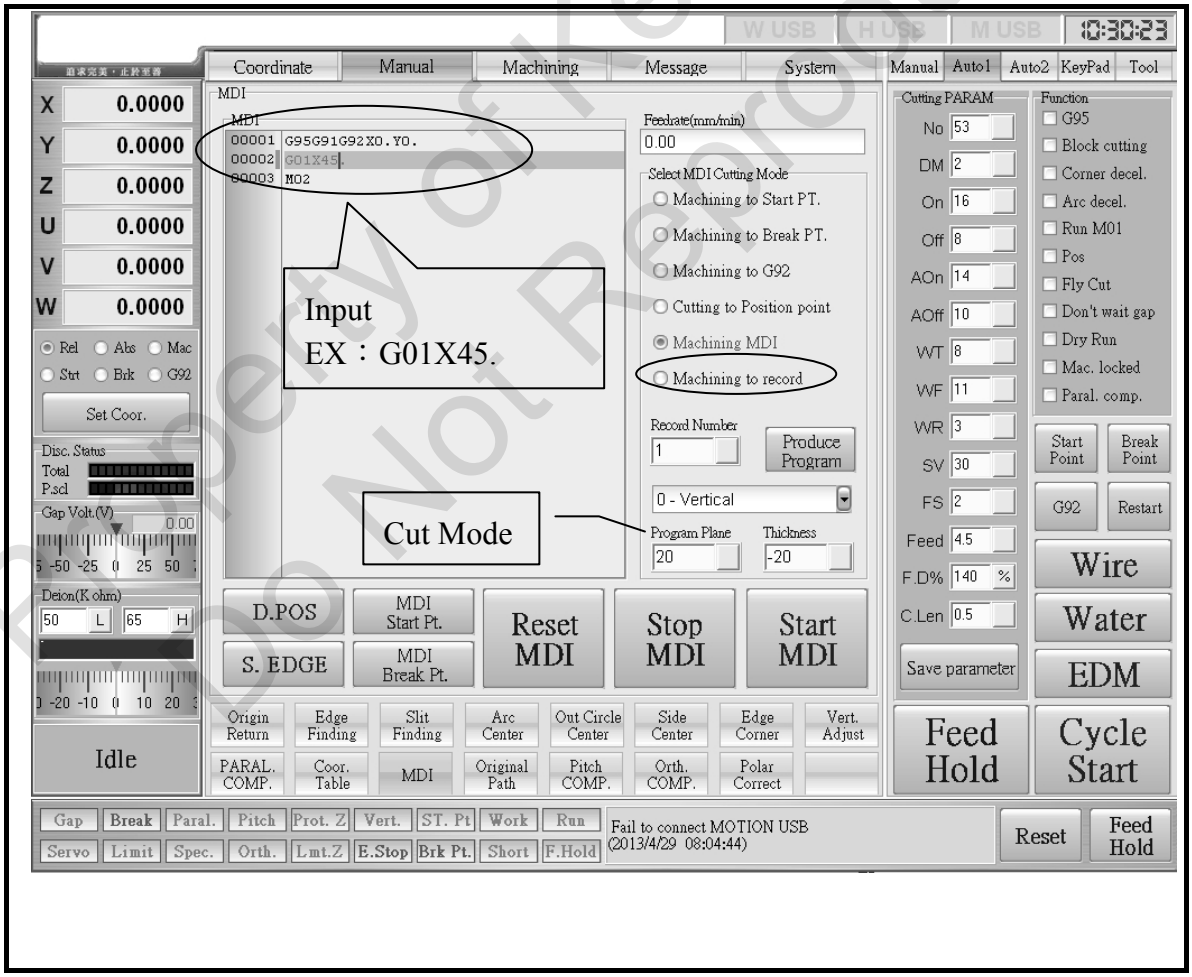

Property of Kent USA
Do Not Reproduce

（4）To move the Table, press《Auto1》→《Dry Run》, and then select《Start MDI》.

《Dry Run》→《Start MDI》

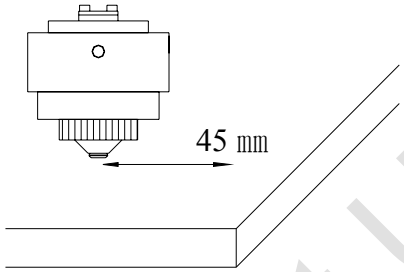

By using G01X45 command to move machine head 45mm on +X direction.

（5）Use Single command to cut wire cut: Press《WIRE》《WATER》《EDM》, and then《Start MDI》to start.

（6）To return to machining start point press MDI Start Point, machine will return to start point at a dry run speed.

（7）To return to machining broken wire point press MDI Break Point, machine will return to broken wire point at a dry run speed.

（8）Either press Stop MDI or other Feed Hold button can stop Dry Run or other processing.

（9）To reset the current machining, press Reset MDI or other Reset to clear the recent working status.

! Note

Do not press《Dry Run》key while single command wire cut. Otherwise the wire will be broken because of the fast feed rate.

✎ Hint

While single command wire cut, working parameter can be adjust.

Property of Kent USA
Do Not Reproduce

10.2 D.POS (Discharge Position) Mode：

Main function :“Manual Discharge”. Coordinate《WIRE》《WATER》key to operate “Manual Feed” machining.

Procedure：

（1） Set the working parameter On、Aon, but the value cannot be too big. Otherwise the wire will touch the workpiece and broken easily.

（2） Start《WIRE》《WATER》《EDM》《D.POS》on the remote control or on screen to operate lower speed cutting when the workpiece and wire are not under short circuit situation.

✎ Danger

For personal safety, do not touch the wire at this point. D. POS Mode has to be closed when operating normal machining.

10.3 S.EDGE (Spark Edge) Spark Manual

Main function: By using weak energy to do vertical alignment or to confirm whether the wire is perpendicular to the workpiece or not.

（1） Clean upper and lower machine head with air gun.

（2） Since the energy of 《S.EDGE》is stabled, the value of wire feed rate and wire tension need to be adjusted.

（3） After selecting《S.EDGE》,《WIRE》《EDM》will operate automatically. Then press《D.POS》, the gap voltage will increase from 0V to 45V.

（4） Use remote control or screen to operate XU or YV vertical alignment at low speed when workpiece and wire are not under short circuit situation.

Property of Kent USA
Do Not Reproduce

10.4 MDI Mode selection

Main function: Base on the G95 straight cutting type returns to the Cutting point, Broken point, G92 point or assign cutting destination point or record point.

（1） To the cutting point：The cutting point is under the short circuit situation when operating the machining. Due to this reason, move the wire to the not short circuit situation and then reset machining. After turn on 《WIRE》《WATER》《EDM》《Start MDI》, the machine will cut to the cutting point based on the temporary machining parameter.

（2） To broken wire point：Reset machining under no short circuit situation. After turn on 《WIRE》《WATER》《EDM》《Start MDI》, the machine will cut to the broken point based the temporary machining parameter.

（3） To G92 point：Reset machining in any position and without having short circuit. After turn on 《WIRE》《WATER》《EDM》《Start MDI》, the machine will cut to the last G92 point based on the temporary machining parameter.

（4） To the fixed point：《MDI Start》, "Please turn on Water, Wire and EDM" message will appear when these conditions are not ON. After turning on《WIRE》《WATER》《EDM》, the coordinate setup window below will appear.

Property of Kent USA
Do Not Reproduce

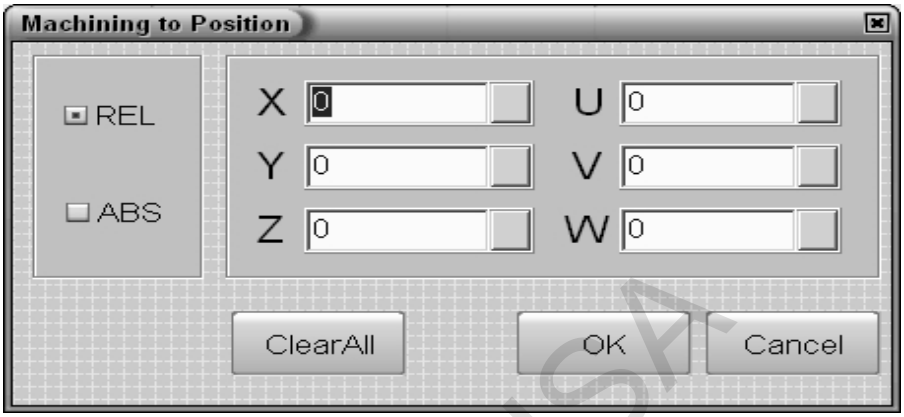

The fixed point above is setup by coordinate (ABS/REL) position to cut.

（4） MDI Program ：Refer to 10.1。

（5） Machining to record point：When operating this function, please select the recording number. Start《WIRE》《WATER》《EDM》《Start MDI》, machine will cut by the working parameter to the recording point.

＊ Recording point【Manual】→《Coor. Table》coordinate position (mechanical coordinate)

Property of Kent USA
Do Not Reproduce

11 Alarm

While the machine is malfunction, machine will stop automatically.
While the alarm appears during the graphic simulation, the simulation procedure is interrupted.
The type and content of alarm will be shown on the Alarm Screen.

11.1 Check for the Alarm Message

（1）Alarm Message is shown on the screen while the Alarm is on.

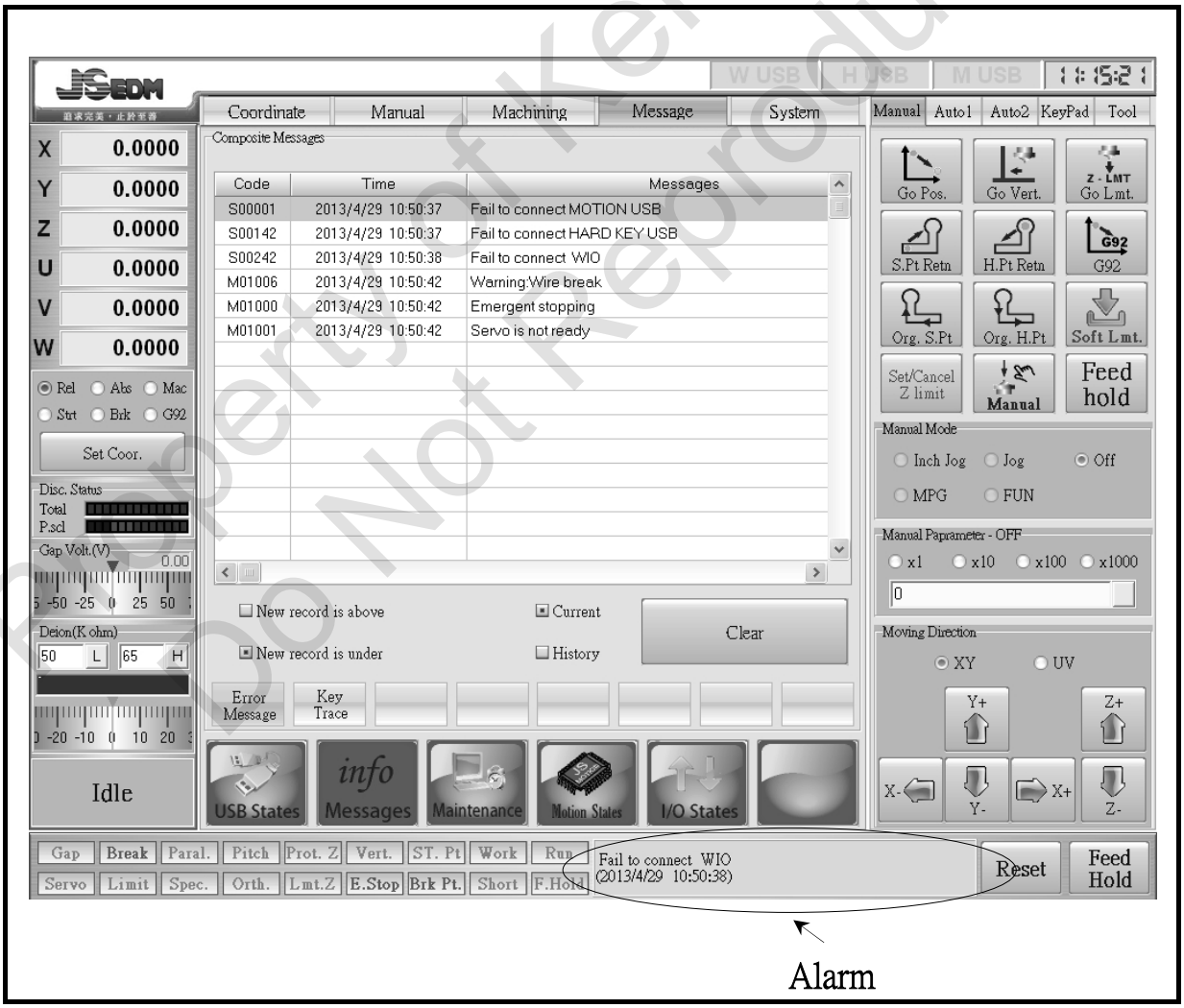

Property of Kent USA
Do Not Reproduce

（2）「Current」and「History」Alarm：

Under【Message】 press《info Message》and select「Current」and「History」to read all the alarm message.

（3）Alarm Clear：

To clear the Alarm, press《Clear》.

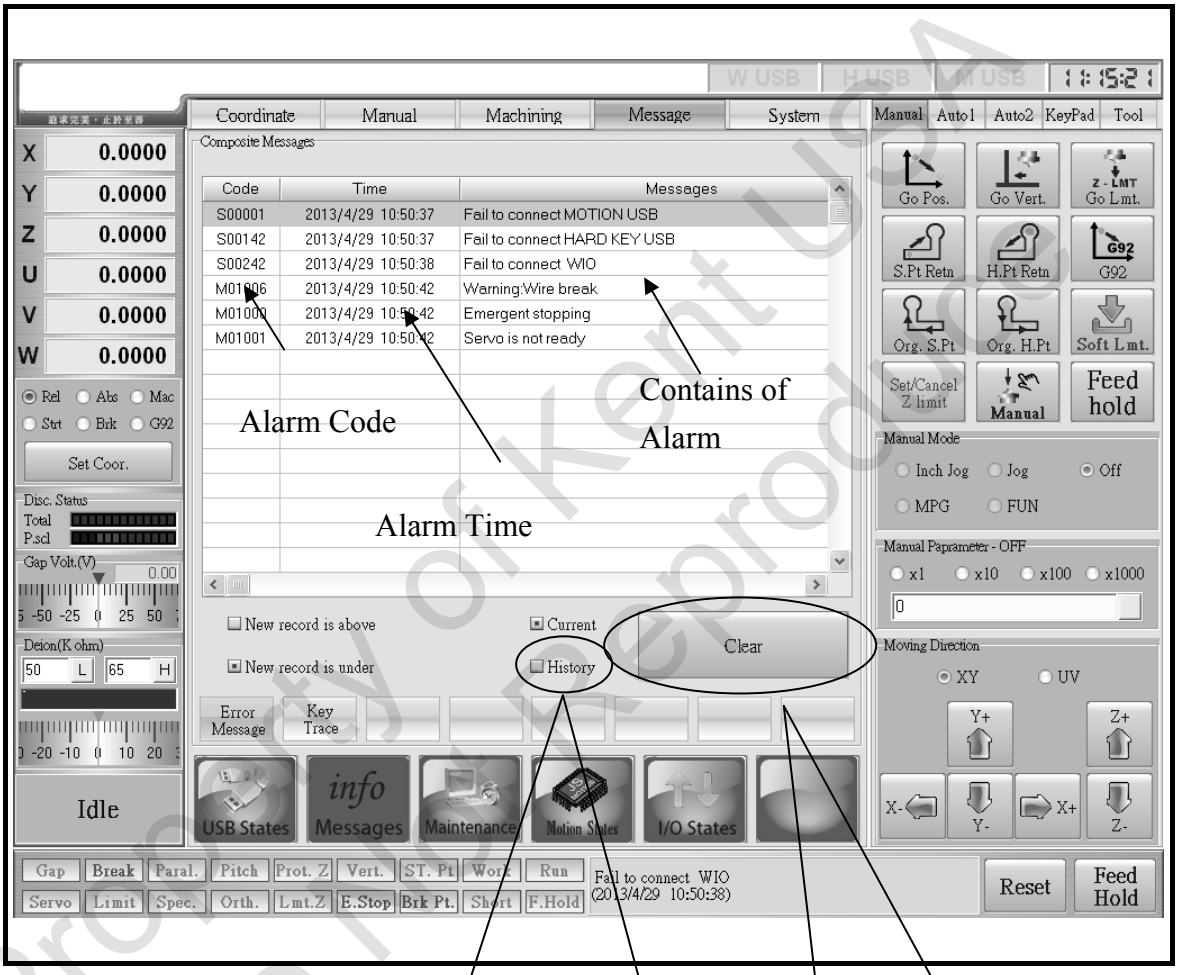

Press《History》, to read all the previous data.
Please input the password to clear all the data.

Press《Clear》, to clear alarm message.

Property of Kent USA
Do Not Reproduce

✐ Hint

∗If the Alarm cannot be cleared after《Clear》is entered, please shut down the main power and restart the machine. If the alarm still cannot be cleared, please call the technician for trouble shooting.

Property of Kent USA
Do Not Reproduce

12 Maintain/Working History

Maintain information provides the wire consumption status. Base on the information operator can replace the material and parts such as PC Board, Filters Wire, and Ionized resin. Working History provides the data of Staring time, working, and total working time.

12.1 Display Maintain information

Please enter the maintain information if the message appears. In this message if the value is over the limit, please follow the step below.

（1）Press【Message】to enter《Maintenance》screen

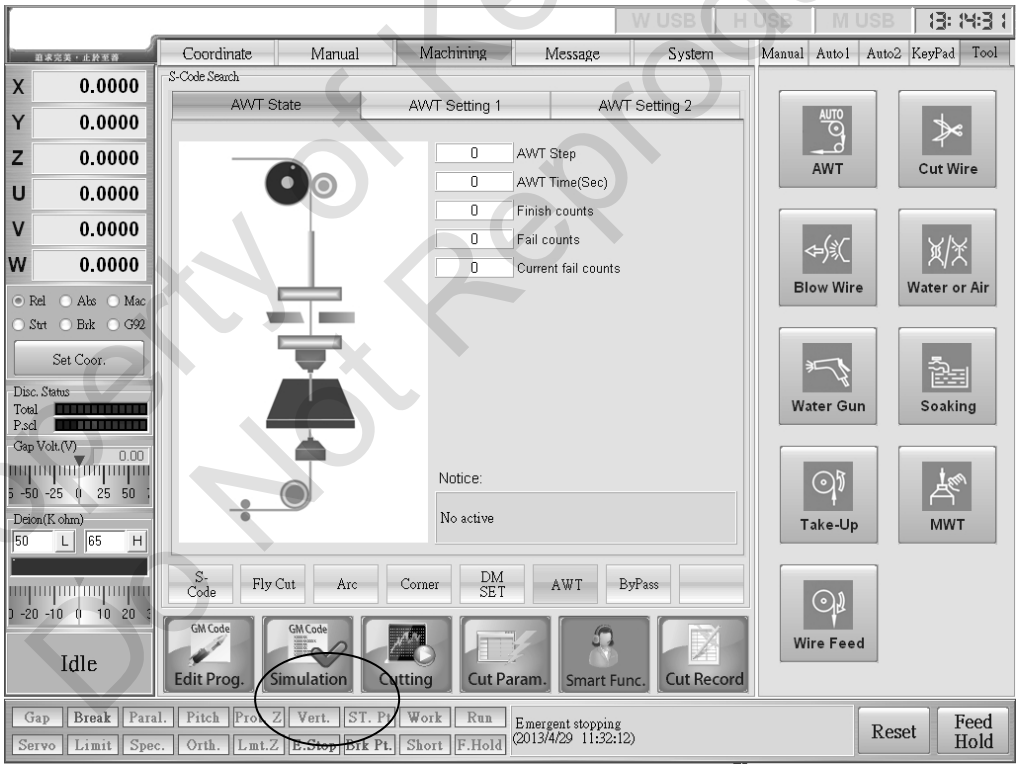

Property of Kent USA
Do Not Reproduce

（2）After cleaning and replacement are completed, change condition of the assign item under「Setting」

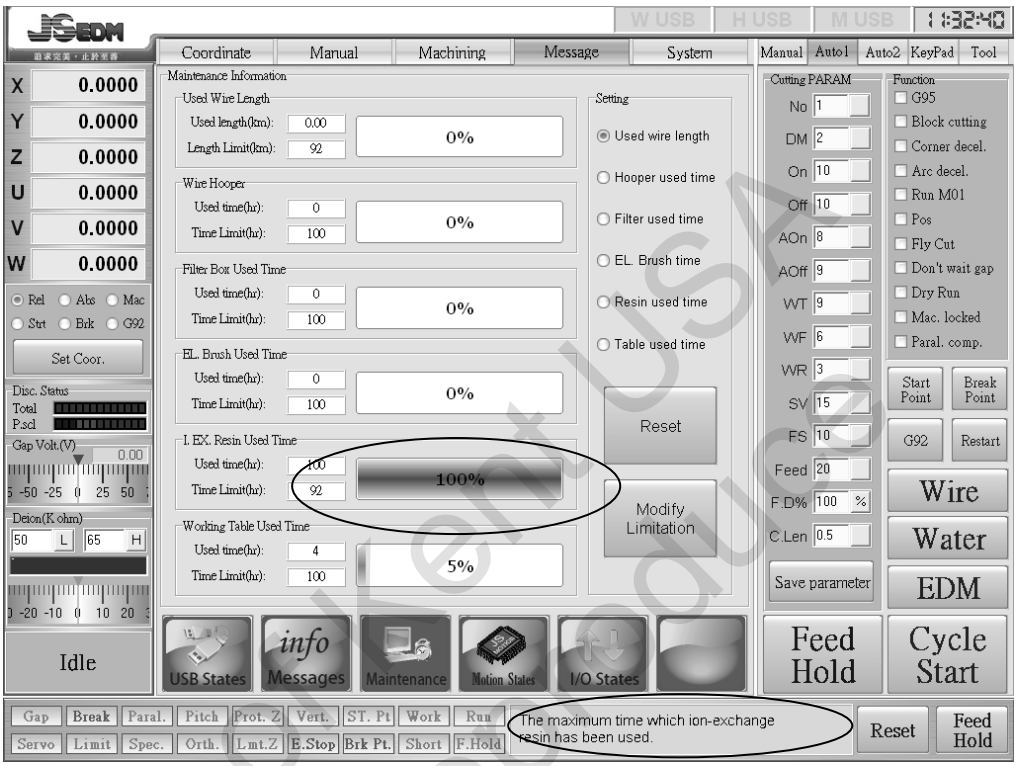

（3）To change the limit value press《Modify Limitation》, a input value window will appear. Input the assign value and then press OK.

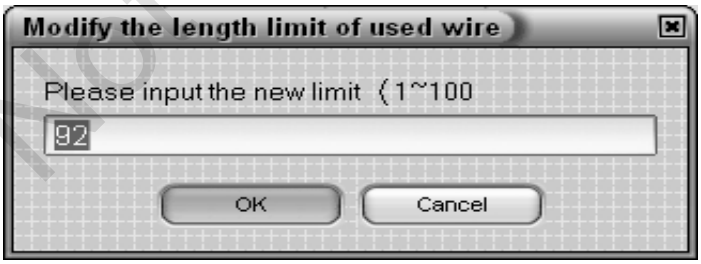

（4）To clear the time recorded press《Reset》, press OK when the message appears.

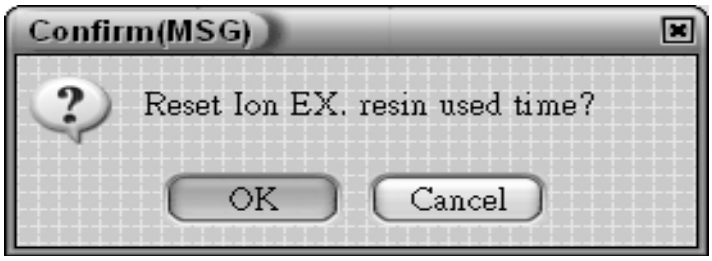

Property of Kent USA
Do Not Reproduce

12.2 Daily Maintain.

Daily Maintian		
	Maintain items	Check
1	Wire path comfirm.	
2	Working fluid comfirm.	
3	Upper/Lower electrode tips confirm.	
4	Wire collect confirm	
5	Confirmation of working fluid resistance	
6	Clean up every part of the machine after machining	
7	Working Table and Working Tank confirm	

Weekly Confirmation		
	Confirm items	Check
1	Upper/Lower wire guide and flush head	
2	Vertical correction for wire	
3	Clean up under arm and oil seal plate	

Monthly Maintain		
	Maintain items	Check
1	Tension wheel suface comfirm	
2	Path of wire winding to every wheel confirm	
3	Process of cleaning fluid cooler filter	

Three Month Maintain		
	Maintain items	Check
1	Clean upper/lower machine head parts	
2	Replace working fluid and clean water tank and internal float.	
3	Check upper/ lower ground wire.	
4	Check upper/lower machine head surface.	

Property of Kent USA
Do Not Reproduce

12.3 Maintain Procedure

（1）Wire path confirmation（Auto and Manual Threading）

Auto Threading：

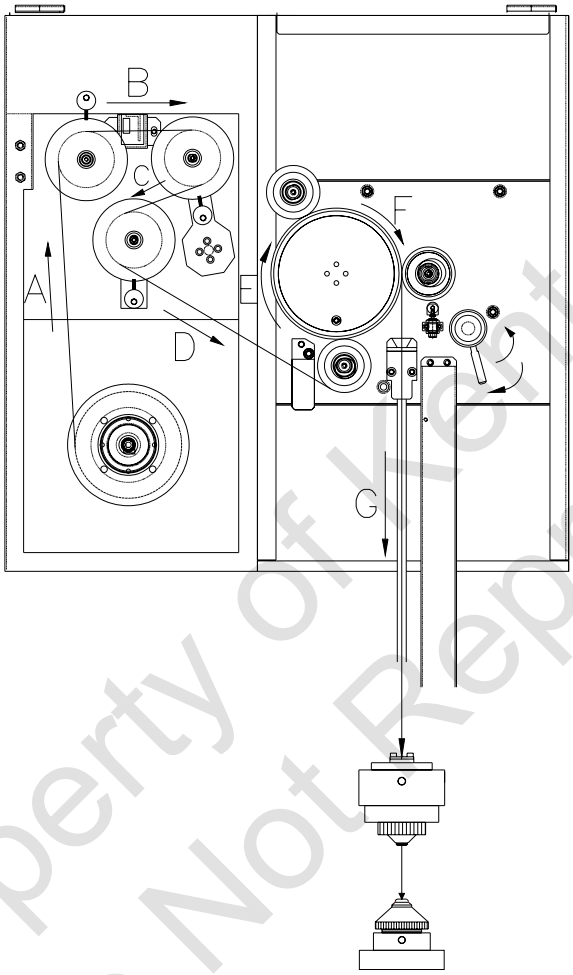

Property of Kent USA
Do Not Reproduce

Manual Threading：

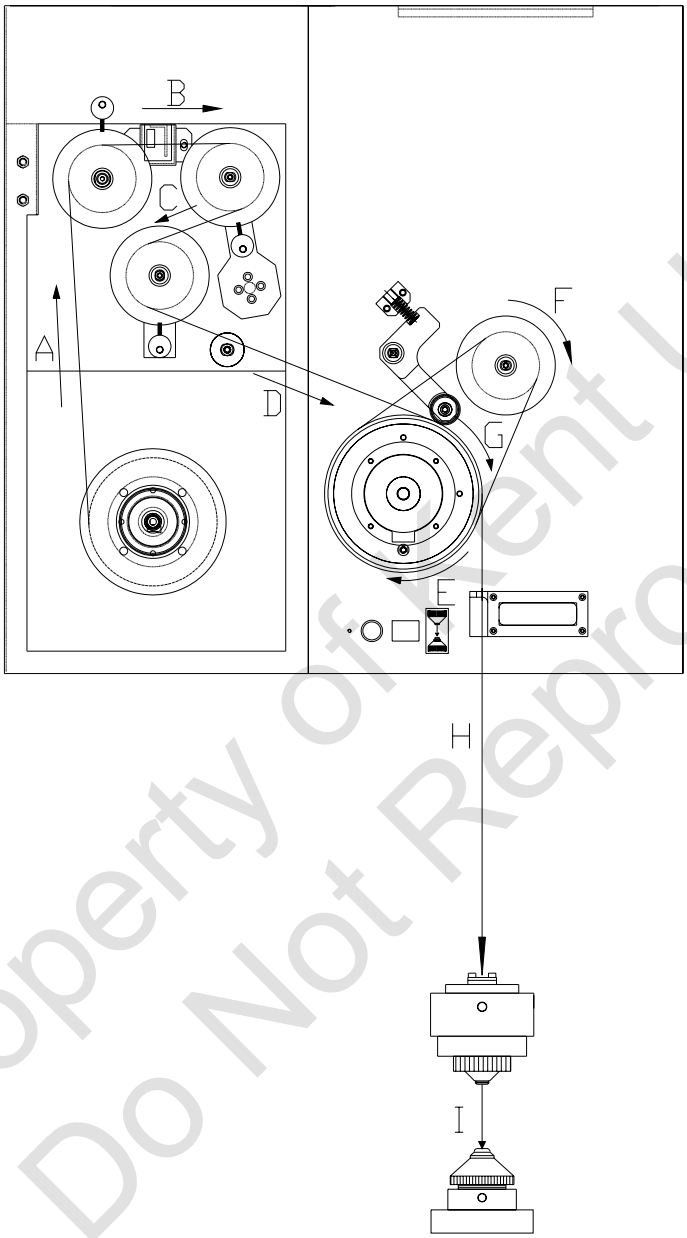

Property of Kent USA
Do Not Reproduce

（2）Working fluid verification

Open the water tank cap to check the condition of working fluid and filter. The following figure is the front view of W-430 flush type water tank. Other types of water tank will be shown in appendix (I.)

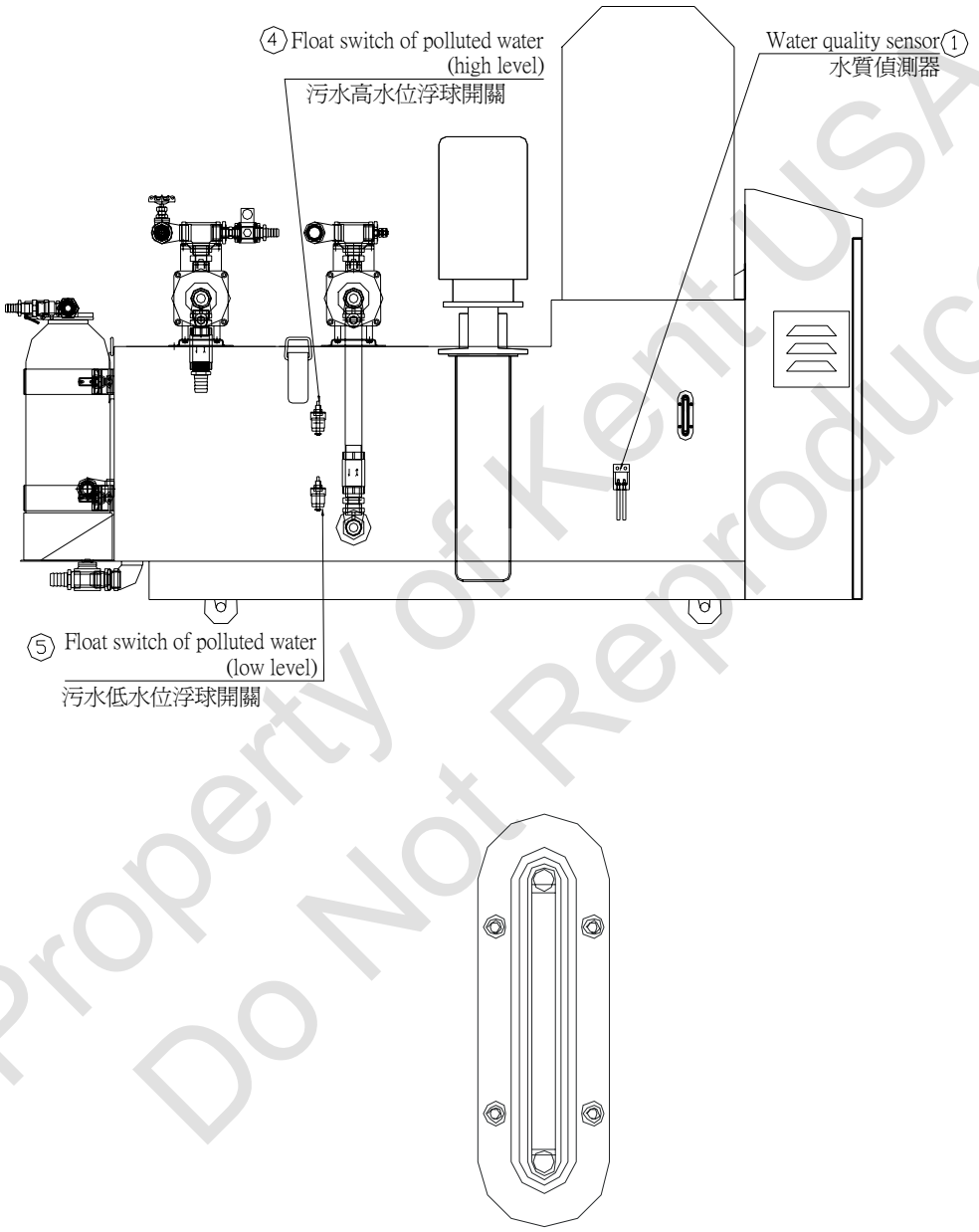

※This example has taken W-B430 flush type water tank for instance.

※When the water table window gets dirty; please clean it through the metal hole on the top of the water system.

W-B430 、Wi-430 submerge type water tank side view

Property of Kent USA
Do Not Reproduce

Please check the following when the machine power is on：

（1） Please check the water height of the sewage tank and clean sink before turn on the machine power.

（2）If the sink is too dirty, please turn off the machine and replace the filter.

【Procedure of filter replacement】

1. Power off the machine, and open the acrylic cover which is on the top of the filter.
2. Pull out the connector on the top of the filter.

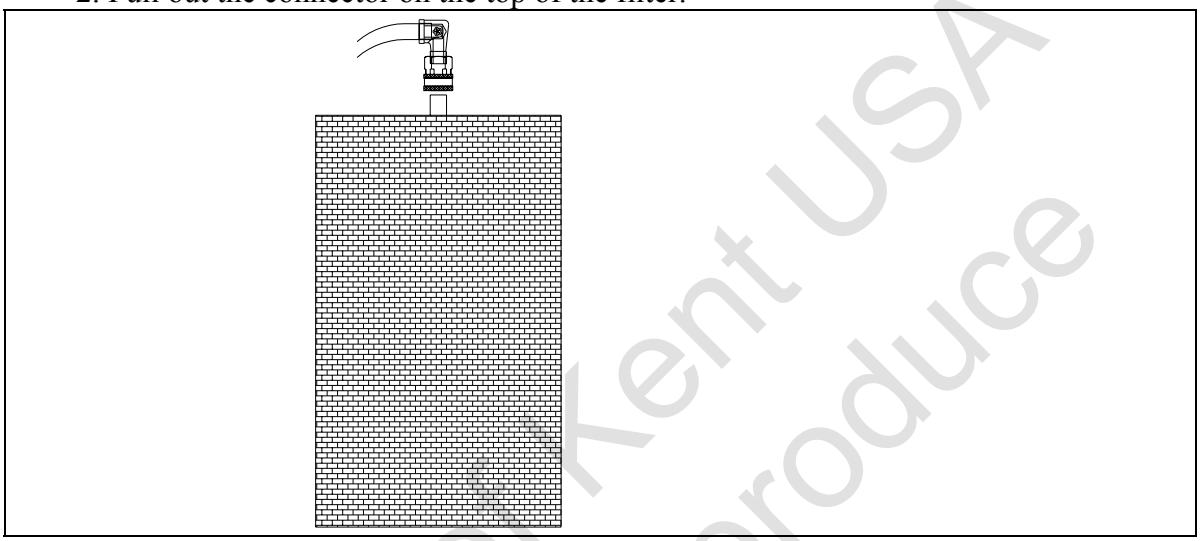

3. Replace a new filter.

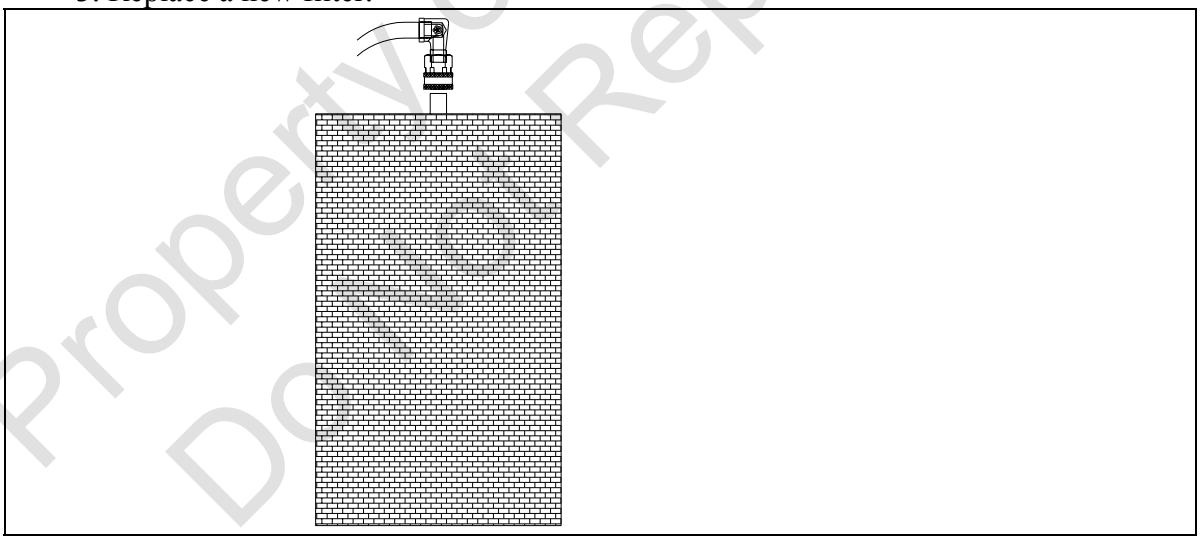

4. Connect the connector to the filter.

Property of Kent USA
Do Not Reproduce

Appendix（I）：Diversity types of WEDM water tank diagram

Submerge water tank front view

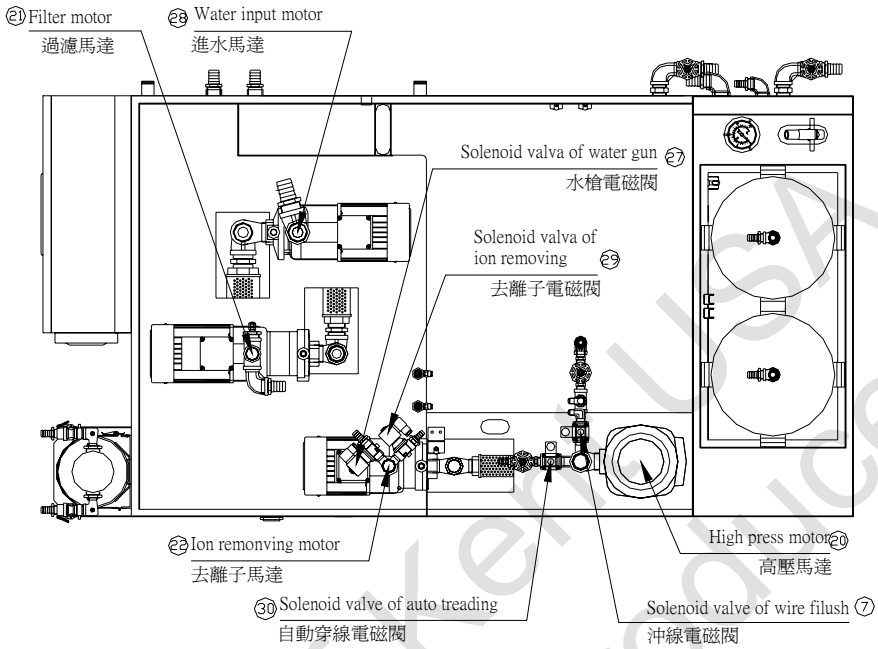

Submerge water tank side view

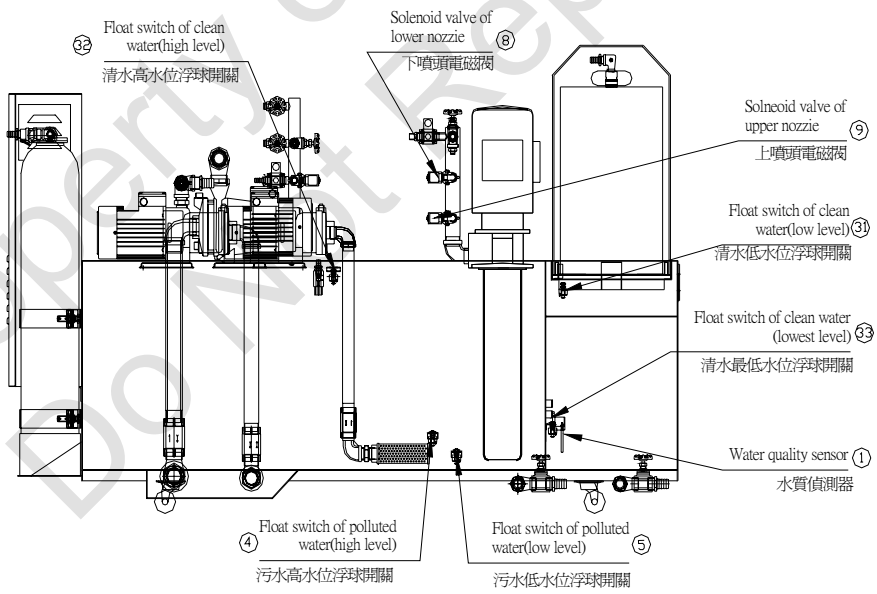

Property of Kent USA
Do Not Reproduce

Flush type water tank front view

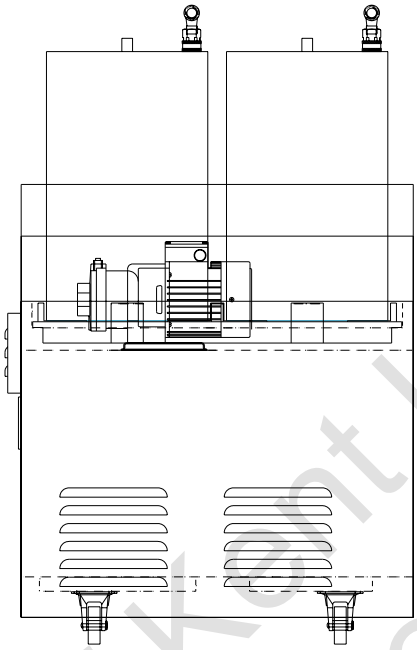

Flush type water tank side view

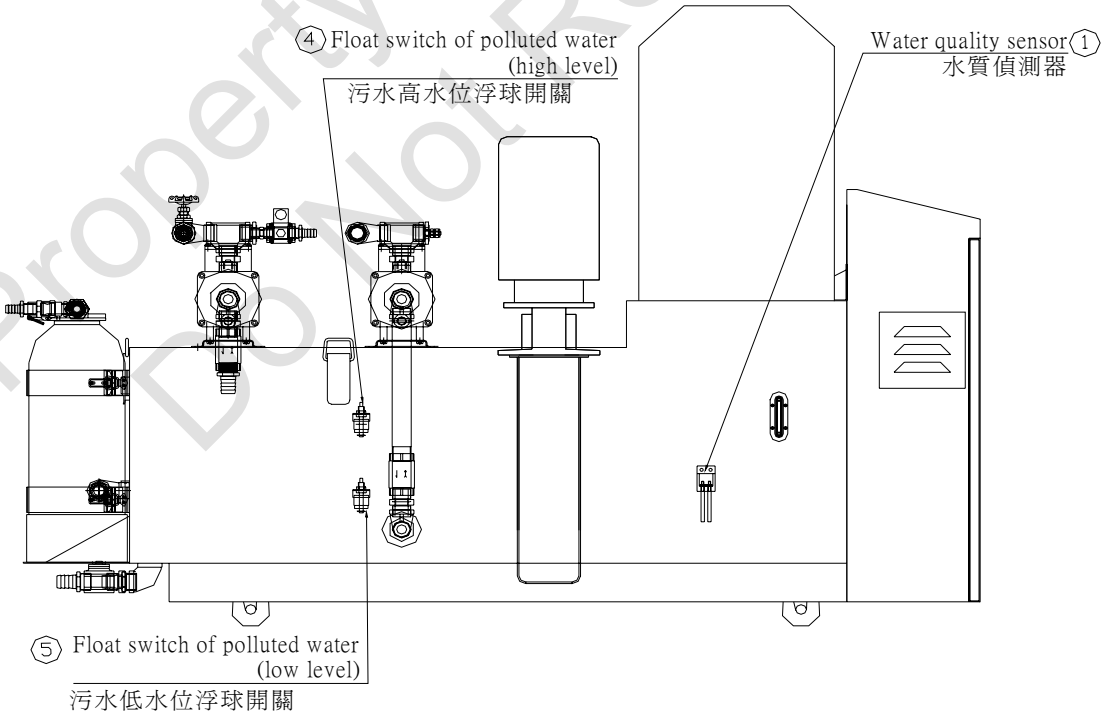

Property of Kent USA
Do Not Reproduce

（3） Check upper/lower Power Feed Contactor

【Check upper power feed contactor】

1. Remove the fastening screw on upper machine head.

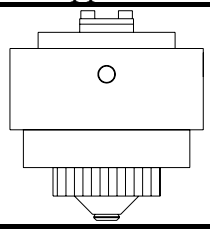

2. Insert a small hexagon wrench and push out the Power Feed Contactor. The L-Shaped small ruler can be used to remove the contactor.

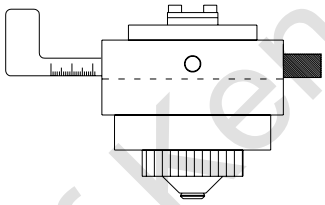

3. Check Power Feed Contactor：

Is there any wear mark or dirt on the surface of power contactor?

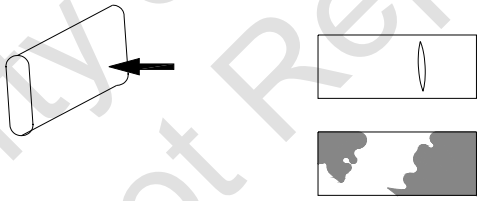

4. Clean the contactor with detergent：

Make sure there is no dirt on the surface of contactor.

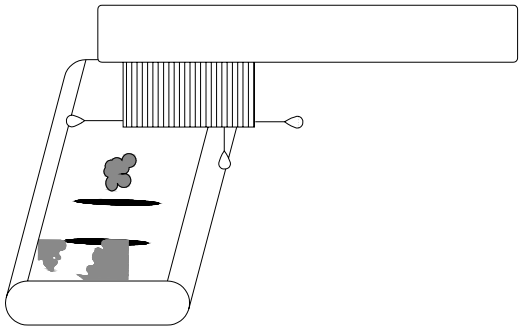

Property of Kent USA
Do Not Reproduce

5. Use the L- shape Ruler to install power contactor. The power contactor must be inserted completely and should not be exposed.

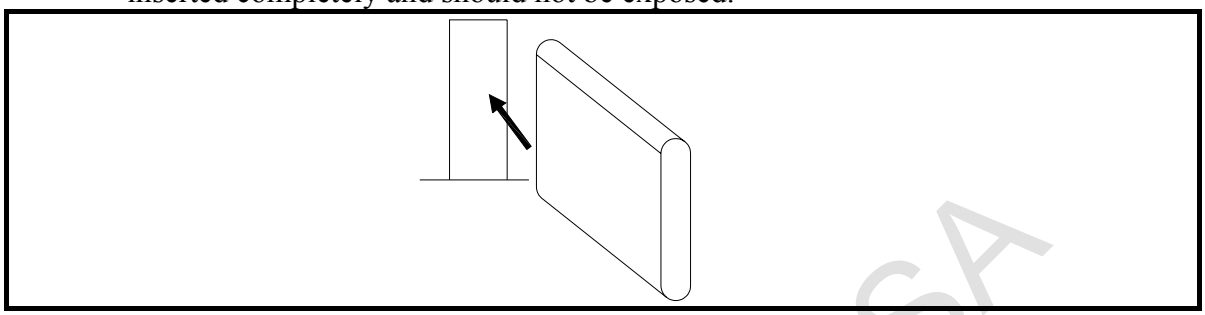

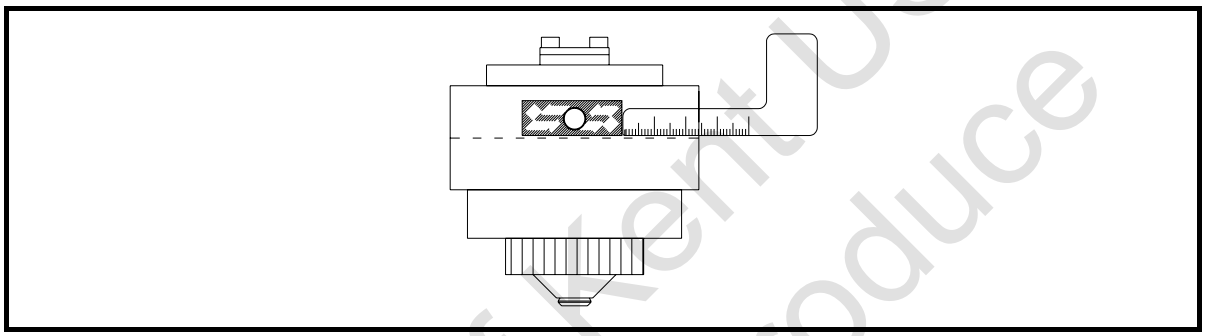

6. Tighen the fastening screw.

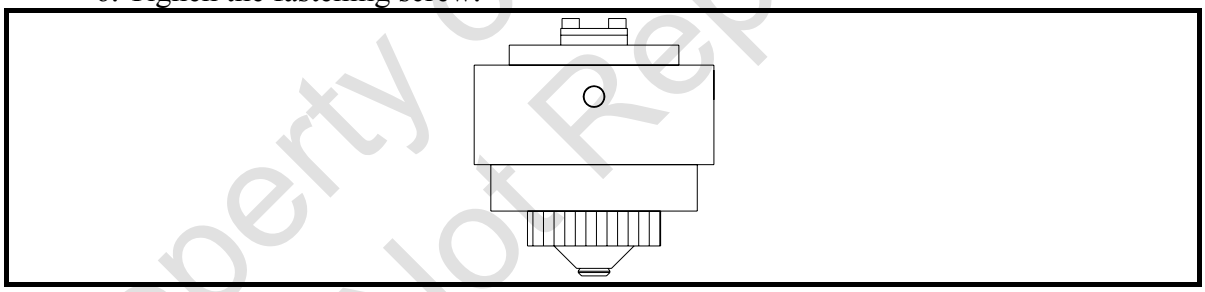

Property of Kent USA
Do Not Reproduce

【Check Lower Power Feed Contactor】

1. Remove the fastening screw on lower machine head.

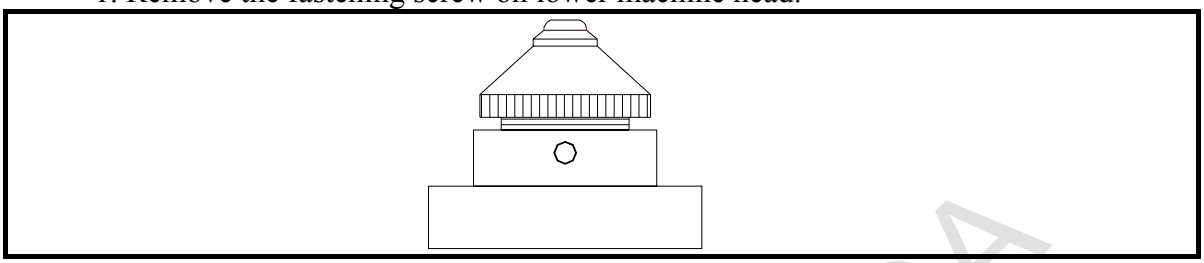

2. Insert a small hexagon wrench and push out the Power Feed Contactor. The L-Shaped small ruler can be used to remove the contactor too.

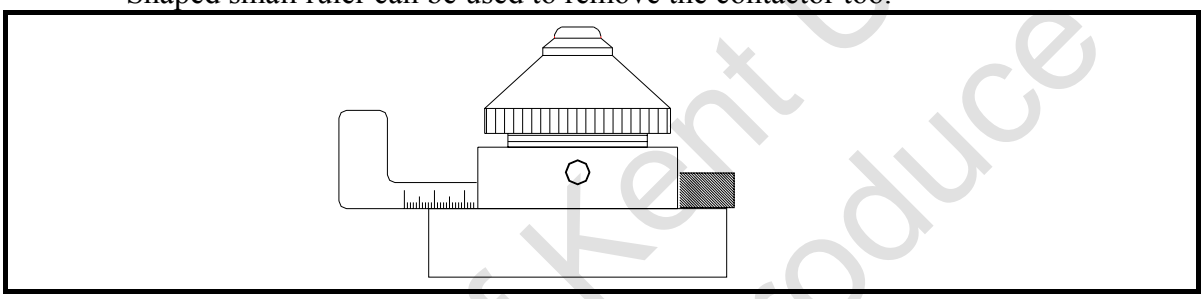

3. Check power Feed Contactor：

Is there any wear mark or dirt on the surface of power contactor?

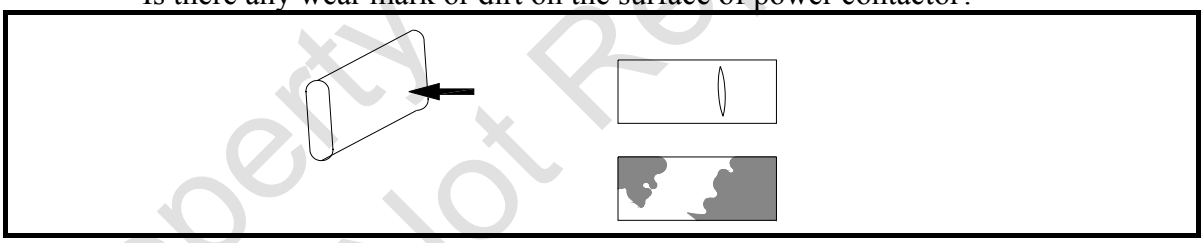

4. Clean the contactor with detergent：

Make sure there is no dirt on the surface of contactor.

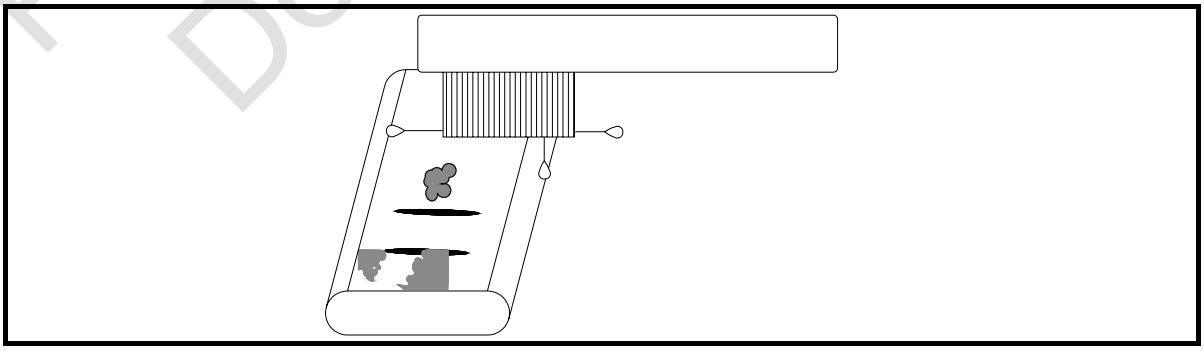

Property of Kent USA
Do Not Reproduce

5. Use the L- shape Ruler to install power contactor. The power contactor must be inserted completely and should not be exposed.

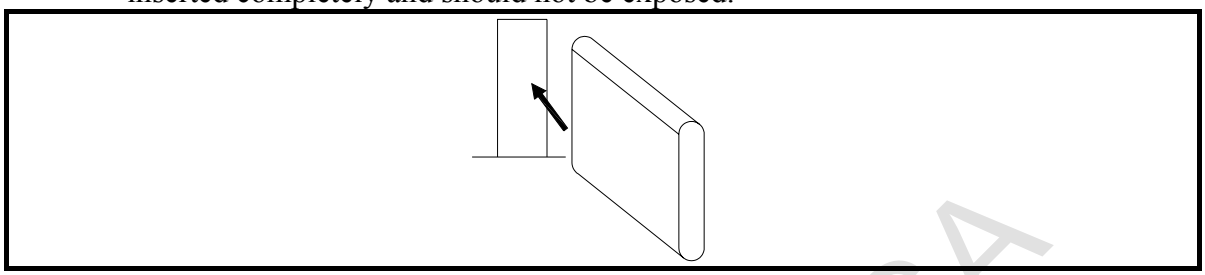

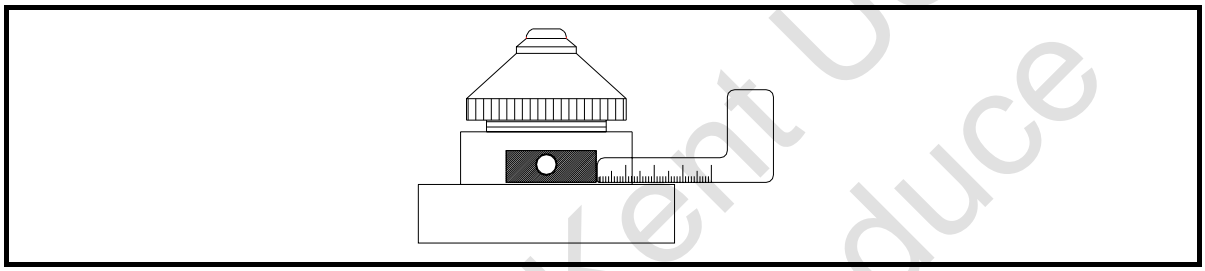

6. Tighen the fastening screw.

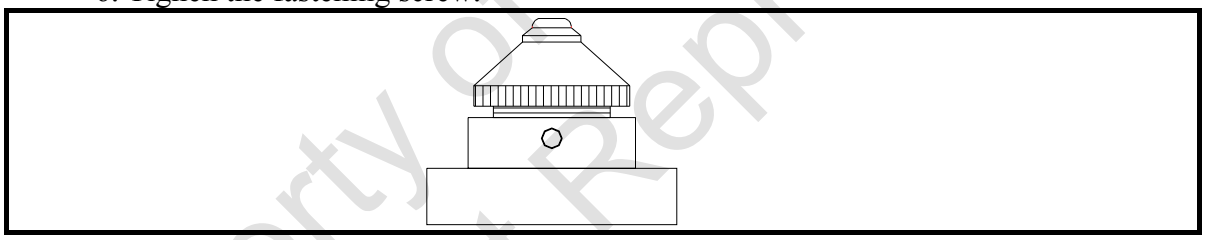

Property of Kent USA
Do Not Reproduce

（4）Verification of waste wire and barrel

Abandon the waste wire when it is half full in the barrel.

1. Power off the machine.
2. Remove the cap and then take out the barrel.

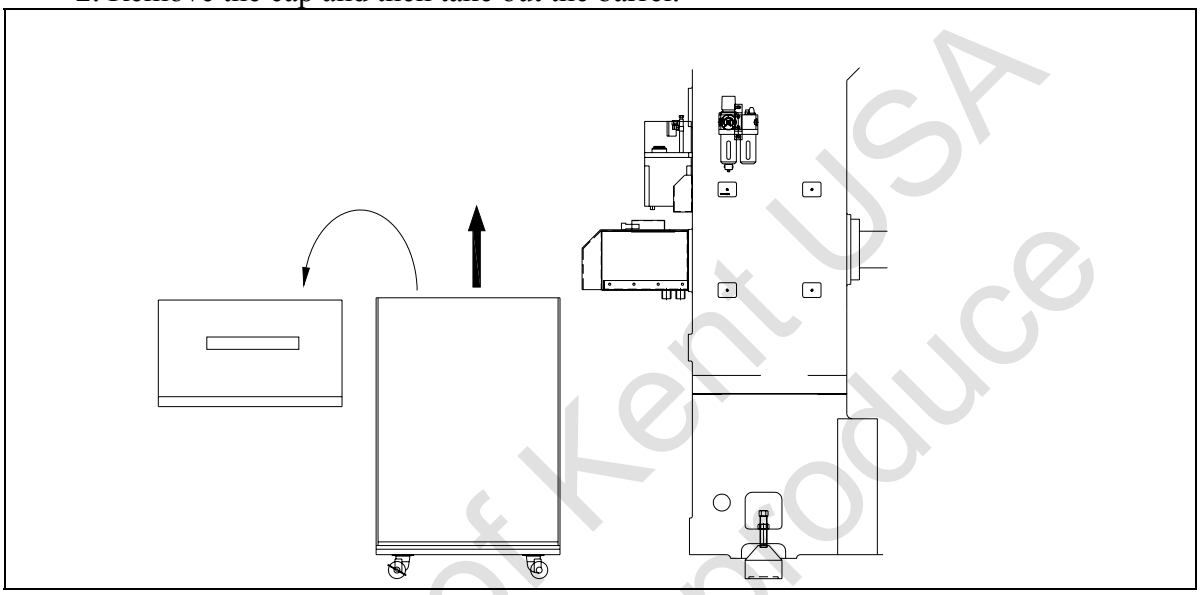

3. Close the cap and re-install the barrel.

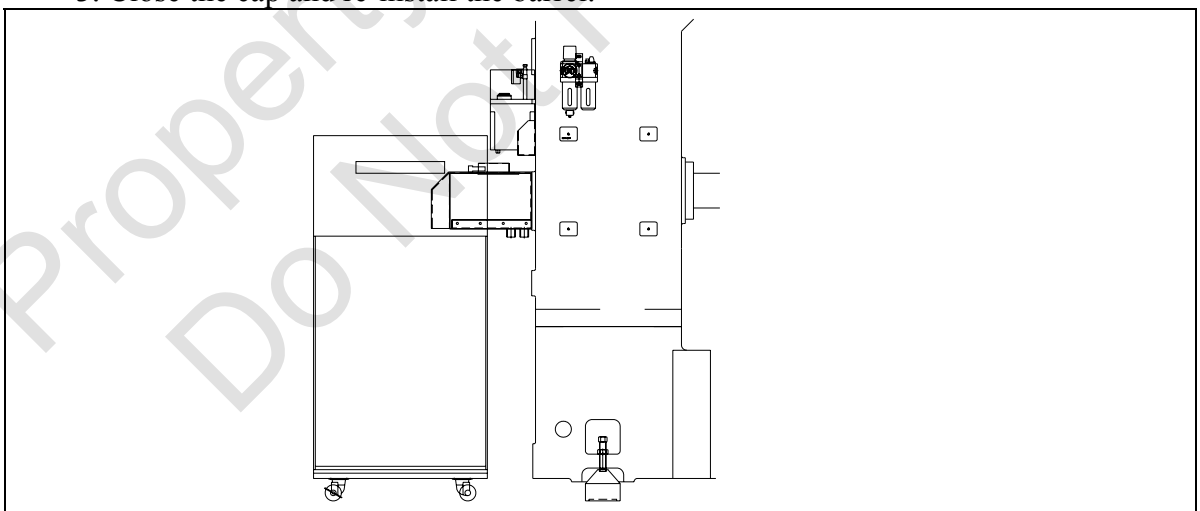

＊Note：Electric shock will occur if the machine isn't power off when checking the amount of waste wire.

Property of Kent USA
Do Not Reproduce

（5）Verification of processing liquid's water resistance

If the value of water resistance is between WAL and WAH or higher than WAH, that means the water quality is under control.

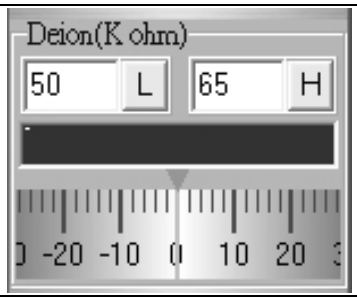

If the water resistance value is lower than WAL and the problem has not been solved after 60 minutes of deionized motor operating. ION- Exchange resin needs to be replaced at this point. The initial color of the ION-Exchanger resin is deep blue or golden yellow. The color will change into brown after processing liquid goes through ION- Exchange resin. ION- Exchange resin also has to be changed if the color doesn't change but the water resistance value cannot increase.

1. Turn off the machine.
2. Unplug the connecter that is connected to the rapid resin tank.
3. Loosen the twill.
4. Remove the resin tank.
5. Unscrew the resin tank lid with counter clockwise direction.
6. Pour in the new ION- Exchange resin.
7. Fasten the lid, reinstall the resin tank and then buckled the twill.
8. Connect the connector to the resin tank.

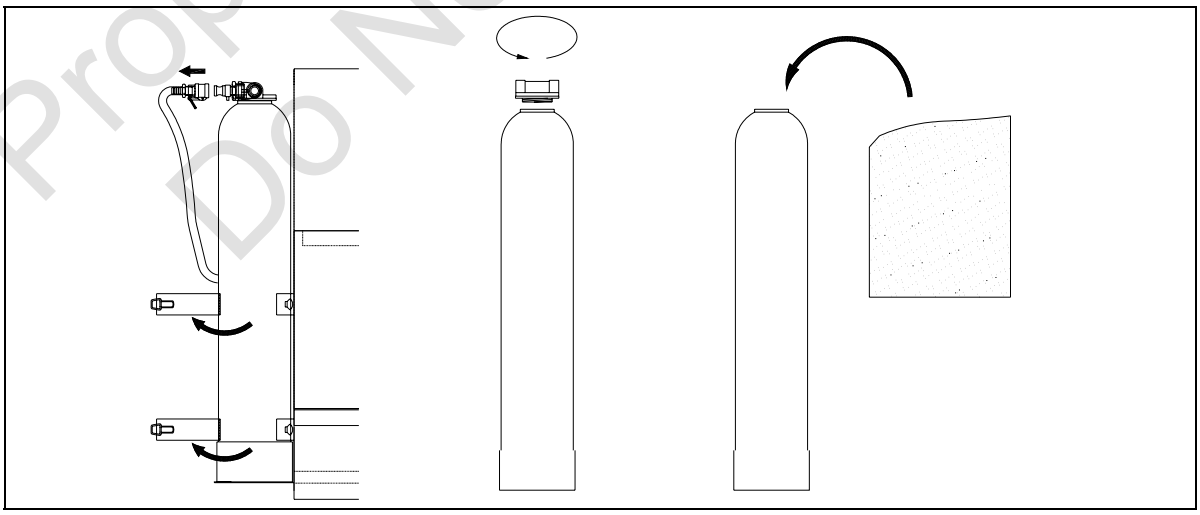

＊Reference：The table below represents the ION- Exchange Resin volume of different WEDM model.

Property of Kent USA
Do Not Reproduce

Model	Volume
Submerge type	10（L）
Flush type	5（L）

（6）Clean Up Machine Parts

After processing, clean all machine parts immediately.
It is easy and most effective to clean the parts when processing liquid is still wet.
Please remove the parts to clean it.

1. Use damp cloth to wipe the table, sub table and lower support arm.

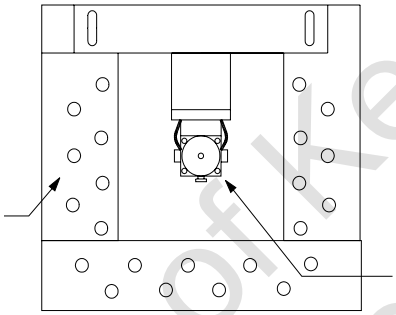

2. Under 【Process Monitoring】set WA=1, and then open the process liquid.
3. Use a toothbrush to scrub the lower machine head and get rid of dirt.
4. Remove the upper and lower flush nozzle and take out the diamond guides. Use toothbrush to clean the diamond guides.
5. Remove the Power cable terminals and use toothbrush to clean the contact surface.

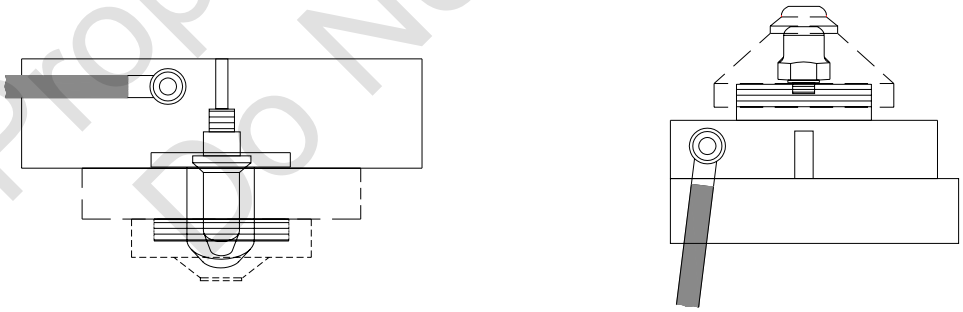

6. Re- install flush nozzle and power cable terminals.

Property of Kent USA
Do Not Reproduce

（7）Verification of Work Tank and Table

Make sure there aren't dents, cracks and sediment on the cross bridge fixture and table.

If there are cracks and dents on the work table and cross bridge fixture, a huge error will appear during the machining.

Use wet damp cloth to wipe out the sediment, otherwise use the rust remover（K-200）to get rid of it.

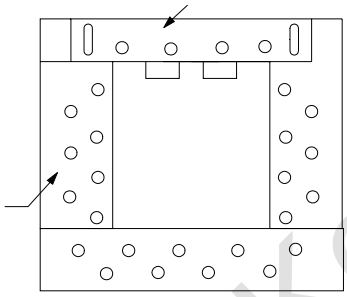

Check the waterproof oil seal plate in the working tank, and take out the waste and waste wire carefully in order to prevent oil seal plate and lower arm get scratched. When cleaning the inter side of the oil seal plate, be caution to avoid the oil seal plate getting scratched or leakage because issue will occur.

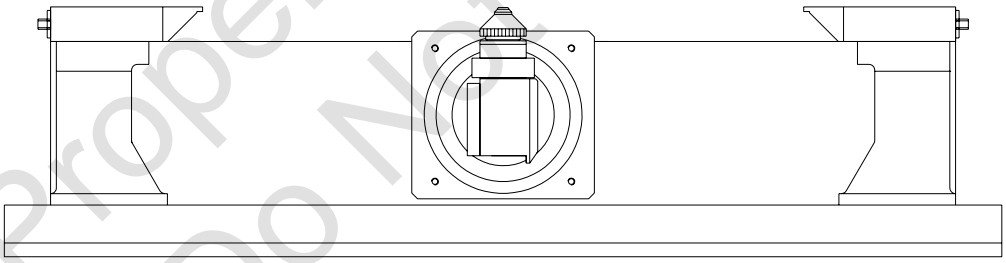

Property of Kent USA
Do Not Reproduce

13 AWT Description

The AWT system created by KENT USA EDM MFG has state of the art design, with Intelligent Auto Threading Software. Following is the description of KENT USA WEDM AWT system.

13.1 AWT/ Wire Cutting Function description:

Hot Key→ Under Tool, there are 「AWT」、「Cut Wire」、「Water or Air」etc. In addition, some function can also be found on the controller box.

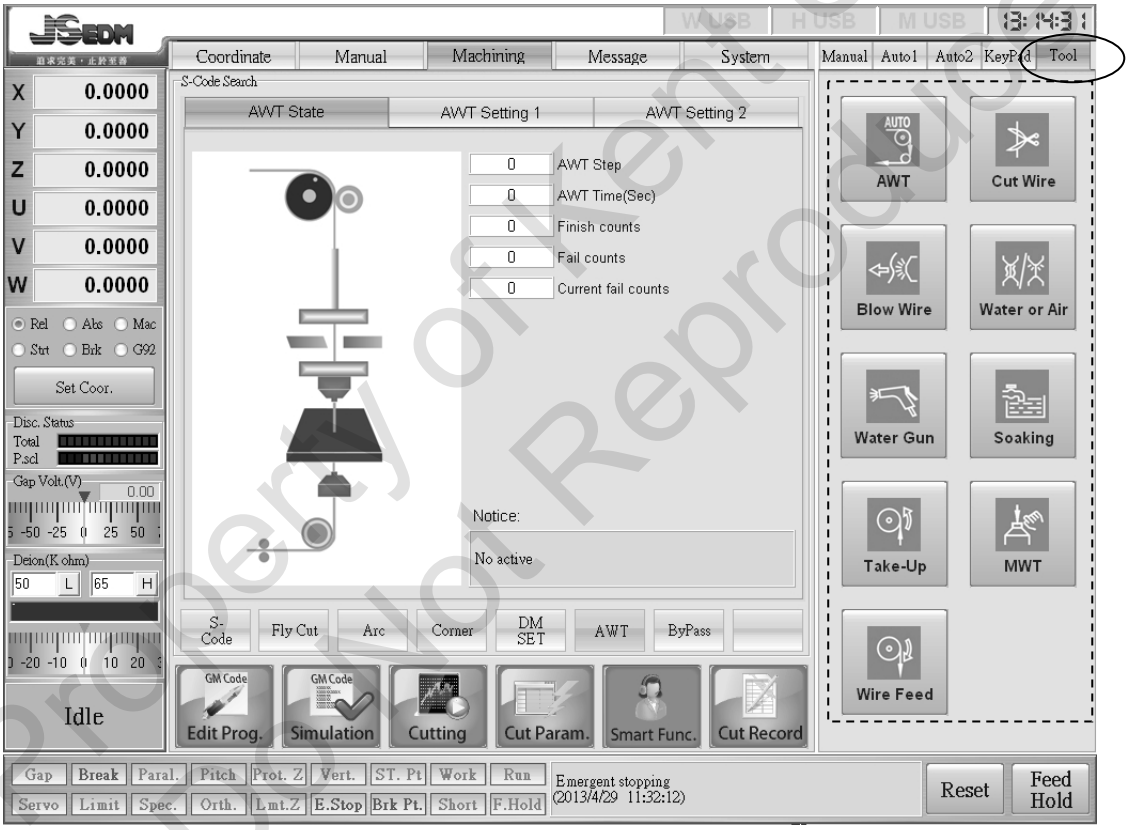

Property of Kent USA
Do Not Reproduce

13.2 AWT/ Wire Cutting Function description:

Under【Machining】→《Smart Func.》→『AWT』, the figure below shows the setting of AWT.

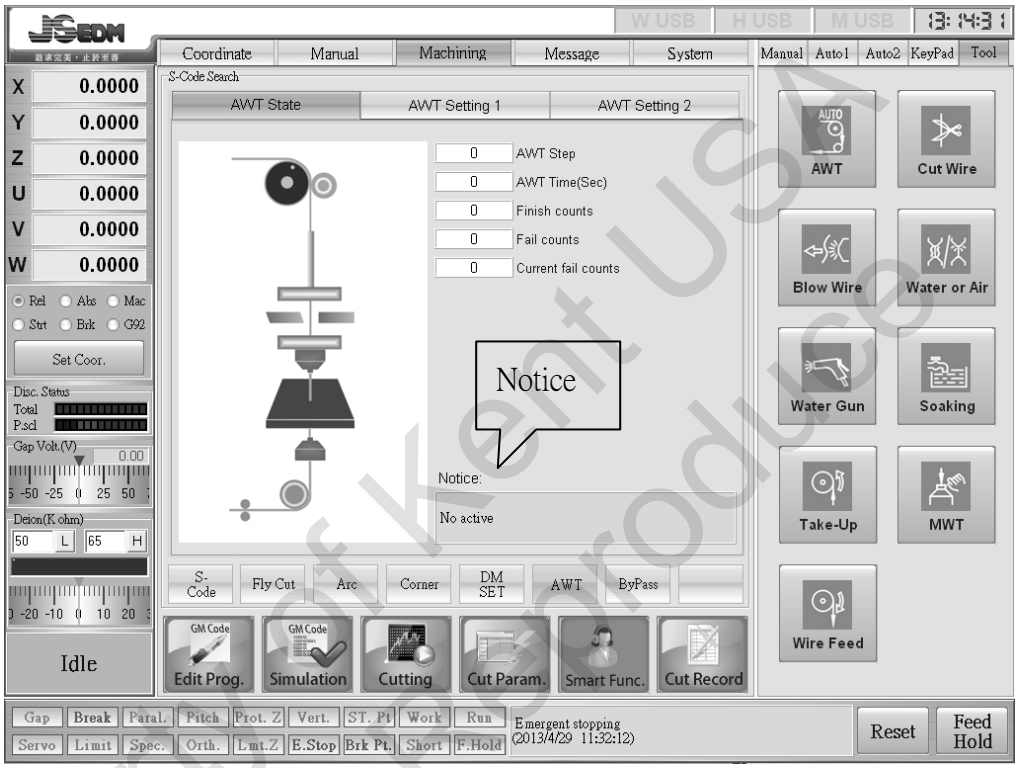

13.2.1 AWT State：

（1）AWT Step：The numbers in this block represent the step which the threading process is going through

（2）AWT Time(Sec)：The duration between starts and ends AWT.

（3）Finish counts：The sum of threading successfully.

（4）Current fail counts：The sum of fail threading.

（5）Fail counts：The sum of fail threading on G92.

Property of Kent USA
Do Not Reproduce

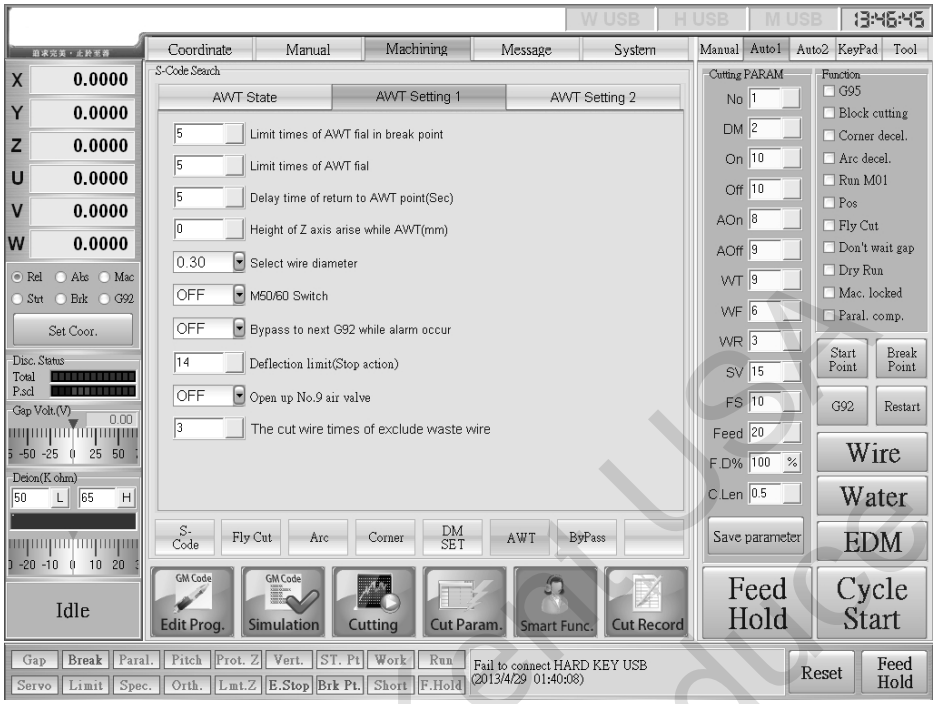

13.2.2 AWT Setting1

（1）Limit times of AWT fail in break point：When AWT fail is over the limit, the machine will move to the starting point and thread automatically. After done with threading, the machine will go back to break point by itself.

（2）Limit times of AWT fail：When the sum of AWT fail in both starting and breaking point are over the limit, the machine will stop cutting or move to the next G92.

（3）Delay time of returning to AWT point(Sec) ：Two situation might happened while this function is set.

i. When the delay time of threading on the breaking point is over the limit, the machine will thread at the starting point.

ii. When the delay time of threading on the breaking point is over the limit, The machine will thread at the next G92.

（4）Height of Z axis arise while AWT(mm) ：Every time before operating threading(M60), Z axis has to raise to the height limit.

（5）Select wire diameter：The threading speed and wire length depend on the feeding path

（6）M50/60 Switch：This function is used to remove the metal piece from the workpiece after done with machining. When the path between M50 and M60 is done with machining, set M50/M60 to ON to switch the function between M50 and M60.

Property of Kent USA
Do Not Reproduce

（7）Move to next G92 while an error message appears in BYPASS：When the re-threading process reaches the set limit, an error message will appear. If this function is ON, the machine will move and thread at the next G92. And if this function is OFF, the machine will stop when fail threading.

（8）Limit times of deflection：When the machine reaches its deflection limit, the machine will record it as one threading fail.

（9）Open up No.9 air valve：During preheat, the wire will be tighten. Therefore, when cutting the wire, there will rounding force in the wire. The thinner the wire, the stronger rounding force it will have. This means when the thickness of the wire is below 0.15m No.9 valve needs to be opened. However, please close No.9 valve when preheating thicker wire in order to prevent affecting the wire straightness.

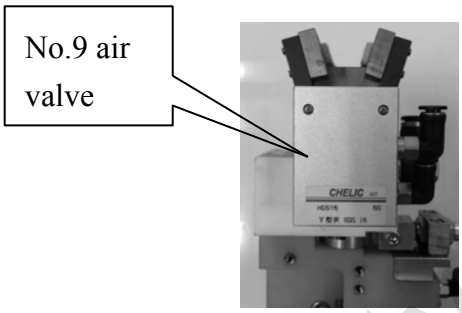

（10）Times of cutting waste wire ：If the wire is break inside the workpiece, this function can be set to make the threading process more successful.

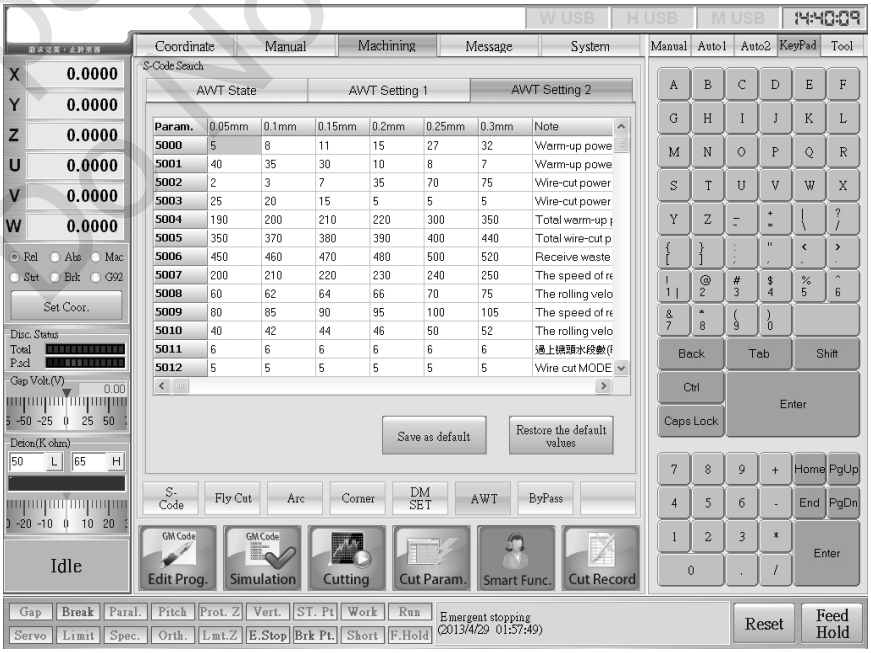

Property of Kent USA
Do Not Reproduce

✐Hint

- Parameter：
  Please set the suitable parameter for machining
  If the wring value has been input, it may cause the machine disable to work operate irregularly. Parameter is really important for machining.
- Password is needed for edit parameter. The password is included in the disk.

13.2.3 AWT Setting2：Passcode is needed

（1）Warm-up power ON Time：The straightness of the wire will be affected if the wire isn't be used for a long time. Heating the wire can resume it to the original straightness. However the wire will deform or break if it heats too long. The heating time cannot be too short either because the time won't be enough for the wire to get straight.

（2）Warm-up power OFF Time：This is a function where the warm up time can be adjust. When decreases the warm up power OFF time the heating temperature will raise, whereas the temperature will decrease when increasing the warm up power OFF time.

（3）Wire-cut power ON Time：If the parameter is set too big, the wire cut power will cause the wire tip becomes not sharp. Whereas the wire tip will be break because of pulling or cannot be cut if the power is set too low.

（4）Wire-cut power OFF Time：This is a function where the wire cut time can be adjust.。. When decreases the wire cut power OFF time the heating temperature will raise, whereas the temperature will decrease when increasing the wire cut power OFF time.

Property of Kent USA
Do Not Reproduce

Best Condition

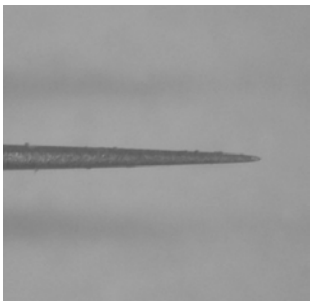

Excess of Power

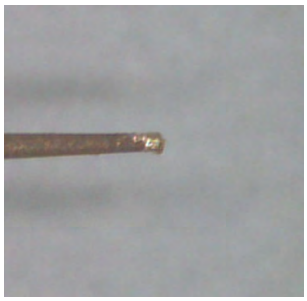

Lack of power

（5）Total warm-up power time：Total time to preheat. Warm up time cannot be too long or too short, it might cause the deformation and affect the straightness of the wire.

（6）Total wire-cut power time：Total time to cut wire. The values that used as the parameter depends on wire cut ON, OFF time, wire cut tension etc. Do not change this setting if you are not technician.

（7）Receive waste wire time：While done with wire cut or wire break, turn off the motor to stop the receive waster wire time.

（8）The speed of receive waste wire(Servo Motor)：Turn on and adjust the speed of the motor after finish cutting or breaking the wire.

（9）The rolling velocity of determine the wire is break or not(Servo Motor)：To confirm the threading process is successful or not, the rolling wheel(It is used to receive the waste wire.) will start rolling. If the tension wheel and the motor operate at the same time, that mean the threading process is done.

（10）The speed of receive waste wire(DC Motor)： same with（8）, but the parameter can only suitable for AC motor.

（11）The rolling velocity of determine the wire is break or not(DC Motor)：same with（9）, but the parameter is only suitable for AC motor.

（12）Water flow rate of the upper machine head：After wire cut, semiautomatic water flow rate is used to help the wire pass through the upper diamond guide. When the wire is sent to the diamond guide, the water flow rate will change to automatic which is based on the set parameter.

（13）Wire cut MODE：（Not available）

Property of Kent USA
Do Not Reproduce

（14） Warm-up pulling force：In order to reach the best condition of straightness, wire tension plays an important role at this point. The best condition cannot be achieved if the wire tension is too big or too small.

（15）Wire-cut pulling force：A temperate pulling force is needed during wire cut, the force cannot be too big or too small.

（16） Distance 1 speed (mm/min)：The feeding speed from enable AWT to wire cut point.

（17）Distance 2 speed (mm/min)：The feeding speed from wire cut point to the flush water cap of upper machine head.

（18） Distance 3 speed (mm/min)：The feeding speed from the flush water cap of upper machine head to the work piece.

（19） Distance 4 speed (mm/min)：The feeding speed from workpiece to flush water wheel.

（20）Distance 5 speed (mm/min)：The feeding speed from flush water wheel to wire receiving wire.

（21） Distance 6 speed (mm/min)：The feeding speed from the wire receiving wheel to wire recycle bin.

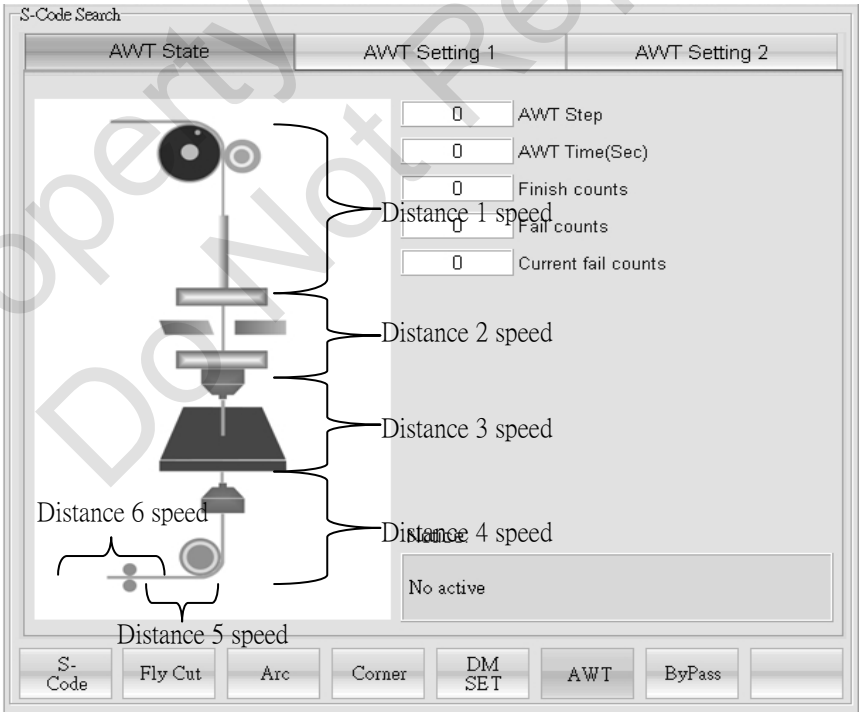

Property of Kent USA
Do Not Reproduce

（22）**The speed of wire backward (mm/min)**：This function is under Tool

（23）**The speed of wire forward (mm/min)**：This function is under Tool

（24）**Deflection retrogression speed**：There are 6 detection points(16)~(21) in

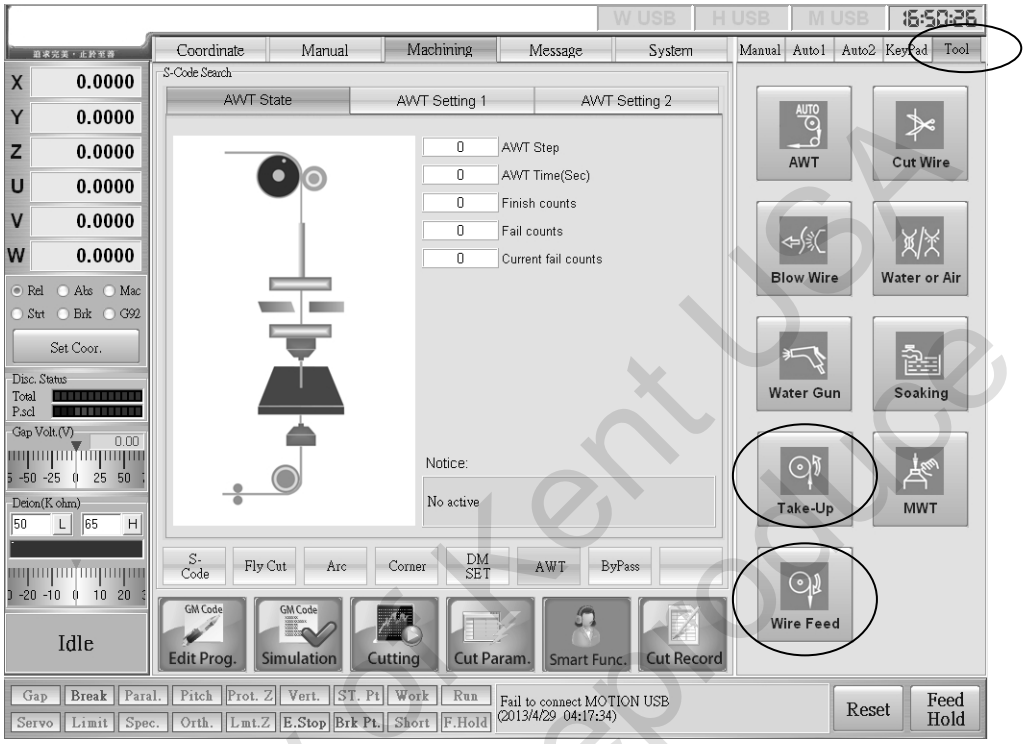

the threading system. Since the threading speed in each part of section is different, the detected speed will also be different. If the wire is not able to thread due to the wire curvature, the tension wheel will roll reversely. Besides, if the wire is too thin and the wire is moving backward too fast, the wire that locates between wire feed wheel and tension wheel will come off. This will cause the threading process to fail.

（25）**The waste wire eliminate On Time set**：While machining, if the power of On Time is relatively big, the surface of the wire will be rough which will increase the possible of threading to fail. If the On Time parameter is larger than the set limit, the waste wire eliminate On Time set will start to operate.

（26）Water pressure default value in Manual threading：The parameter in this section stands for the intensity of water pressure in semiautomatic threading. Please input the suitable parameter when using the wire with different thickness, otherwise the wire might stock at the receiving wire section.

Property of Kent USA
Do Not Reproduce

（27）Wire tension default value in Manual threading：When the EDM system is ON, the tension wheel will provide a tension to stop wire feeding (None AWT system only). However, it might cause the wire comes off from the path.

13.3 ByPass：

Under【Machining】→《Smart Function》→『ByPass』，the figures provides a screen shot and shows the machining process.

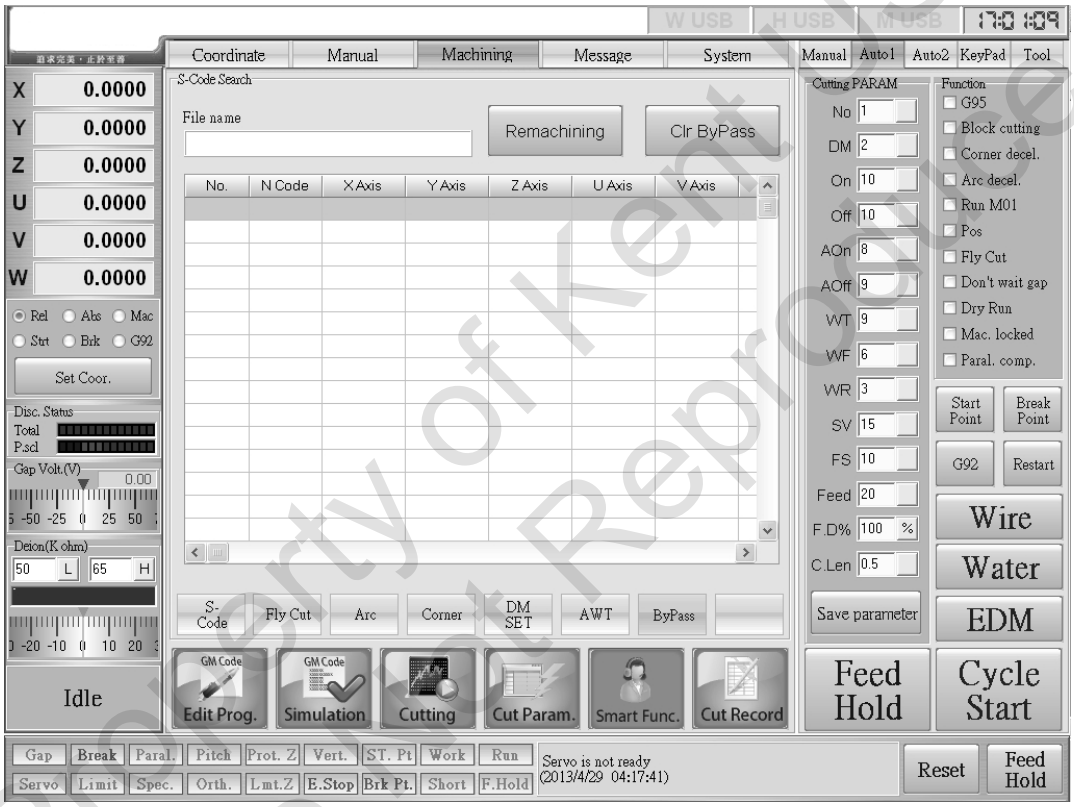

Property of Kent USA
Do Not Reproduce

ByPass process

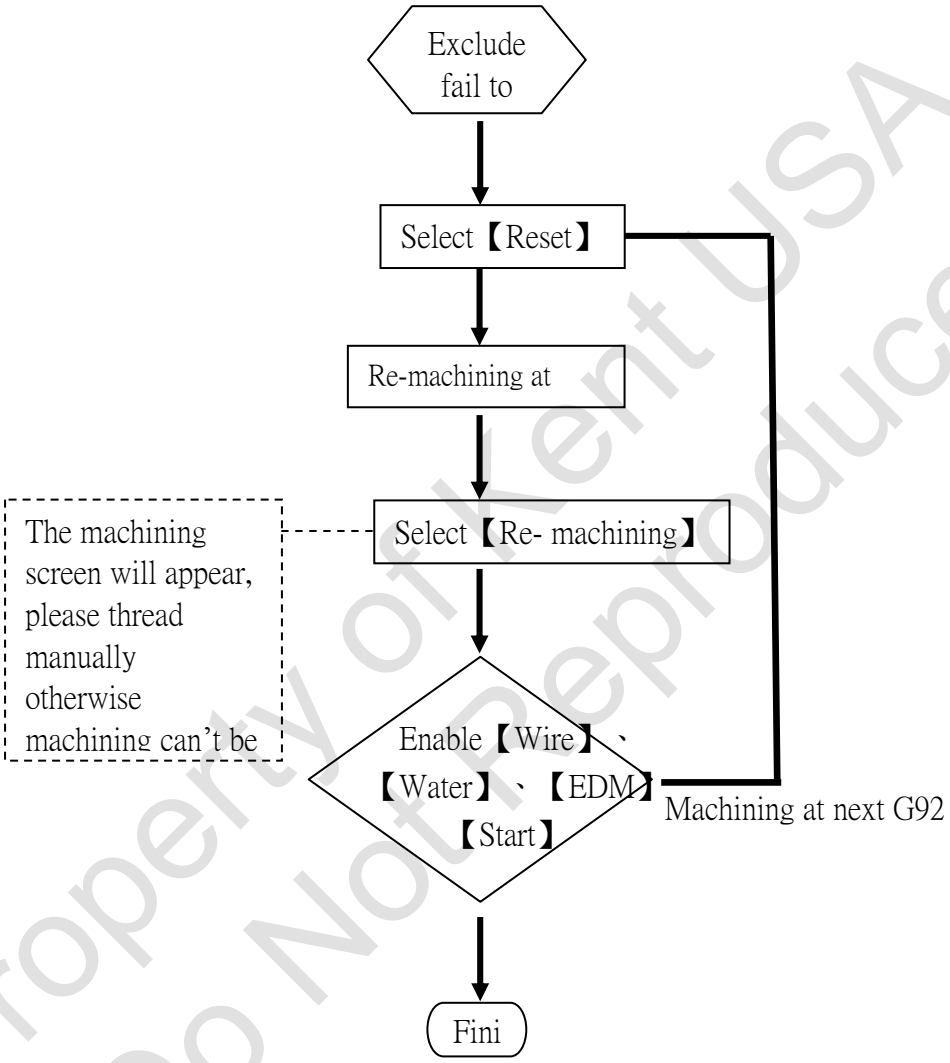

Property of Kent USA
Do Not Reproduce

Purpose：

When doing machining with multiple G92, if one of the G92 points reaches thread failure limit, the machine will move to the next G92 and start machining. This function is created to save more time and be more convenient for the users when operating machining.

Machining：

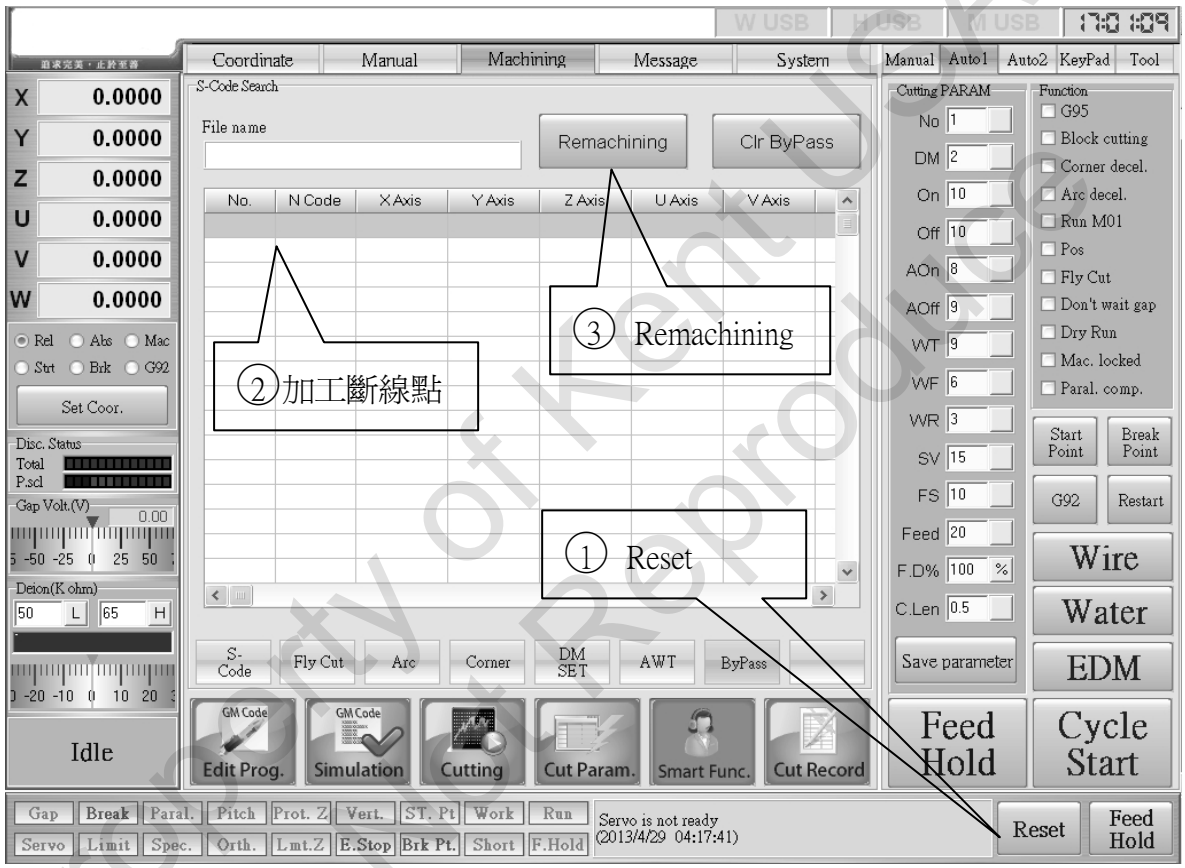

1. Based on the figure above, Bypass records the G92 points that are failed to thread. When the machining is done with its mission, the user can find the G92 points that are failed to thread based on Bypass and do the machining. The record will be deleted automatically whenever the G92 point is done with machining.

2. Before using Bypass, please check and remove the wastes in the break point.

3. Please Reset the machining program and select machining to break point then click Remachining . The machiing will operate dry_run and move to the specified break point. After the machine reaches the break point, it will stay hold. Please thread manually and re-machining at this point.

Property of Kent USA
Do Not Reproduce

13.4 Machining Program

Purpose：To make the AWT program more automation, M40/M50M60 need to include in NC program.

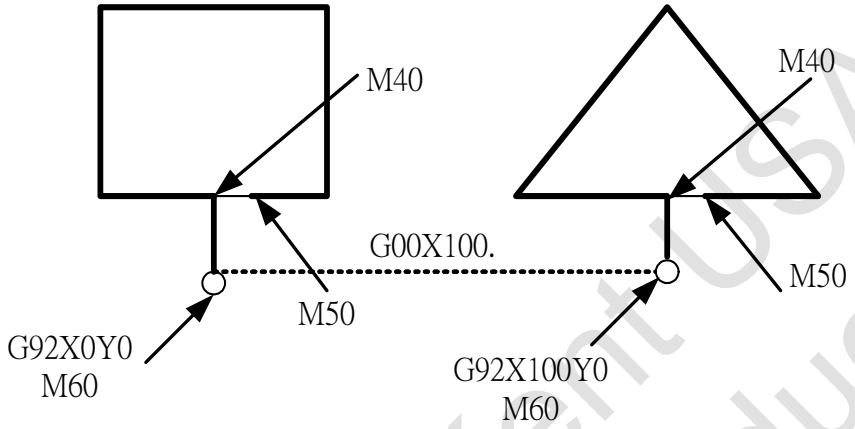

Format：Based on the figure above, M60 will be added behind every G92. When the metal part is done with machining, a small distance is left to avoid the metal part being re-discharge and get damage. M50 is an instruction to cut through this distance and remove the metal part from the work piece. Last, M40 will be used to cut the wire then the machine will move to the next G92 based on G00.

Procedure：

1. When M50/M60=0, if the program reads M60, the machine will start threading. During machining, if the program reaches M50, the machine will operate dry run and move to the next G92.
2. After done with machining, but use Bypass to check and finish the unfinished work.
3. When the machine is done with machining, please move the machine to the start point and set M50/M60=1 to remove the wastes from the workpiece.
4. At this point when program reaches M60, wire cut will be operated. Next, the machine will Dry Run and move to M50 which is stands for threading. Press CYCLE START to finish up cutting, the wire will be cut when it meets M40. When the cutting process is done, G00 will be operated. The machine will move to the next G92 and repeat the same machining process.

Property of Kent USA
Do Not Reproduce

AWT description

(1). Problem with the threading process after threading the wire into the guide with a depth of 1 ~ 2 mm.

A : 1. Please check the wire if its rust or not.(The oxide particle that is on the wire will result the wire having a rough surface.)
2. Check the copper wire quality. (Highly recommand not to use the wire that has been produced over 6 months.)
3. Please check the inner suface of upper guide and make sure its clean.
4. Please clean the upper guide and make sure there is no scratch or wire inside the guide.
5. While cutting the wire, if the power connect part（JU120AN） moves speed too fast, it will cause the cooper wire being compressed. The compressed wire will not able to go through the lower guide. Please adjust the airflow from the cylinder.
6. Discharging won't happen when cutting the wire. If there is, please check the power connect part (JU120AN) and the (JU53CN).

(2). After pressing the AUTO key (Auto threading wire key) the braking wheel (WD48AN) will rotate in clockwise. Please check the part list (JY025-A)

Checking process:

A : 1. Please check JU110BN and make sure there are no chips.
2. Please check the lower guide（WA52AN）and make sure there are no chips.
3. When the cooper wire threads into the low arm , please check machine coordinate from the Z-axis.

(3). When operation the wire treading function, the wire is able to thread through wire sensor (JU110BN), but not able to reach the cut wire point (JU126AN). Please check the JY025-A and JY026-A

Checking process:

A : 1. Please check the conduit (JU99) and make sure there is no wire inside. (The different series has different part numbers: WA430A、WA530A type is JU99AN、WA640A type is AU07AN)
2. Make sure JU74B and JU118B are clean.

(4). The copper wire is not fully attached on the braking wheel (WD48AN). Please check the part list (JY025-A)

Property of Kent USA
Do Not Reproduce

Checking process:
A : 1. Please check the braking wheel (WD48AN).
2. Please check the creasing wheel (JU16BN) and stable the wheel by adjusting the screw

(5). Could not thread through the upper guide. Please check the part list (JY028-A)

Check process:
A : 1. Please check the power connects and upper guide (WA76AN), make sure there is no scratch or wire inside the guide.
2. Please check the upper guide make sure there is no chip inside.
3. When ATW cut the cooper wire, if the following phenmenon happened such as discharge, wire overheat, or wire apex becomes obtuse, please check the attachment

(6). Wire will slip off after being cut. Please check the JY026-A

Check process:
A : 1. Please check the cylinder (JU01).
2. Make sure (JU91) and (JU41) are fixed .
3. Make sure (JU91B) and (JU131A) are not damaged.
4. Please remove the waste wire.

(7). Unable to break the wire. Please check JY025-A

Check process:
A : 1. Please check the cylinder (JU01) is working fine.
2. Make sure JU53C and JU120A are not damaged.
3. The temperature of the ATW equipment too low and the wire tension too small.
4. Please check JU121 and make sure the cables are connected properly.

(8). The braking wheel won't stop when the wire reaches the wire holder (JU91B). Please check the JY025-A

Check process:
A : 1.Make sure the cylinder (JU01) tis working fine.
2. Make sure there is no wear mark on JU107.
3. Make sure the spring is not elastic fatigue.
4. Make sure the cable on JU107 is connected properly.
5. Make sure JU16B is clean and not being insulated.

Property of Kent USA
Do Not Reproduce

(9).The flushing water from the upper guide is scattering. Please check the JY028-A

Check process:
A : 1. Control the amount of water being released by adjusting valve (AJ29D).
2. The upper diamond guide (WA103) is damaged.
3. The upper diamond guide (WA103) and upper guide are too close to each other.

(10). Copper wire isn't able to thread through the lower guide.

Check process:
A : 1. Make sure there is no chip in the lower guide.
2. If there is scratch or wire stock inside the lower guide, this means the lower guide is damaged.

(11). The copper wire are not able to reach the wire recycle system while threading. Please check the JY007-A and AY050-A

Check process:
A : 1. Please check the Z-Axis machine coordinates because it will impact the feeding length on W-Axis.
2. Make sure the power connect feed (WA76DN) is not damaged.
3. Please check if there is water come out from the part (WA51EN).
4. Make sure no chips are in WA51EN.
5. Make sure the flushing wheel (WA04CN) is working fine, otherwise please change the bearings (WA02).
6. Make sure no chips are in the space from water flushing wheel (WA04CN), WAT43B to WD70BN and WD71AN.

(12). The copper wire has difficulty passing through the wire break point.

Checking process:
A : 1. The curvation of the wire can be an issue.
2. After cutting the wire, the cut point not well.
3. Verticality issue of the upper machine head
4. The speed of the wire passing through the workpiece is too fast.

Property of Kent USA
Do Not Reproduce

(13). The cooper wire have deflection condition to big.

Check process:

A: 1. Please check the Attachment 1.

Environment:

The copper wire needs to be produced within 6 months, the radian can not over 20 mm and with a length of 300 mm. Besides, the room temperature has to control with in 25℃ ±3℃.

Do not randomly change the specification and brand of the wire. Because the quality and material of the wire produced by different companies are diffenert, during auto threading the wire might fail to thread.

Maintain and clean regularly.

(Naturly Droop)

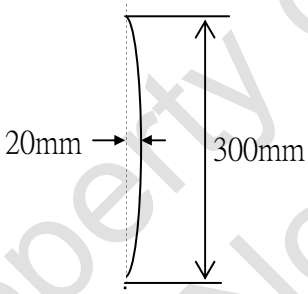

(After Burning)

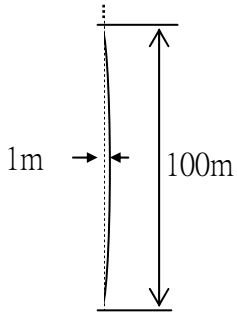

(14) Copper Wire curves irregularly

A: While heating, the color of the wire will turn red and the diameter srink due to the high temperature. Please go to 【Auto PARM】→ 《Auto Feed》 → （Auto Feed Setting 2）to increase the parameter of the heating time based on the wire condition.

(15) Copper Wire isn't straight

A: While heating, the curvature of the wire is too big is due to the low heating temperature. Please go to 【Auto PARM】→ 《Auto Feed》 → （Auto Feed Setting 2）to decrease the parameter of the heating time based on the wire condition.

Property of Kent USA
Do Not Reproduce

(16) The tip of the wire becomes round after being cut.

A: Cutting wire function is turining on too long. Please go to【Auto PARM】→ 《Auto Feed》→ （Auto Feed Setting 2）to decrease the parameter of the cuttiing time based on the wire condition.

(17) A cross section is formed on the tip of the wire after being cut.

A: Please go to【Auto PARM】→《Auto Feed》→（Auto Feed Setting 2）to decrease the parameter of the cuttiing time based on the wire condition.

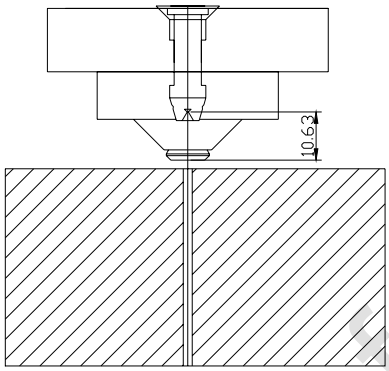

1. The diameter of the hole of diamond guide is 0.255mm. Copper Wire cannot thread through if its curve irregularly.
2. The distance between the diamond guide and the workpiece is 10~11mm. Please make sure the copper wire is straight enough to thread throught the workpiec

Property of Kent USA
Do Not Reproduce

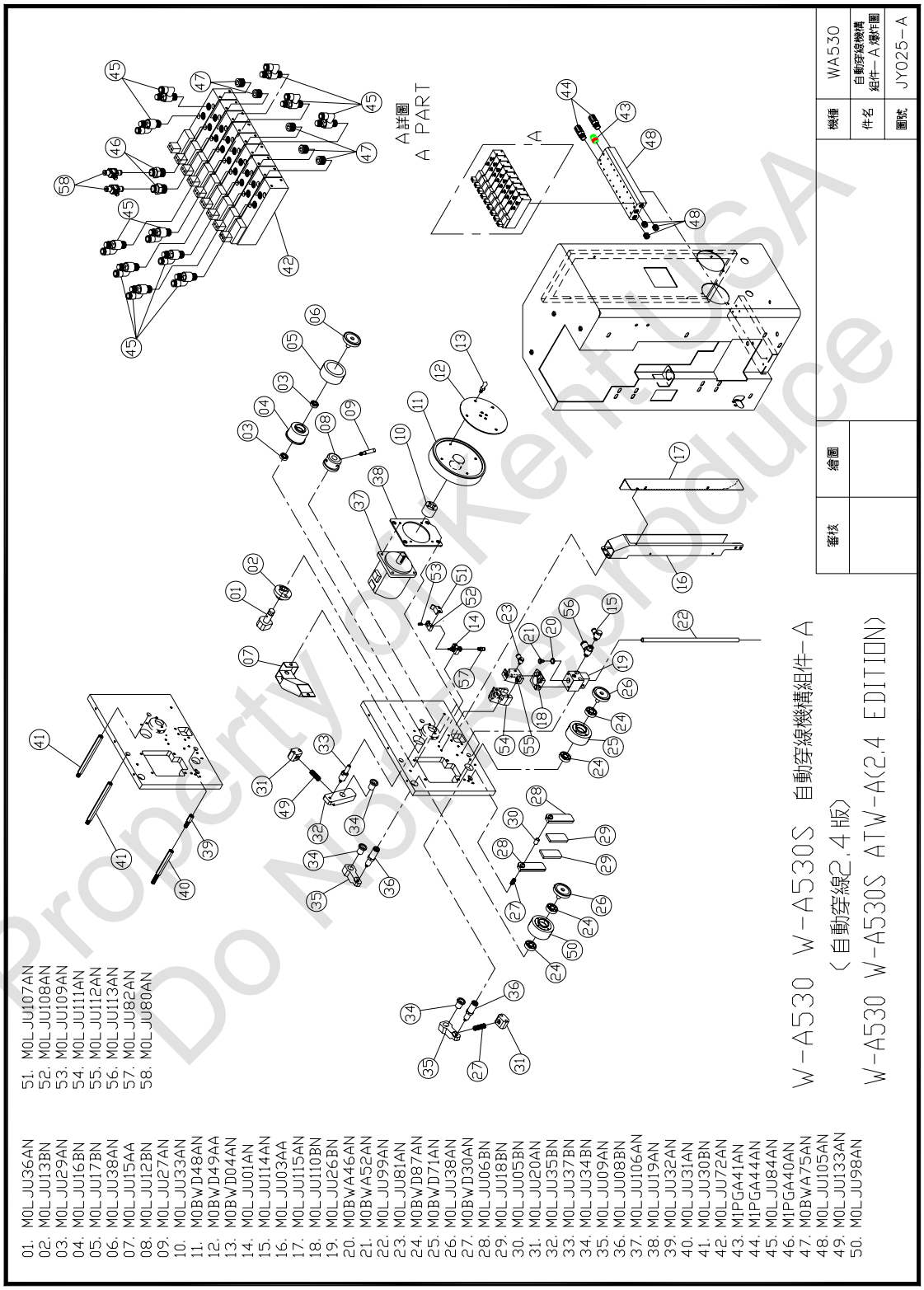

Property of Kent USA
Do Not Reproduce

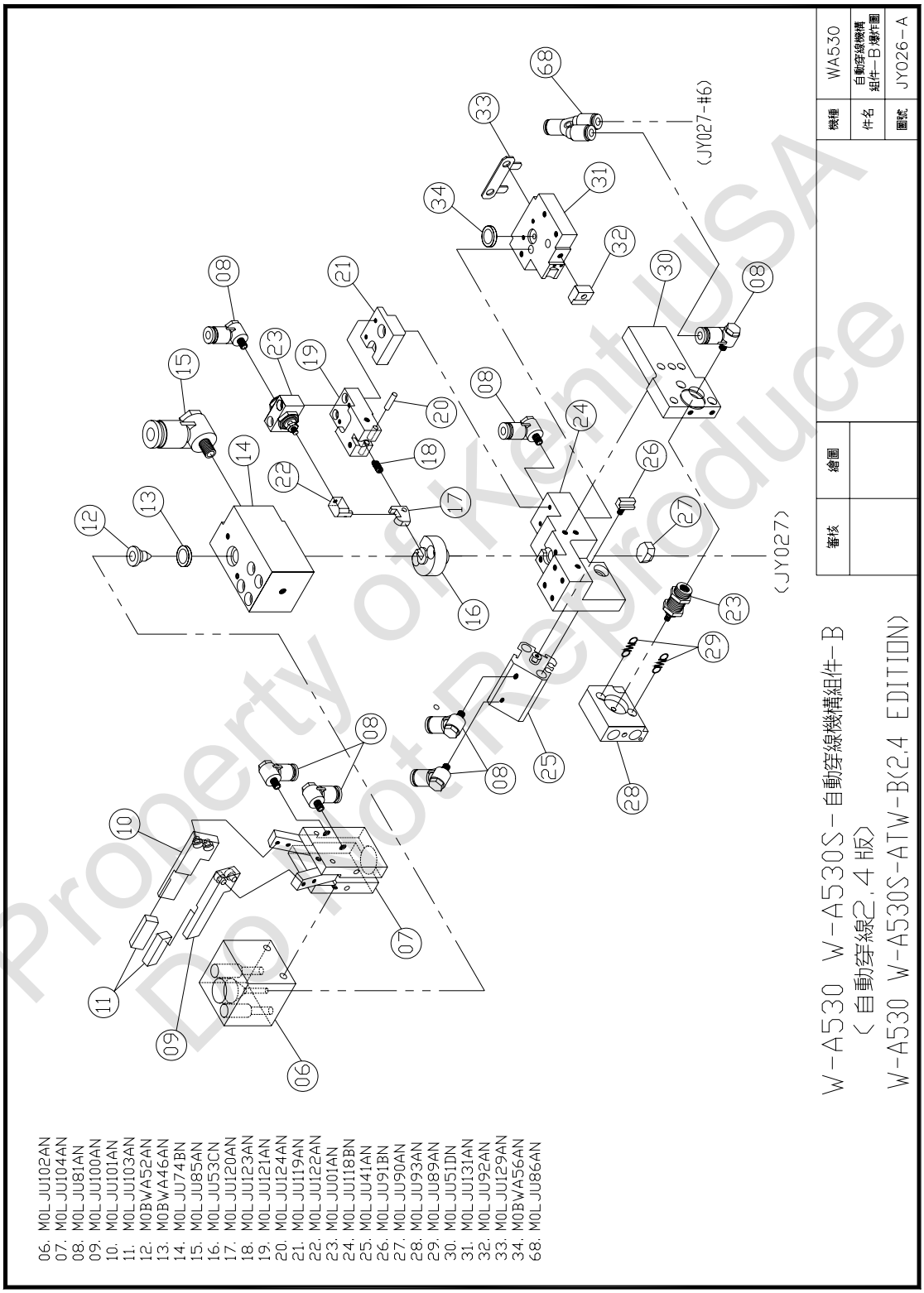

Property of Kent USA
Do Not Reproduce

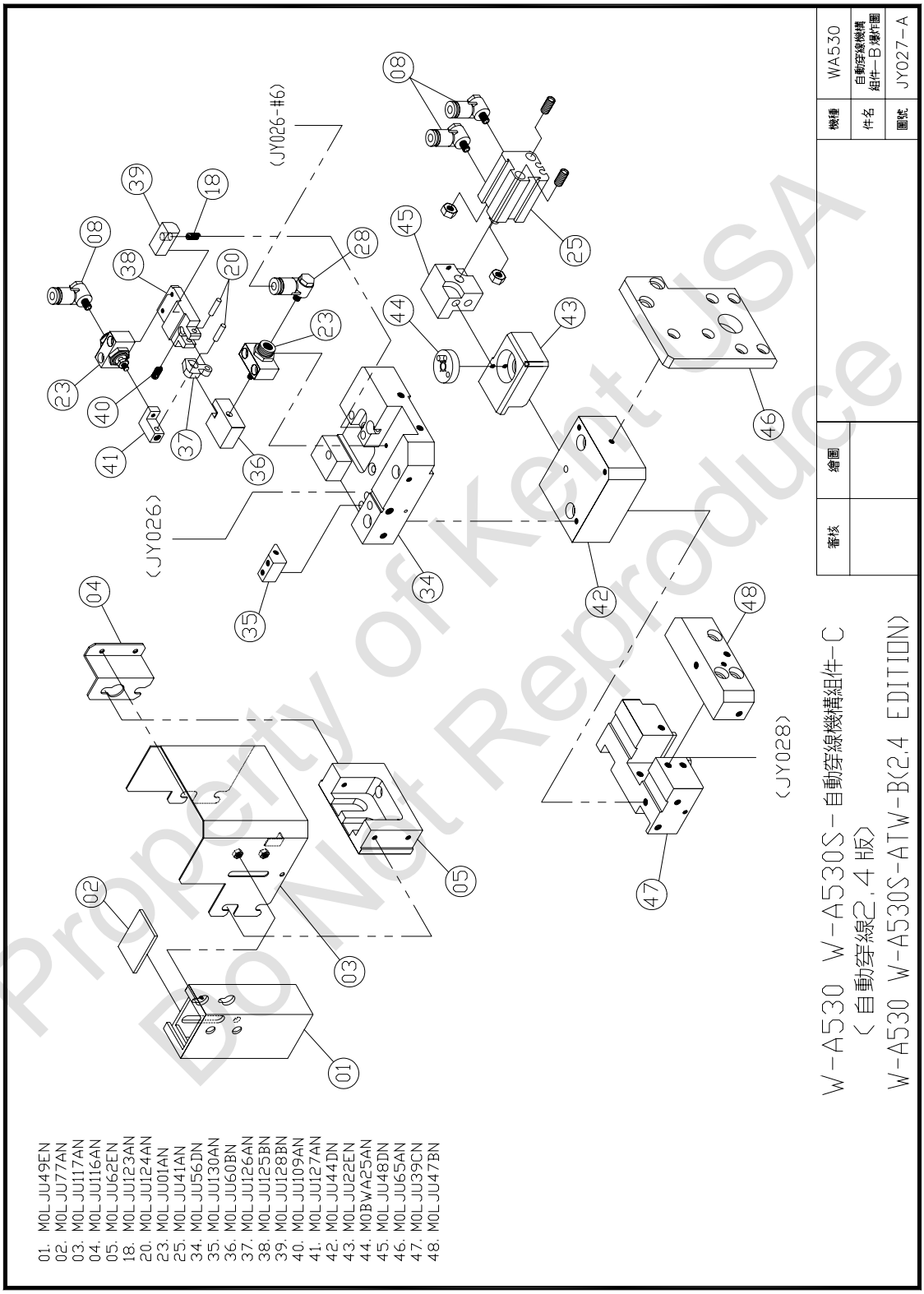

Property of Kent USA
Do Not Reproduce

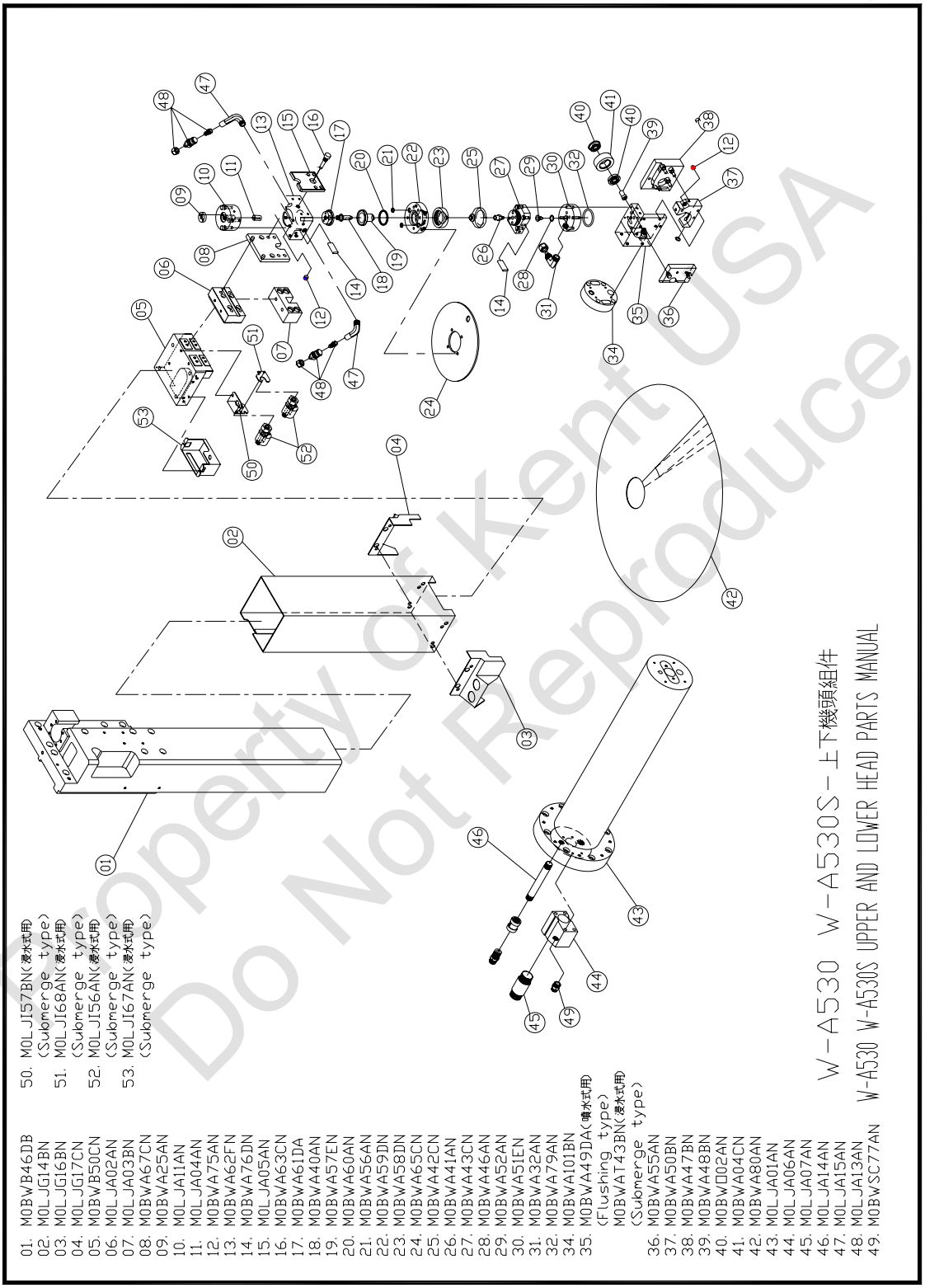

Property of Kent USA
Do Not Reproduce

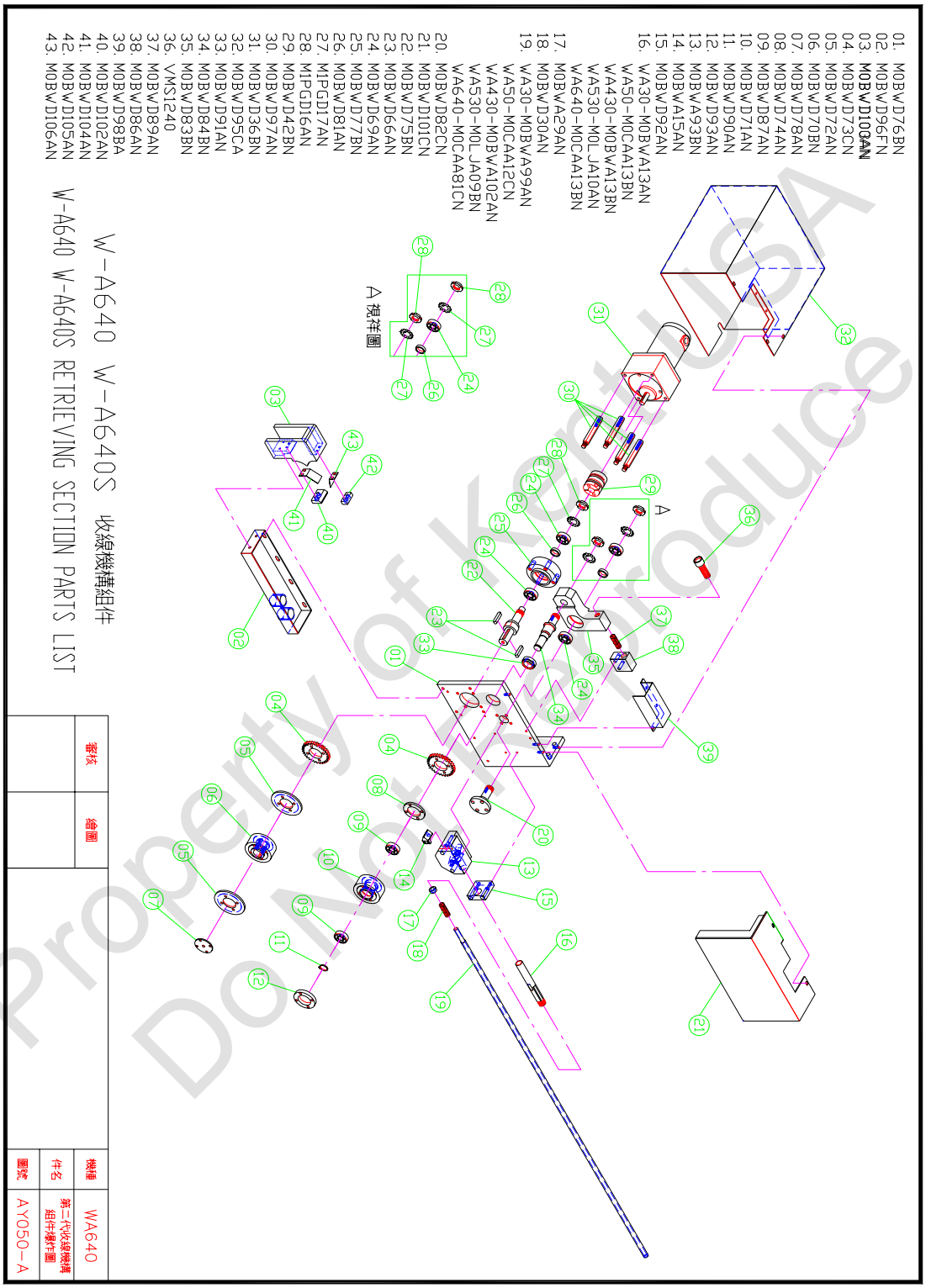

Property of KentUSA
Do Not Reproduce

The Agent's engineer training finished and signature:

Appendix

Property of Kent USA
Do Not Reproduce

Appendix 1

1.1 Overview of G instructions

Group	G Instruction	Function	Format
00	G04	Hold (for a specified time)	G04 P_或 G04X_
	G92	Program origin setup	G92 X_Y_Z_
01	G00	Fast positioning	G00 X_Y_U_V_
	G01	Linear cutting	G01 X_Y_U_V_
	G02	Clockwise arc cutting	G02 X_Y_I_J_U_V_K_L_
	G03	Counter clockwise arc cutting	G03 X_Y_I_J_U_V_K_L_
03	G90	Absolute coordinate instruction	G90（specifying absolute value coordinates）
	G91	Increment coordinate instruction	G91（specifying relative value coordinates）
04	G22	Software travel limit ON	G22 X_Y_I_J_
	G23	Software travel limit OFF	G23
05	G94	Manual speed feed	G94 F_
	G95	Servo speed feed	G95
06	G20	Imperial system input	G20
	G21	Metric system input	G21
07	G40	Wire diameter correction cancelled	G40 X_Y_
	G41	Wire diameter correction to left	G41 X_Y_D_ ,D_
	G42	Wire diameter correction to right	G42 X_Y_D_ ,D_
08	G50	Wire inclination cleared	G50 X_Y_
	G51	Wire inclination to left	G51 X_Y_T_
	G52	Wire inclination to right	G52 X_Y_T_
09	G60	Work piece top and bottom circular angle are equal	G60 X_Y_R_
	G61	Work piece top and bottom circular angle are unequal	G61 X_Y_R_
10	G48	Automatic circular angle ON	G48
	G49	Automatic circular angle OFF	G49

Property of Kent USA
Do Not Reproduce

1.2 Over view of M instructions

M instruction	Function	Descriptions
M00	Program stops	When the program is executed to the single block of M00, the machine operation will automatically stop, the electrical discharge power, wire feed, machining liquid supply and wire tension push button switch will automatically shut off. If restart of working is required, the above 4 machining conditions should be given, then press {CYCLE START}.
M01	Selective program stops	When the program is executed to the single block of M01, if the {OPT STOP} push button on the machine operation control panel is pushed, the effect will be the same as M00, and if {OPT STOP} is not pressed, the M01 instruction will be ignored and will not be executed.
M02	Program ends	When the program is executed to the single block of M02, this means the execution of that program has ended, and the machine operation will also automatically stop, the electrical discharge power, wire feed, machining liquid supply and wire tension push button switch will automatically shut off.
M21	Single Block Hold ON	The HOLD function between single blocks is valid, the hold time is set by the Block Stop Time (unit: sec.) in the SETTING screen.
M22	Single Block Hold OFF	The HOLD function between single blocks is invalid.
M30	Program ends and reverses	When the program is executed to the single block of M30, this means the execution of that program has ended, and the machine operation will also automatically stop, the electrical discharge power, wire feed, machining liquid supply and wire tension push button switch will automatically shut off. While the program will automatically reverse.
M41	Machining power off	Electrical discharge power is off
M42	Wire feed off	Copper wire feed stops
M43	Machining liquid supply off	Machining liquid supply stops
M70	Reverse travel starts	When the program is executed to the single block of M70, the copper wire will return to the machining starting point along the cutting path.
M81	Machining power on	Electrical discharge power is on
M81	Wire feed on	Copper wire feed starts
M82	Reverse travel starts	When the program is executed to the single block of M70, the copper wire will return to the machining starting point along the cutting path.
M98	Call sub-program	Used to call sub-program from the master program
M99	Sub-program ends	Used to indicate the termination of the sub-program, and return to the master program.

Property of Kent USA
Do Not Reproduce

Cutting parameter

Property of Kent USA
Do Not Reproduce

WCUT Machning Data Sheet

Wire Dia. and Type	Material Type	Material Thickness
0.20 ㎜ Brass	Steel（SKD11）	10 ㎜

Cutting Process		Stable Rough cut	Skim1	Skim2	Skim3	Skim4		Max Rough cut
EDM Number	NO							
ON TIME	T.ON	16	6	4	2	1		17
OFF TIME	T.OFF	8	13	12	11	11		8
ARC ON	A.ON	14	4	2	1	1		15
ARC OFF	A.OFF	10	15	14	13	11		10
Servo Voltage	S.V	32	50	50	45	50		32
Wire Tension	W.T	6	10	10	10	10		6
Wire Feed	W.F	10	10	10	10	10		10
Water Flow Rate	W.F.R	7	0	0	0	0		7
G94F	FEED	11.0	16.0	20.0	25.0	25.0		11.0
FEED%	F.R	120	120	120	120	120		130
Upper Nozzle Gap		0.2	0.2	0.2	0.2	0.2		0.2
Lower Nozzle Gap		0.2	0.2	0.2	0.2	0.2		0.2
Liquid Quantity （KΩ-㎝）		50~55	50~55	50~55	50~55	50~55		50~55
OFFSET No （D）		00	01	02	03	04		00
Rough cut		0.150	---------	---------	---------	---------		0.152
Rough cut&1 Skim		0.183	0.113	---------	---------	---------		---------
Rough cut&2 Skim		0.192	0.124	0.116	---------	---------		---------
Rough cut&3 Skim		0.198	0.129	0.119	0.117	---------		---------
Rough cut&4 Skim		0.199	0.130	0.120	0.118	0.117		---------
OFFSET Difference		---------	0.069	0.010	0.002	0.001		---------
RESULTS								
Cutting Feed Rate（㎜/min）		13.2~13.6	19.2~19.8	24.0~24.6	30.0~31.0	30.0~31.0		14.3~14.6
Gap Voltage（GV）		43~50	60~70	60~70	55~65	55~65		42~52
Finish Surface	μmRmax	15~18	7~9	5~7	4~6	3~5		17~20
Roughness	μmRa	2.8	1.4	1.1	0.9	0.55		3.0

Property of Kent USA
Do Not Reproduce

WCUT Machning Data Sheet

Wire Dia. and Type	Material Type	Material Thickness
0.20 ㎜ Brass	Steel（SKD11）	20 ㎜

Cutting Process		Stable Rough cut	Skim1	Skim2	Skim3	Skim 4		Max Rough cut
EDM Number	NO							
ON TIME	T.ON	16	6	4	2	1		17
OFF TIME	T.OFF	8	13	12	11	11		8
ARC ON	A.ON	14	4	2	1	1		15
ARC OFF	A.OFF	10	15	14	13	11		10
Servo Voltage	S.V	32	50	50	45	50		32
Wire Tension	W.T	6	10	10	10	10		6
Wire Feed	W.F	10	10	10	10	10		10
Water Flow Rate	W.F.R	7	0	0	0	0		7
G94F	FEED	5.0	8.0	11.0	12.0	12.0		5.0
FEED%	F.R	140	140	140	140	140		150
Upper Nozzle Gap		0.2	0.2	0.2	0.2	0.2		0.2
Lower Nozzle Gap		0.2	0.2	0.2	0.2	0.2		0.2
Liquid Quantity （KΩ-㎝）		50~55	50~55	50~55	50~55	50~55		50~55
OFFSET No （D）		00	01	02	03	04		00
Rough cut		0.151	---------	---------	---------	---------		0.152
Rough cut&1 Skim		0.185	0.114	---------	---------	---------		---------
Rough cut&2 Skim		0.193	0.125	0.118	---------	---------		---------
Rough cut&3 Skim		0.200	0.130	0.120	0.118	---------		---------
Rough cut&4 Skim		0.201	0.131	0.121	0.119	0.118		---------
OFFSET Difference		---------	0.070	0.010	0.002	0.001		---------
RESULTS								
Cutting Feed Rate（㎜/min）		7.0~7.4	11.2~11.5	15.4~15.8	16.8~17.2	16.8~17.2		7.5~7.7
Gap Voltage（GV）		42~50	57~68	60~70	56~68	60~70		41~52
Finish Surface	μmRmax	15~18	7~9	5~7	4~6	3~5		17~20
Roughness	μmRa	2.8	1.4	1.1	0.9	0.55		3.0

Property of Kent USA
Do Not Reproduce

WCUT Machning Data Sheet

Wire Dia. and Type	Material Type	Material Thickness
0.20 ㎜ Brass	Steel（SKD11）	30 ㎜

Cutting Process		Stable Rough cut	Skim1	Skim2	Skim3	Skim4		Max Rough cut
EDM Number	NO							
ON TIME	T.ON	16	6	4	2	1		17
OFF TIME	T.OFF	8	13	11	10	11		8
ARC ON	A.ON	14	4	2	1	1		15
ARC OFF	A.OFF	10	15	13	12	11		10
Servo Voltage	S.V	30	50	50	45	50		30
Wire Tension	W.T	6	10	10	10	10		5
Wire Feed	W.F	11	10	10	10	10		11
Water Flow Rate	W.F.R	7	0	0	0	0		7
G94F	FEED	3.5	4.8	6.0	7.0	7.0		3.5
FEED%	F.R	120	120	120	120	120		130
Upper Nozzle Gap		0.2	0.2	0.2	0.2	0.2		0.2
Lower Nozzle Gap		0.2	0.2	0.2	0.2	0.2		0.2
Liquid Quantity （KΩ-㎝）		50~55	50~55	50~55	50~55	50~55		50~55
OFFSET No （D）		00	01	02	03	04		00
Rough cut		0.153	---------	---------	---------	---------		0.155
Rough cut&1 Skim		0.186	0.116	---------	---------	---------		---------
Rough cut&2 Skim		0.195	0.127	0.120	---------	---------		---------
Rough cut&3 Skim		0.203	0.132	0.124	0.121	---------		---------
Rough cut&4 Skim		0.204	0.133	0.125	0.122	0.121		---------
OFFSET Difference		---------	0.071	0.008	0.003	0.001		---------
RESULTS								
Cutting Feed Rate（㎜/min）		4.2~4.5	5.7~5.9	7.2~7.6	8.4~8.8	8.4~8.8		4.5~4.8
Gap Voltage（GV）		50~60	60~70	65~75	60~70	60~70		46~55
Finish Surface	μmRmax	15~18	7~9	5~7	4~6	3~5		17~20
Roughness	μmRa	2.8	1.4	1.1	0.9	0.6		3.0

Property of Kent USA
Do Not Reproduce

WCUT Machning Data Sheet

Wire Dia. and Type	Material Type	Material Thickness
0.20 ㎜ Brass	Steel（SKD11）	40 ㎜

Cutting Process		Stable Rough cut	Skim1	Skim2	Skim3	Skim4		Max Rough cut
EDM Number	NO							
ON TIME	T.ON	16	6	4	2	1		17
OFF TIME	T.OFF	8	13	11	10	11		8
ARC ON	A.ON	14	4	2	1	1		15
ARC OFF	A.OFF	10	15	13	12	11		10
Servo Voltage	S.V	28	50	50	45	50		28
Wire Tension	W.T	6	11	11	11	11		6
Wire Feed	W.F	10	10	10	10	10		11
Water Flow Rate	W.F.R	7	0	0	0	0		7
G94F	FEED	3.0	4.0	5.0	5.5	5.5		3.0
FEED%	F.R	120	120	120	120	120		130
Upper Nozzle Gap		0.2	0.2	0.2	0.2	0.2		0.2
Lower Nozzle Gap		0.2	0.2	0.2	0.2	0.2		0.2
Liquid Quantity	（KΩ-cm）	50~55	50~55	50~55	50~55	50~55		50~55
OFFSET No	（D）	00	01	02	03	04		00
Rough cut		0.157	---------	---------	---------	---------		0.158
Rough cut&1 Skim		0.189	0.118	---------	---------	---------		---------
Rough cut&2 Skim		0.198	0.129	0.122	---------	---------		---------
Rough cut&3 Skim		0.205	0.133	0.126	0.123	---------		---------
Rough cut&4 Skim		0.206	0.134	0.127	0.124	0.123		---------
OFFSET Difference		---------	0.072	0.007	0.003	0.001		---------
RESULTS								
Cutting Feed Rate（㎜/min）		3.5~3.7	4.6~4.8	6.0~6.2	6.6~6.8	6.6~6.8		3.7~3.9
Gap Voltage（GV）		44~55	50~59	60~70	62~74	60~70		43~52
Finish Surface	μmRmax	15~18	7~9	5~7	4~6	3~5		17~20
Roughness	μmRa	2.8	1.4	1.1	0.9	0.57		3.0

Property of Kent USA
Do Not Reproduce

WCUT Machning Data Sheet

Wire Dia. and Type	Material Type	Material Thickness
ø0.20 ㎜ Brass	Steel（SKD11）	50 ㎜

Cutting Process		Stable Rough cut	Skim1	Skim2	Skim3	Skim4		Max Rough cut
EDM Number	NO							
ON TIME	T.ON	16	6	4	2	1		17
OFF TIME	T.OFF	8	12	12	10	11		8
ARC ON	A.ON	14	4	2	1	1		15
ARC OFF	A.OFF	10	14	14	12	11		10
Servo Voltage	S.V	28	50	50	40	50		25
Wire Tension	W.T	6	11	11	11	11		6
Wire Feed	W.F	10	10	10	10	10		11
Water Flow Rate	W.F.R	3	0	0	0	0		3
G94F	FEED	2.0	2.8	3.5	4.0	4.0		2.0
FEED%	F.R	140	140	140	140	140		150
Upper Nozzle Gap		0.2	0.2	0.2	0.2	0.2		0.2
Lower Nozzle Gap		0.2	0.2	0.2	0.2	0.2		0.2
Liquid Quantity （KΩ-cm）		50~55	50~55	50~55	50~55	50~55		50~55
OFFSET No （D）		00	01	02	03	04		00
Rough cut		0.159	---------	---------	---------	---------		0.160
Rough cut&1 Skim		0.190	0.120	---------	---------	---------		---------
Rough cut&2 Skim		0.200	0.131	0.127	---------	---------		---------
Rough cut&3 Skim		0.210	0.134	0.128	0.126	---------		---------
Rough cut&4 Skim		0.211	0.135	0.129	0.127	0.126		---------
OFFSET Difference		---------	0.076	0.006	0.002	0.001		---------
RESULTS								
Cutting Feed Rate（㎜/min）		2.76~2.82	3.64~3.96	4.46~4.64	5.56~5.64	5.56~5.64		2.98~3.04
Gap Voltage（GV）		35~45	57~67	68~75	60~70	60~70		39~50
Finish Surface Roughness	μmRmax	15~18	7~9	5~7	4~6	3~5		17~20
	μmRa	2.8	1.4	1.1	0.9	0.5		3.0

Property of Kent USA
Do Not Reproduce

WCUT Machning Data Sheet

Wire Dia. and Type	Material Type	Material Thickness
0.20 ㎜ Brass	Steel（SKD11）	60 ㎜

Cutting Process		Stable Rough cut	Skim1	Skim2	Skim3			Max Rough cut
EDM Number	NO							
ON TIME	T.ON	16	6	4	2			17
OFF TIME	T.OFF	8	12	12	10			8
ARC ON	A.ON	14	4	2	1			15
ARC OFF	A.OFF	10	14	14	12			10
Servo Voltage	S.V	28	50	50	40			25
Wire Tension	W.T	6	11	11	11			6
Wire Feed	W.F	11	11	11	11			11
Water Flow Rate	W.F.R	7	0	0	0			7
G94F	FEED	1.8	3.5	4.0	4.0			1.8
FEED%	F.R	130	130	130	130			140
Upper Nozzle Gap		0.2	0.2	0.2	0.2			0.2
Lower Nozzle Gap		0.2	0.2	0.2	0.2			0.2
Liquid Quantity （KΩ-㎝）		50~55	50~55	50~55	50~55			50~55
OFFSET No （D）		00	01	02	03			00
Rough cut		0.160	---------	---------	---------			0.162
Rough cut&1 Skim		0.192	0.121	---------	---------			---------
Rough cut&2 Skim		0.201	0.132	0.128	---------			---------
Rough cut&3 Skim		0.212	0.136	0.129	0.127			---------
OFFSET Difference		---------	0.076	0.007	0.002			---------
RESULTS								
Cutting Feed Rate（㎜/min）		2.34~2.38	4.35~4.55	4.90~5.20	5.20~5.35			2.52~2.58
Gap Voltage（GV）		47~58	58~70	60~70	55~64			46~57
Finish Surface	μmRmax	15~18	7~9	5~7	4~6			17~20
Roughness	μmRa	2.8	1.4	1.1	0.9			3.0

Property of Kent USA
Do Not Reproduce

WCUT Machning Data Sheet

Wire Dia. and Type	Material Type	Material Thickness
0.20 ㎜ Brass	Steel（SKD11）	70 ㎜

Cutting Process		Stable Rough cut	Skim1	Skim2	Skim3			Max Rough cut
EDM Number	NO							
ON TIME	T.ON	16	6	4	2			17
OFF TIME	T.OFF	9	11	11	10			9
ARC ON	A.ON	14	4	2	1			15
ARC OFF	A.OFF	11	13	13	12			11
Servo Voltage	S.V	28	45	45	40			28
Wire Tension	W.T	6	11	11	11			6
Wire Feed	W.F	11	11	11	11			11
Water Flow Rate	W.F.R	7	0	0	0			7
G94F	FEED	1.2	2.1	2.6	2.6			1.3
FEED%	F.R	160	160	160	160			160
Upper Nozzle Gap		0.2	0.2	0.2	0.2			0.2
Lower Nozzle Gap		0.2	0.2	0.2	0.2			0.2
Liquid Quantity （KΩ-㎝）		55~60	55~60	55~60	55~60			55~60
OFFSET No （D）		00	01	02	03			00
Rough cut		0.162	---------	---------	---------			0.163
Rough cut&1 Skim		0.193	0.123	---------	---------			---------
Rough cut&2 Skim		0.203	0.133	0.129	---------			---------
Rough cut&3 Skim		0.215	0.136	0.130	0.128			---------
OFFSET Difference		---------	0.079	0.006	0.002			---------
RESULTS								
Cutting Feed Rate（㎜/min）		1.92~1.95	3.30~3.40	4.00~4.20	4.16~4.32			2.08~2.16
Gap Voltage（GV）		44~56	56~67	60~70	56~68			45~53
Finish Surface	μmRmax	15~18	7~9	5~7	4~6			17~20
Roughness	μmRa	2.8	1.4	1.1	0.9			3.0

Property of Kent USA
Do Not Reproduce

WCUT Machning Data Sheet

Wire Dia. and Type	Material Type	Material Thickness
0.20 ㎜ Brass	Steel（SKD11）	80 ㎜

Cutting Process		Stable Rough cut	Skim1	Skim2	Skim3			Max Rough cut
EDM Number	NO							
ON TIME	T.ON	16	6	4	2			17
OFF TIME	T.OFF	9	11	11	10			9
ARC ON	A.ON	14	4	3	2			15
ARC OFF	A.OFF	11	13	13	12			11
Servo Voltage	S.V	28	45	45	40			28
Wire Tension	W.T	6	11	11	12			6
Wire Feed	W.F	11	11	11	11			11
Water Flow Rate	W.F.R	7	0	0	0			7
G94F	FEED	1.2	2.2	2.9	2.9			1.2
FEED%	F.R	130	130	130	130			140
Upper Nozzle Gap		0.2	0.2	0.2	0.2			0.2
Lower Nozzle Gap		0.2	0.2	0.2	0.2			0.2
Liquid Quantity （KΩ-㎝）		55~60	55~60	55~60	55~60			55~60
OFFSET No （D）		00	01	02	03			00
Rough cut		0.163	---------	---------	---------			0.165
Rough cut&1 Skim		0.195	0.125	---------	---------			---------
Rough cut&2 Skim		0.205	0.134	0.130	---------			---------
Rough cut&3 Skim		0.217	0.137	0.132	0.129			---------
OFFSET Difference		---------	0.080	0.005	0.003			---------
RESULTS								
Cutting Feed Rate（㎜/min）		1.56~1.59	2.84~2.90	3.45~3.75	3.77~3.95			1.64~1.72
Gap Voltage（GV）		41~50	55~68	57~68	52~61			40~50
Finish Surface	μmRmax	15~18	7~9	5~7	4~6			17~20
Roughness	μmRa	2.8	1.4	1.1	0.9			3.0

Property of Kent USA
Do Not Reproduce

WCUT Machning Data Sheet

Wire Dia. and Type	Material Type	Material Thickness
0.20 ㎜ Brass	Steel（SKD11）	90 ㎜

Cutting Process		Stable Rough cut	Skim1	Skim2	Skim3			Max Rough cut
EDM Number	NO							
ON TIME	T.ON	16	6	4	2			17
OFF TIME	T.OFF	10	10	11	10			10
ARC ON	A.ON	14	4	3	2			15
ARC OFF	A.OFF	12	12	13	12			12
Servo Voltage	S.V	28	45	45	40			28
Wire Tension	W.T	5	11	11	12			5
Wire Feed	W.F	12	12	12	12			12
Water Flow Rate	W.F.R	7	0	0	0			7
G94F	FEED	0.9	1.7	2.2	2.2			0.9
FEED%	F.R	140	140	140	140			150
Upper Nozzle Gap		0.2	0.2	0.2	0.2			0.2
Lower Nozzle Gap		0.2	0.2	0.2	0.2			0.2
Liquid Quantity （KΩ-㎝）		55~60	55~60	55~60	55~60			55~60
OFFSET No （D）		00	01	02	03			00
Rough cut		0.165	---------	---------	---------			0.167
Rough cut&1 Skim		0.197	0.127	---------	---------			---------
Rough cut&2 Skim		0.207	0.136	0.132	---------			---------
Rough cut&3 Skim		0.219	0.140	0.134	0.130			---------
OFFSET Difference		---------	0.079	0.006	0.004			---------
RESULTS								
Cutting Feed Rate（㎜/min）		1.24~1.26	2.24~2.38	3.00~3.08	3.00~3.08			1.32~1.36
Gap Voltage（GV）		38~50	54~64	55~68	49~60			37~50
Finish Surface	μmRmax	15~18	7~9	5~7	4~6			17~20
Roughness	μmRa	2.8	1.4	1.1	0.9			3.0

Property of Kent USA
Do Not Reproduce

WCUT Machning Data Sheet

Wire Dia. and Type	Material Type	Material Thickness
0.20 ㎜ Brass	Steel（SKD11）	100 ㎜

Cutting Process		Stable Rough cut	Skim1	Skim2	Skim3			Max Rough cut
EDM Number	NO							
ON TIME	T.ON	16	6	4	2			17
OFF TIME	T.OFF	11	10	11	9			10
ARC ON	A.ON	14	5	3	2			15
ARC OFF	A.OFF	12	12	13	11			12
Servo Voltage	S.V	28	45	45	40			28
Wire Tension	W.T	5	11	11	12			5
Wire Feed	W.F	13	12	12	12			13
Water Flow Rate	W.F.R	7	0	0	0			7
G94F	FEED	0.9	1.8	2.1	2.1			0.9
FEED%	F.R	120	120	120	120			130
Upper Nozzle Gap		0.2	0.2	0.2	0.2			0.2
Lower Nozzle Gap		0.2	0.2	0.2	0.2			0.2
Liquid Quantity （KΩ-㎝）		55~60	55~60	55~60	55~60			55~60
OFFSET No （D）		00	01	02	03			00
Rough cut		0.166	---------	---------	---------			0.168
Rough cut&1 Skim		0.197	0.126	---------	---------			---------
Rough cut&2 Skim		0.206	0.135	0.131	---------			---------
Rough cut&3 Skim		0.219	0.139	0.133	0.130			---------
OFFSET Difference		---------	0.080	0.006	0.003			---------
RESULTS								
Cutting Feed Rate（㎜/min）		1.07~1.09	2.13~2.16	2.48~2.52	2.52~2.56			1.15~1.18
Gap Voltage（GV）		36~50	53~63	57~70	46~58			34~55
Finish Surface	μmRmax	15~18	7~9	5~7	4~6			17~20
Roughness	μmRa	2.8	1.4	1.1	0.9			3.0

Property of Kent USA
Do Not Reproduce

WCUT Machning Data Sheet

Wire Dia. and Type	Material Type	Material Thickness
0.20 ㎜ Brass	Copper	10 ㎜

Cutting Process		Stable Rough cut	Skim1	Skim2	Skim3	Skim4		Max Rough cut
EDM Number	NO							
ON TIME	T.ON	16	6	4	2	1		18
OFF TIME	T.OFF	10	13	13	12	11		11
ARC ON	A.ON	12	4	2	1	1		14
ARC OFF	A.OFF	12	15	15	14	11		13
Servo Voltage	S.V	38	45	50	50	50		38
Wire Tension	W.T	6	9	9	10	10		6
Wire Feed	W.F	9	10	10	10	10		9
Water Flow Rate	W.F.R	7	0	0	0	0		7
G94F	FEED	13.0	20.0	24.0	24.0	24.0		13.0
FEED%	F.R	120	120	120	120	120		140
Upper Nozzle Gap		0.2	0.2	0.2	0.2	0.2		0.2
Lower Nozzle Gap		0.2	0.2	0.2	0.2	0.2		0.2
Liquid Quantity	（KΩ-㎝）	50~55	50~55	50~55	50~55	50~55		50~55
OFFSET No	（D）	00	01	02	03	04		00
Rough cut		0.166	---------	---------	---------	---------		0.168
Rough cut&1 Skim		0.195	0.126	---------	---------	---------		---------
Rough cut&2 Skim		0.201	0.133	0.125	---------	---------		---------
Rough cut&3 Skim		0.203	0.135	0.128	0.125	---------		---------
Rough cut&4 Skim		0.204	0.136	0.129	0.126	0.125		---------
OFFSET Difference		---------	0.068	0.007	0.003	0.001		---------
RESULTS								
Cutting Feed Rate（㎜/min）		15.4~15.7	23.5~24.5	28.6~29.2	28.8~29.4	28.8~29.4		18.0~18.4
Gap Voltage（GV）		41~50	50~61	55~68	58~70	60~70		42~53
Finish Surface	μmRmax	15~18	7~9	5~7	4~6	3~5		17~20
Roughness	μmRa	2.8	1.4	1.1	0.9	0.55		3.0

Property of Kent USA
Do Not Reproduce

WCUT Machning Data Sheet

Wire Dia. and Type	Material Type	Material Thickness
0.20 ㎜ Brass	Copper	20 ㎜

Cutting Process		Stable Rough cut	Skim1	Skim2	Skim3	Skim4		Max Rough cut
EDM Number	NO							
ON TIME	T.ON	16	6	4	2	1		18
OFF TIME	T.OFF	9	13	13	12	11		11
ARC ON	A.ON	12	4	2	1	1		14
ARC OFF	A.OFF	11	15	15	14	11		13
Servo Voltage	S.V	38	45	50	50	50		38
Wire Tension	W.T	6	9	9	10	10		6
Wire Feed	W.F	9	10	10	10	10		9
Water Flow Rate	W.F.R	7	0	0	0	0		7
G94F	FEED	7.5	10.0	13.0	13.0	13.0		7.5
FEED%	F.R	100	100	100	100	100		120
Upper Nozzle Gap		0.2	0.2	0.2	0.2	0.2		0.2
Lower Nozzle Gap		0.2	0.2	0.2	0.2	0.2		0.2
Liquid Quantity	（KΩ-㎝）	50~55	50~55	50~55	50~55	50~55		50~55
OFFSET No	（D）	00	01	02	03	04		00
Rough cut		0.167	---------	---------	---------	---------		0.169
Rough cut&1 Skim		0.196	0.127	---------	---------	---------		---------
Rough cut&2 Skim		0.202	0.134	0.127	---------	---------		---------
Rough cut&3 Skim		0.205	0.135	0.129	0.126	---------		---------
Rough cut&4 Skim		0.206	0.136	0.130	0.127	0.126		---------
OFFSET Difference		---------	0.070	0.006	0.003	0.001		---------
RESULTS								
Cutting Feed Rate（㎜/min）		7.4~7.9	9.5~10.5	12.8~13.6	13.0~14.0	13.0~14.0		8.9~9.6
Gap Voltage（GV）		40~49	50~58	55~68	60~70	60~70		42~49
Finish Surface	μmRmax	15~18	7~9	5~7	4~6	3~5		17~20
Roughness	μmRa	2.8	1.4	1.1	0.9	0.57		3.0

Property of Kent USA
Do Not Reproduce

WCUT Machning Data Sheet

Wire Dia. and Type	Material Type	Material Thickness
0.20 ㎜ Brass	Copper	30 ㎜

Cutting Process		Stable Rough cut	Skim1	Skim2	Skim3	Skim4		Max Rough cut
EDM Number	NO							
ON TIME	T.ON	16	6	4	2	1		18
OFF TIME	T.OFF	9	13	13	11	11		10
ARC ON	A.ON	13	4	2	1	1		15
ARC OFF	A.OFF	11	15	15	13	11		12
Servo Voltage	S.V	35	45	50	45	50		35
Wire Tension	W.T	6	10	10	11	11		6
Wire Feed	W.F	9	10	10	10	10		9
Water Flow Rate	W.F.R	7	0	0	0	0		7
G94F	FEED	5.0	8.5	12.0	12.0	12.0		5.0
FEED%	F.R	110	110	110	110	110		120
Upper Nozzle Gap		0.2	0.2	0.2	0.2	0.2		0.2
Lower Nozzle Gap		0.2	0.2	0.2	0.2	0.2		0.2
Liquid Quantity	（KΩ-cm）	50~55	50~55	50~55	50~55	50~55		50~55
OFFSET No	（D）	00	01	02	03	04		00
Rough cut		0.169	---------	---------	---------	---------		0.171
Rough cut&1 Skim		0.197	0.129	---------	---------	---------		---------
Rough cut&2 Skim		0.202	0.134	0.128	---------	---------		---------
Rough cut&3 Skim		0.206	0.135	0.130	0.127	---------		---------
Rough cut&4 Skim		0.207	0.136	0.131	0.128	0.127		---------
OFFSET Difference		---------	0.071	0.005	0.003	0.001		---------
RESULTS								
Cutting Feed Rate（㎜/min）		5.4~5.6	9.3~9.8	13.0~13.4	13.1~13.6	13.1~13.6		5.8~6.5
Gap Voltage（GV）		39~46	50~60	60~70	60~70	60~70		40~50
Finish Surface	μmRmax	15~18	7~9	5~7	4~6	3~5		17~20
Roughness	μmRa	2.8	1.4	1.1	0.9	0.6		3.0

Property of Kent USA
Do Not Reproduce

WCUT Machning Data Sheet

Wire Dia. and Type	Material Type	Material Thickness
0.20 ㎜ Brass	Copper	40 ㎜

Cutting Process		Stable Rough cut	Skim1	Skim2	Skim3	Skim4		Max Rough cut
EDM Number	NO							
ON TIME	T.ON	16	6	4	2	1		18
OFF TIME	T.OFF	9	12	12	11	11		10
ARC ON	A.ON	13	4	2	1	1		15
ARC OFF	A.OFF	11	14	14	13	11		12
Servo Voltage	S.V	35	45	50	50	50		35
Wire Tension	W.T	6	10	10	11	11		6
Wire Feed	W.F	10	10	10	10	10		10
Water Flow Rate	W.F.R	7	0	0	0	0		7
G94F	FEED	3.0	4.0	5.1	5.1	5.1		3.0
FEED%	F.R	140	140	140	140	140		160
Upper Nozzle Gap		0.2	0.2	0.2	0.2	0.2		0.2
Lower Nozzle Gap		0.2	0.2	0.2	0.2	0.2		0.2
Liquid Quantity	（KΩ-cm）	50~55	50~55	50~55	50~55	50~55		50~55
OFFSET No	（D）	00	01	02	03	04		00
Rough cut		0.170	---------	---------	---------	---------		0.172
Rough cut&1 Skim		0.198	0.130	---------	---------	---------		---------
Rough cut&2 Skim		0.203	0.135	0.128	---------	---------		---------
Rough cut&3 Skim		0.208	0.136	0.131	0.128	---------		---------
Rough cut&4 Skim		0.209	0.137	0.132	0.129	0.128		---------
OFFSET Difference		---------	0.072	0.005	0.003	0.001		---------
RESULTS								
Cutting Feed Rate（㎜/min）		4.15~4.26	5.50~5.70	7.10~7.24	7.14~7.26	7.14~7.26		4.70~4.90
Gap Voltage（GV）		42~50	50~60	58~69	60~70	60~70		42~53
Finish Surface	μmRmax	15~18	7~9	5~7	4~6	3~5		17~20
Roughness	μmRa	2.8	1.4	1.1	0.9	0.58		3.0

Property of Kent USA
Do Not Reproduce

WCUT Machning Data Sheet

Wire Dia. and Type	Material Type	Material Thickness
0.20 ㎜ Brass	Copper	50 ㎜

Cutting Process		Stable Rough cut	Skim1	Skim2	Skim3	Skim4		Max Rough cut
EDM Number	NO							
ON TIME	T.ON	16	6	4	2	1		18
OFF TIME	T.OFF	8	12	12	10	11		9
ARC ON	A.ON	14	4	2	1	1		16
ARC OFF	A.OFF	10	14	14	12	11		10
Servo Voltage	S.V	30	50	55	45	50		30
Wire Tension	W.T	6	10	11	13	11		6
Wire Feed	W.F	10	10	10	11	11		10
Water Flow Rate	W.F.R	7	0	0	0	0		7
G94F	FEED	2.5	3.5	4.3	4.3	4.3		2.5
FEED%	F.R	140	140	140	140	140		160
Upper Nozzle Gap		0.2	0.2	0.2	0.2	0.2		0.2
Lower Nozzle Gap		0.2	0.2	0.2	0.2	0.2		0.2
Liquid Quantity	（KΩ-㎝）	50~60	50~60	50~60	50~60	50~60		50~60
OFFSET No	（D）	00	01	02	03	04		00
Rough cut		0.172	---------	---------	---------	---------		---------
Rough cut&1 Skim		0.200	0.132	---------	---------	---------		---------
Rough cut&2 Skim		0.205	0.137	0.130	---------	---------		---------
Rough cut&3 Skim		0.210	0.138	0.132	0.129	---------		---------
Rough cut&4 Skim		0.211	0.138	0.133	0.130	0.129		---------
OFFSET Difference		---------	0.072	0.006	0.003	0.001		---------
RESULTS								
Cutting Feed Rate（㎜/min）		3.43~3.65	4.85~5.14	5.97~6.08	5.98~6.12	5.98~6.12		3.96~4.05
Gap Voltage（GV）		40~50	60~70	60~70	60~70	60~70		40~50
Finish Surface	μmRmax	15~18	7~9	5~7	4~6	3~5		17~20
Roughness	μmRa	2.8	1.4	1.1	0.9	0.6		3.0

Property of Kent USA
Do Not Reproduce

WCUT Machning Data Sheet

Wire Dia. and Type	Material Type	Material Thickness
0.20 ㎜ Brass	Copper	60 ㎜

Cutting Process		Stable Rough cut	Skim1	Skim2	Skim3			Max Rough cut
EDM Number	NO							
ON TIME	T.ON	16	6	4	2			18
OFF TIME	T.OFF	8	12	12	10			9
ARC ON	A.ON	14	4	2	1			16
ARC OFF	A.OFF	10	14	14	12			10
Servo Voltage	S.V	33	50	55	45			33
Wire Tension	W.T	6	10	11	13			6
Wire Feed	W.F	10	10	10	11			10
Water Flow Rate	W.F.R	7	0	0	0			7
G94F	FEED	2.5	3.5	4.3	4.3			2.5
FEED%	F.R	110	130	130	130			130
Upper Nozzle Gap		0.2	0.2	0.2	0.2			0.2
Lower Nozzle Gap		0.2	0.2	0.2	0.2			0.2
Liquid Quantity （KΩ-㎝）		55~60	55~60	55~60	55~60			55~60
OFFSET No （D）		00	01	02	03			00
Rough cut		0.173	---------	---------	---------			0.175
Rough cut&1 Skim		0.201	0.132	---------	---------			---------
Rough cut&2 Skim		0.206	0.137	0.130	---------			---------
Rough cut&3 Skim		0.210	0.138	0.133	0.130			---------
OFFSET Difference		---------	0.072	0.005	0.003			---------
RESULTS								
Cutting Feed Rate（㎜/min）		2.71~2.82	4.48~5.63	5.55~5.72	5.59~5.86			3.18~3.43
Gap Voltage（GV）		38~47	49~56	60~70	58~72			39~49
Finish Surface	μmRmax	15~18	7~9	5~7	4~6			17~20
Roughness	μmRa	2.8	1.4	1.1	0.9			3.0

Property of Kent USA
Do Not Reproduce

WCUT Machning Data Sheet

Wire Dia. and Type	Material Type	Material Thickness
0.20 ㎜ Brass	Copper	70 ㎜

Cutting Process		Stable Rough cut	Skim1	Skim2	Skim3			Max Rough cut
EDM Number	NO							
ON TIME	T.ON	16	6	4	2			18
OFF TIME	T.OFF	9	11	12	10			10
ARC ON	A.ON	14	4	2	1			16
ARC OFF	A.OFF	11	13	13	12			12
Servo Voltage	S.V	32	45	50	45			32
Wire Tension	W.T	6	11	11	12			6
Wire Feed	W.F	11	11	11	11			11
Water Flow Rate	W.F.R	7	0	0	0			7
G94F	FEED	2.2	3.2	4.0	4.0			2.5
FEED%	F.R	100	100	100	100			100
Upper Nozzle Gap		0.2	0.2	0.2	0.2			0.2
Lower Nozzle Gap		0.2	0.2	0.2	0.2			0.2
Liquid Quantity （KΩ-㎝）		50~55	50~55	50~55	50~55			50~55
OFFSET No （D）		00	01	02	03			00
Rough cut		0.175	---------	---------	---------			0.177
Rough cut&1 Skim		0.205	0.134	---------	---------			---------
Rough cut&2 Skim		0.210	0.139	0.133	---------			---------
Rough cut&3 Skim		0.215	0.142	0.135	0.132			---------
OFFSET Difference		---------	0.073	0.007	0.003			---------
RESULTS								
Cutting Feed Rate（㎜/min）		2.16~2.26	3.15~3.26	3.95~4.16	4.00~4.16			2.48~2.58
Gap Voltage（GV）		38~49	50~60	59~70	60~70			42~50
Finish Surface	μmRmax	15~18	7~9	5~7	4~6			17~20
Roughness	μmRa	2.8	1.4	1.1	0.9			3.0

Property of Kent USA
Do Not Reproduce

WCUT Machning Data Sheet

Wire Dia. and Type	Material Type	Material Thickness
0.20 ㎜ Brass	Copper	80 ㎜

Cutting Process		Stable Rough cut	Skim1	Skim2	Skim3			Max Rough cut
EDM Number	NO							
ON TIME	T.ON	16	6	4	2			18
OFF TIME	T.OFF	9	11	12	10			10
ARC ON	A.ON	14	4	2	1			16
ARC OFF	A.OFF	11	13	13	12			12
Servo Voltage	S.V	32	45	50	45			32
Wire Tension	W.T	6	11	11	12			6
Wire Feed	W.F	11	11	11	11			11
Water Flow Rate	W.F.R	7	0	0	0			7
G94F	FEED	1.9	2.8	3.6	3.6			2.1
FEED%	F.R	100	100	100	100			100
Upper Nozzle Gap		0.2	0.2	0.2	0.2			0.2
Lower Nozzle Gap		0.2	0.2	0.2	0.2			0.2
Liquid Quantity （KΩ-㎝）		55~60	55~60	55~60	55~60			55~60
OFFSET No （D）		00	01	02	03			00
Rough cut		0.176	---------	---------	---------			0.178
Rough cut&1 Skim		0.206	0.135	---------	---------			---------
Rough cut&2 Skim		0.210	0.140	0.133	---------			---------
Rough cut&3 Skim		0.215	0.143	0.136	0.132			---------
OFFSET Difference		---------	0.072	0.007	0.004			---------
RESULTS								
Cutting Feed Rate（㎜/min）		1.85~1.92	2.76~2.88	3.58~3.76	3.60~3.78			2.06~2.16
Gap Voltage（GV）		37~50	49~59	60~70	60~70			40~50
Finish Surface	μmRmax	15~18	7~9	5~7	4~6			17~20
Roughness	μmRa	2.8	1.4	1.1	0.9			3.0

Property of Kent USA
Do Not Reproduce

WCUT Machning Data Sheet

Wire Dia. and Type	Material Type	Material Thickness
0.20 ㎜ Brass	Copper	90 ㎜

Cutting Process		Stable Rough cut	Skim1	Skim2	Skim3			Max Rough cut
EDM Number	NO							
ON TIME	T.ON	16	6	4	2			18
OFF TIME	T.OFF	10	11	11	11			11
ARC ON	A.ON	14	5	3	2			16
ARC OFF	A.OFF	12	13	13	12			13
Servo Voltage	S.V	32	45	45	40			32
Wire Tension	W.T	7	11	11	12			7
Wire Feed	W.F	12	12	12	12			12
Water Flow Rate	W.F.R	7	0	0	0			7
G94F	FEED	1.4	2.5	3.2	3.3			1.4
FEED%	F.R	110	110	110	110			120
Upper Nozzle Gap		0.2	0.2	0.1	0.1			0.2
Lower Nozzle Gap		0.2	0.2	0.1	0.2			0.2
Liquid Quantity （KΩ-㎝）		55~60	55~60	55~60	55~60			55~60
OFFSET No （D）		00	01	02	03			00
Rough cut		0.178	---------	---------	---------			0.180
Rough cut&1 Skim		0.209	0.137	---------	---------			---------
Rough cut&2 Skim		0.213	0.142	0.134	---------			---------
Rough cut&3 Skim		0.218	0.146	0.138	0.134			---------
OFFSET Difference		---------	0.072	0.008	0.004			---------
RESULTS								
Cutting Feed Rate（㎜/min）		1.52~1.58	2.73~2.85	3.52~3.63	3.63~3.70			1.65~1.72
Gap Voltage（GV）		38~50	48~59	50~60	55~65			39~52
Finish Surface	μmRmax	15~18	7~9	5~7	4~6			17~20
Roughness	μmRa	2.8	1.4	1.1	0.9			3.0

Property of Kent USA
Do Not Reproduce

WCUT Machning Data Sheet

Wire Dia. and Type	Material Type	Material Thickness
0.20 ㎜ Brass	Copper	100 ㎜

Cutting Process		Stable Rough cut	Skim1	Skim2	Skim3			Max Rough cut
EDM Number	NO							
ON TIME	T.ON	16	6	4	2			18
OFF TIME	T.OFF	10	11	11	11			11
ARC ON	A.ON	14	5	3	2			16
ARC OFF	A.OFF	12	13	13	12			13
Servo Voltage	S.V	32	45	45	40			32
Wire Tension	W.T	7	11	11	12			7
Wire Feed	W.F	12	12	12	12			12
Water Flow Rate	W.F.R	7	0	0	0			7
G94F	FEED	1.4	2.5	3.2	3.3			1.4
FEED%	F.R	100	100	100	100			110
Upper Nozzle Gap		0.2	0.2	0.1	0.1			0.2
Lower Nozzle Gap		0.2	0.2	0.1	0.2			0.2
Liquid Quantity	（KΩ-㎝）	55~60	55~60	55~60	55~60			55~60
OFFSET No	（D）	00	01	02	03			00
Rough cut		0.179	---------	---------	---------			0.181
Rough cut&1 Skim		0.211	0.138	---------	---------			---------
Rough cut&2 Skim		0.215	0.143	0.135	---------			---------
Rough cut&3 Skim		0.220	0.147	0.139	0.135			---------
OFFSET Difference		---------	0.073	0.008	0.004			---------
RESULTS								
Cutting Feed Rate（㎜/min）		1.38~1.44	2.50~2.60	3.20~3.30	3.30~3.40			1.50~1.56
Gap Voltage（GV）		37~56	45~56	50~62	58~68			36~46
Finish Surface	μmRmax	15~18	7~9	5~7	4~6			17~20
Roughness	μmRa	2.8	1.4	1.1	0.9			3.0

Property of Kent USA
Do Not Reproduce

WCUT Machning Data Sheet

Wire Dia. and Type	Material Type	Material Thickness
0.20 ㎜ Brass	Aluminium	10 ㎜

Cutting Process		Stable Rough cut	Skim1	Skim2	Skim3	Skim4		Max Rough cut
EDM Number	NO							
ON TIME	T.ON	13	6	4	2	1		14
OFF TIME	T.OFF	12	13	13	13	11		13
ARC ON	A.ON	10	4	2	1	1		12
ARC OFF	A.OFF	14	15	15	15	11		15
Servo Voltage	S.V	50	55	55	55	50		50
Wire Tension	W.T	6	8	8	8	10		6
Wire Feed	W.F	9	10	10	10	10		9
Water Flow Rate	W.F.R	7	0	0	0	0		7
G94F	FEED	10	15	20	25	25.0		10
FEED%	F.R	120	120	120	120	120		130
Upper Nozzle Gap		0.2	0.2	0.2	0.2	0.2		0.2
Lower Nozzle Gap		0.2	0.2	0.2	0.2	0.2		0.2
Liquid Quantity	（KΩ-cm）	50~55	50~55	50~55	50~55	50~55		50~55
OFFSET No	（D）	00	01	02	03	04		00
Rough cut		0.168	---------	---------	---------	---------		0.170
Rough cut&1 Skim		0.195	0.125	---------	---------	---------		---------
Rough cut&2 Skim		0.205	0.137	0.121	---------	---------		---------
Rough cut&3 Skim		0.215	0.148	0.127	0.120	---------		---------
Rough cut&4 Skim		0.216	0.149	0.128	0.121	0.120		---------
OFFSET Difference		---------	0.067	0.021	0.003	0.001		---------
RESULTS								
Cutting Feed Rate（㎜/min）		12.0~13.5	18.0~19.6	24.0~25.0	30.0~32.0	30.0~32.0		13.0~14.0
Gap Voltage（GV）		58~65	70~80	75~80	70~75	70~75		60~70
Finish Surface	μmRmax	15~18	7~9	5~7	4~6	3~5		17~20
Roughness	μmRa	2.8	1.4	1.1	0.9	0.55		3.0

Property of Kent USA
Do Not Reproduce

WCUT Machning Data Sheet

Wire Dia. and Type	Material Type	Material Thickness
0.20 ㎜ Brass	Aluminium	20 ㎜

Cutting Process		Stable Rough cut	Skim1	Skim2	Skim3	Skim4		Max Rough cut
EDM Number	NO							
ON TIME	T.ON	13	6	4	2	1		14
OFF TIME	T.OFF	12	13	13	13	11		13
ARC ON	A.ON	10	4	2	1	1		12
ARC OFF	A.OFF	14	15	15	15	11		15
Servo Voltage	S.V	50	55	55	50	50		50
Wire Tension	W.T	6	8	8	8	10		6
Wire Feed	W.F	9	10	10	10	10		9
Water Flow Rate	W.F.R	7	0	0	0	0		7
G94F	FEED	6.0	8.0	10.0	12.5	12.5		6.0
FEED%	F.R	120	120	120	120	120		140
Upper Nozzle Gap		0.2	0.2	0.2	0.2	0.2		0.2
Lower Nozzle Gap		0.2	0.2	0.2	0.2	0.2		0.2
Liquid Quantity	（KΩ-㎝）	50~55	50~55	50~55	50~55	50~55		50~55
OFFSET No	（D）	00	01	02	03	04		00
Rough cut		0.173	---------	---------	---------	---------		0.175
Rough cut&1 Skim		0.202	0.129	---------	---------	---------		---------
Rough cut&2 Skim		0.210	0.144	0.124	---------	---------		---------
Rough cut&3 Skim		0.220	0.150	0.130	0.122	---------		---------
Rough cut&4 Skim		0.221	0.151	0.131	0.123	0.122		---------
OFFSET Difference		---------	0.070	0.020	0.008	0.001		---------
RESULTS								
Cutting Feed Rate（㎜/min）		7.2~8.4	9.6~10.8	12.0~13.6	15.0~16.8	15.0~16.8		8.4~9.6
Gap Voltage（GV）		57~63	70~75	70~80	65~75	65~75		58~65
Finish Surface	μmRmax	15~18	7~9	5~7	4~6	3~5		17~20
Roughness	μmRa	2.8	1.4	1.1	0.9	0.58		3.0

Property of Kent USA
Do Not Reproduce

WCUT Machning Data Sheet

Wire Dia. and Type	Material Type	Material Thickness
0.20 ㎜ Brass	Aluminium	30 ㎜

Cutting Process		Stable Rough cut	Skim1	Skim2	Skim3	Skim4		Max Rough cut
EDM Number	NO							
ON TIME	T.ON	14	6	4	2	1		16
OFF TIME	T.OFF	12	13	13	11	11		12
ARC ON	A.ON	12	4	2	1	1		14
ARC OFF	A.OFF	14	15	15	13	11		14
Servo Voltage	S.V	45	55	55	50	50		45
Wire Tension	W.T	6	8	8	9	10		6
Wire Feed	W.F	9	10	10	10	10		9
Water Flow Rate	W.F.R	7	0	0	0	0		7
G94F	FEED	4.0	6.0	8.0	10.0	10.0		4.0
FEED%	F.R	150	150	150	150	120		170
Upper Nozzle Gap		0.2	0.2	0.2	0.2	0.2		0.2
Lower Nozzle Gap		0.2	0.2	0.2	0.2	0.2		0.2
Liquid Quantity	（KΩ-cm）	50~55	50~55	50~55	50~55	50~55		50~55
OFFSET No	（D）	00	01	02	03	04		00
Rough cut		0.178	---------	---------	---------	---------		0.180
Rough cut&1 Skim		0.205	0.132	---------	---------	---------		---------
Rough cut&2 Skim		0.215	0.145	0.127	---------	---------		---------
Rough cut&3 Skim		0.225	0.152	0.132	0.124	---------		---------
Rough cut&4 Skim		0.226	0.153	0.133	0.125	0.124		---------
OFFSET Difference		---------	0.073	0.020	0.008	0.001		---------
RESULTS								
Cutting Feed Rate（㎜/min）		6.0~6.8	9.0~10.3	12.0~13.6	15.0~16.0	15.0~16.0		6.8~7.6
Gap Voltage（GV）		52~60	65~75	70~75	60~70	60~70		58~65
Finish Surface	μmRmax	15~18	7~9	5~7	4~6	3~5		17~20
Roughness	μmRa	2.8	1.4	1.1	0.9	0.59		3.0

Property of Kent USA
Do Not Reproduce

WCUT Machning Data Sheet

Wire Dia. and Type	Material Type	Material Thickness
0.20 ㎜ Brass	Aluminium	40 ㎜

Cutting Process		Stable Rough cut	Skim1	Skim2	Skim3	Skim4		Max Rough cut
EDM Number	NO							
ON TIME	T.ON	14	6	4	2	1		16
OFF TIME	T.OFF	12	12	11	10	11		12
ARC ON	A.ON	12	4	2	1	1		14
ARC OFF	A.OFF	14	14	13	12	11		14
Servo Voltage	S.V	45	55	55	50	50		45
Wire Tension	W.T	6	9	10	10	11		5
Wire Feed	W.F	9	11	11	11	11		9
Water Flow Rate	W.F.R	7	0	0	0	0		7
G94F	FEED	3.0	4.5	6.0	7.5	7.5		3.0
FEED%	F.R	150	150	150	150	150		170
Upper Nozzle Gap		0.2	0.2	0.2	0.2	0.2		0.2
Lower Nozzle Gap		0.2	0.2	0.2	0.2	0.2		0.2
Liquid Quantity	（KΩ-cm）	50~55	50~55	50~55	50~55	50~55		50~55
OFFSET No	（D）	00	01	02	03	04		00
Rough cut		0.182	---------	---------	---------	---------		0.184
Rough cut&1 Skim		0.220	0.134	---------	---------	---------		---------
Rough cut&2 Skim		0.235	0.150	0.128	---------	---------		---------
Rough cut&3 Skim		0.245	0.155	0.132	0.125	---------		---------
Rough cut&4 Skim		0.255	0.156	0.133	0.126	0.125		---------
OFFSET Difference		---------	0.090	0.023	0.007	0.001		---------
RESULTS								
Cutting Feed Rate（㎜/min）		4.5~4.9	6.7~7.3	9.0~10.0	11.0~12.5	11.0~12.5		4.7~5.2
Gap Voltage（GV）		51~59	60~70	60~70	57~68	57~68		55~65
Finish Surface	μmRmax	15~18	7~9	5~7	4~6	3~5		17~20
Roughness	μmRa	2.8	1.4	1.1	0.9	0.6		3.0

Property of Kent USA
Do Not Reproduce

WCUT Machning Data Sheet

Wire Dia. and Type	Material Type	Material Thickness
0.20 ㎜ Brass	Aluminium	50 ㎜

Cutting Process		Stable Rough cut	Skim1	Skim2	Skim3	Skim4		Max Rough cut
EDM Number	NO							
ON TIME	T.ON	14	6	4	2	1		16
OFF TIME	T.OFF	12	12	11	10	11		12
ARC ON	A.ON	12	4	2	1	1		14
ARC OFF	A.OFF	14	14	13	12	11		14
Servo Voltage	S.V	40	55	55	50	50		45
Wire Tension	W.T	6	9	10	10	11		6
Wire Feed	W.F	9	11	11	11	11		9
Water Flow Rate	W.F.R	7	0	0	0	0		7
G94F	FEED	2.5	3.6	4.8	6.0	6.0		2.5
FEED%	F.R	150	150	150	150	150		170
Upper Nozzle Gap		0.2	0.2	0.2	0.2	0.2		0.2
Lower Nozzle Gap		0.2	0.2	0.2	0.2	0.2		0.2
Liquid Quantity	（KΩ-㎝）	55~60	55~60	55~60	55~60	55~60		55~60
OFFSET No	（D）	00	01	02	03	04		00
Rough cut		0.186	---------	---------	---------	---------		0.189
Rough cut&1 Skim		0.230	0.136	---------	---------	---------		---------
Rough cut&2 Skim		0.235	0.155	0.130	---------	---------		---------
Rough cut&3 Skim		0.240	0.157	0.132	0.127	---------		---------
Rough cut&4 Skim		0.241	0.158	0.133	0.128	0.127		---------
OFFSET Difference		---------	0.083	0.025	0.005	0.001		---------
RESULTS								
Cutting Feed Rate（㎜/min）		3.75~4.25	5.4~6.2	7.2~8.0	8.4~9.4	8.4~9.4		4.25~4.80
Gap Voltage（GV）		48~58	65~75	65~75	55~65	55~65		48~59
Finish Surface	μmRmax	15~18	7~9	5~7	4~6	3~5		17~20
Roughness	μmRa	2.8	1.4	1.1	0.9	0.57		3.0

Property of Kent USA
Do Not Reproduce

WCUT Machning Data Sheet

Wire Dia. and Type	Material Type	Material Thickness
0.20 ㎜ Brass	Aluminium	60 ㎜

Cutting Process		Stable Rough cut	Skim1	Skim2	Skim3	Skim4		Max Rough cut
EDM Number	NO							
ON TIME	T.ON	14	6	4	2	1		16
OFF TIME	T.OFF	11	12	11	10	11		11
ARC ON	A.ON	12	4	2	1	1		14
ARC OFF	A.OFF	13	14	13	12	11		13
Servo Voltage	S.V	40	55	55	50	50		45
Wire Tension	W.T	6	9	10	10	11		6
Wire Feed	W.F	9	11	11	11	11		9
Water Flow Rate	W.F.R	7	0	0	0	0		7
G94F	FEED	2.5	3.6	4.8	6.0	6.0		2.5
FEED%	F.R	120	120	120	120	120		140
Upper Nozzle Gap		0.2	0.2	0.2	0.2	0.2		0.2
Lower Nozzle Gap		0.2	0.2	0.2	0.2	0.2		0.2
Liquid Quantity	（KΩ-cm）	50~55	50~55	50~55	50~55	50~55		50~55
OFFSET No	（D）	00	01	02	03	04		00
Rough cut		0.188	---------	---------	---------	---------		0.190
Rough cut&1 Skim		0.232	0.138	---------	---------	---------		---------
Rough cut&2 Skim		0.236	0.155	0.131	---------	---------		---------
Rough cut&3 Skim		0.242	0.158	0.134	0.129	---------		---------
Rough cut&4 Skim		0.243	0.159	0.135	0.130	0.129		---------
OFFSET Difference		---------	0.084	0.024	0.005	0.001		---------
RESULTS								
Cutting Feed Rate（㎜/min）		3.0~3.2	4.2~4.5	5.7~5.9	7.2~7.5	7.2~7.5		3.5~3.6
Gap Voltage（GV）		45~55	63~75	65~75	59~70	59~70		48~60
Finish Surface	μmRmax	15~18	7~9	5~7	4~6	3~5		17~20
Roughness	μmRa	2.8	1.4	1.1	0.9	0.58		3.0

Property of Kent USA
Do Not Reproduce

WCUT Machning Data Sheet

Wire Dia. and Type	Material Type	Material Thickness
0.20 ㎜ Brass	Aluminium	70 ㎜

Cutting Process		Stable Rough cut	Skim1	Skim2	Skim3			Max Rough cut
EDM Number	NO							
ON TIME	T.ON	14	6	4	2			16
OFF TIME	T.OFF	11	12	11	10			12
ARC ON	A.ON	12	14	2	1			14
ARC OFF	A.OFF	13	14	13	12			14
Servo Voltage	S.V	40	50	50	45			45
Wire Tension	W.T	6	10	10	10			6
Wire Feed	W.F	10	11	11	11			10
Water Flow Rate	W.F.R	7	0	0	0			7
G94F	FEED	2.0	3.0	4.0	5.0			2.0
FEED%	F.R	120	120	120	120			130
Upper Nozzle Gap		0.2	0.2	0.2	0.2			0.2
Lower Nozzle Gap		0.2	0.2	0.2	0.2			0.2
Liquid Quantity （KΩ-㎝）		55~60	55~60	55~60	55~60			55~60
OFFSET No （D）		00	01	02	03			00
Rough cut		0.190	---------	---------	---------			0.192
Rough cut&1 Skim		0.233	0.139	---------	---------			---------
Rough cut&2 Skim		0.238	0.156	0.132	---------			---------
Rough cut&3 Skim		0.243	0.160	0.135	0.130			---------
OFFSET Difference		---------	0.083	0.025	0.005			---------
RESULTS								
Cutting Feed Rate（㎜/min）		2.4~2.6	3.6~3.9	4.8~5.0	6.0~6.4			2.6~2.8
Gap Voltage（GV）		47~56	58~69	60~70	55~67			49~60
Finish Surface	μmRmax	15~18	7~9	5~7	4~6			17~20
Roughness	μmRa	2.8	1.4	1.1	0.9			3.0

Property of Kent USA
Do Not Reproduce

WCUT Machning Data Sheet

Wire Dia. and Type	Material Type	Material Thickness
0.20 ㎜ Brass	Aluminium	80 ㎜

Cutting Process		Stable Rough cut	Skim1	Skim2	Skim3			Max Rough cut
EDM Number	NO							
ON TIME	T.ON	14	6	4	2			16
OFF TIME	T.OFF	11	12	11	10			11
ARC ON	A.ON	12	4	3	2			14
ARC OFF	A.OFF	13	14	13	12			13
Servo Voltage	S.V	40	50	50	45			40
Wire Tension	W.T	7	11	11	12			7
Wire Feed	W.F	10	11	11	11			11
Water Flow Rate	W.F.R	7	0	0	0			7
G94F	FEED	2.0	3.0	4.0	5.0			2.2
FEED%	F.R	100	100	100	100			100
Upper Nozzle Gap		0.2	0.2	0.2	0.2			0.2
Lower Nozzle Gap		0.2	0.2	0.2	0.2			0.2
Liquid Quantity （KΩ-㎝）		55~60	55~60	55~60	55~60			55~60
OFFSET No （D）		00	01	02	03			00
Rough cut		0.191	---------	---------	---------			0.193
Rough cut&1 Skim		0.235	0.139	---------	---------			---------
Rough cut&2 Skim		0.239	0.156	0.133	---------			---------
Rough cut&3 Skim		0.245	0.162	0.136	0.131			---------
OFFSET Difference		---------	0.083	0.026	0.005			---------
RESULTS								
Cutting Feed Rate（㎜/min）		2.0~2.1	3.0~3.4	4.0~4.5	5.0~5.6			2.2~2.3
Gap Voltage（GV）		46~55	55~68	60~70	58~69			46~59
Finish Surface	μmRmax	15~18	7~9	5~7	4~6			17~20
Roughness	μmRa	2.8	1.4	1.1	0.9			3.0

Property of Kent USA
Do Not Reproduce

WCUT Machning Data Sheet

Wire Dia. and Type	Material Type	Material Thickness
0.20 ㎜ Brass	Aluminium	90 ㎜

Cutting Process		Stable Rough cut	Skim1	Skim2	Skim3			Max Rough cut
EDM Number	NO							
ON TIME	T.ON	14	6	4	2			16
OFF TIME	T.OFF	11	11	11	10			11
ARC ON	A.ON	12	4	3	2			14
ARC OFF	A.OFF	13	13	13	12			13
Servo Voltage	S.V	40	45	45	40			40
Wire Tension	W.T	7	11	11	12			7
Wire Feed	W.F	10	11	11	11			11
Water Flow Rate	W.F.R	7	0	0	0			7
G94F	FEED	1.2	2.0	2.4	3.0			1.4
FEED%	F.R	140	140	140	140			140
Upper Nozzle Gap		0.2	0.2	0.2	0.2			0.2
Lower Nozzle Gap		0.2	0.2	0.2	0.2			0.2
Liquid Quantity （KΩ-㎝）		55~60	55~60	55~60	55~60			55~60
OFFSET No （D）		00	01	02	03			00
Rough cut		0.193	---------	---------	---------			0.194
Rough cut&1 Skim		0.236	0.141	---------	---------			---------
Rough cut&2 Skim		0.240	0.156	0.134	---------			---------
Rough cut&3 Skim		0.247	0.163	0.137	0.132			---------
OFFSET Difference		---------	0.084	0.026	0.005			---------
RESULTS								
Cutting Feed Rate（㎜/min）		1.68~1.74	2.78~2.86	3.36~3.48	4.20~4.40			1.94~2.04
Gap Voltage（GV）		46~55	58~69	60~70	48~56			44~57
Finish Surface	μmRmax	15~18	7~9	5~7	4~6			17~20
Roughness	μmRa	2.8	1.4	1.1	0.9			3.0

Property of Kent USA
Do Not Reproduce

WCUT Machning Data Sheet

Wire Dia. and Type	Material Type	Material Thickness
0.20 ㎜ Brass	Aluminium	100 ㎜

Cutting Process		Stable Rough cut	Skim1	Skim2	Skim3			Max Rough cut
EDM Number	NO							
ON TIME	T.ON	14	6	4	2			16
OFF TIME	T.OFF	11	11	11	9			11
ARC ON	A.ON	12	4	3	2			14
ARC OFF	A.OFF	13	13	13	11			13
Servo Voltage	S.V	40	45	45	40			40
Wire Tension	W.T	7	11	11	12			7
Wire Feed	W.F	11	12	12	12			12
Water Flow Rate	W.F.R	7	0	0	0			7
G94F	FEED	1.0	1.6	1.8	2.0			1.1
FEED%	F.R	150	150	150	150			150
Upper Nozzle Gap		0.2	0.2	0.2	0.2			0.2
Lower Nozzle Gap		0.2	0.2	0.2	0.2			0.2
Liquid Quantity （KΩ-㎝）		55~60	55~60	55~60	55~60			55~60
OFFSET No （D）		00	01	02	03			00
Rough cut		0.193	---------	---------	---------			
Rough cut&1 Skim		0.237	0.141	---------	---------			---------
Rough cut&2 Skim		0.240	0.158	0.136	---------			---------
Rough cut&3 Skim		0.247	0.164	0.139	0.134			---------
OFFSET Difference		---------	0.083	0.025	0.005			---------
RESULTS								
Cutting Feed Rate（㎜/min）		1.50~1.53	2.40~2.46	2.70~2.78	3.00~3.04			1.63~1.67
Gap Voltage（GV）		43~56	55~68	58~70	46~59			44~55
Finish Surface	μmRmax	15~18	7~9	5~7	4~6			17~20
Roughness	μmRa	2.8	1.4	1.1	0.9			3.0

Property of Kent USA
Do Not Reproduce

WCUT Machning Data Sheet

Wire Dia. and Type	Material Type	Material Thickness
0.25 ㎜ Brass	Steel（SKD11）	10 ㎜

Cutting Process		Stable Rough cut	Skim1	Skim2	Skim3	Skim4		Max Rough cut
EDM Number	NO							
ON TIME	T.ON	16	6	4	2	1		16
OFF TIME	T.OFF	12	13	15	13	11		10
ARC ON	A.ON	14	4	2	1	1		16
ARC OFF	A.OFF	14	15	17	15	11		12
Servo Voltage	S.V	30	40	45	50	50		30
Wire Tension	W.T	8	11	11	11	11		8
Wire Feed	W.F	11	10	10	10	10		11
Water Flow Rate	W.F.R	7	0	0	0	0		7
G94F	FEED	7.5	10.0	10	12	12.0		7.5
FEED%	F.R	130	120	140	140	140		145
Upper Nozzle Gap		0.2	0.2	0.2	0.2	0.2		0.2
Lower Nozzle Gap		0.2	0.2	0.2	0.2	0.2		0.2
Liquid Quantity （KΩ-㎝）		55~60	55~60	55~60	55~60	55~60		55~60
OFFSET No （D）		00	01	02	03	04		00
Rough cut		0.161	---------	---------	---------	---------		0.160
Rough cut&1 Skim		0.205	0.142	---------	---------	---------		---------
Rough cut&2 Skim		0.210	0.145	0.141	---------	---------		---------
Rough cut&3 Skim		0.213	0.149	0.144	0.140	---------		---------
Rough cut&4 Skim		0.214	0.150	0.145	0.141	0.140		---------
OFFSET Difference		---------	0.061	0.005	0.004	0.001		---------
RESULTS								
Cutting Feed Rate（㎜/min）		9.5~11.5	11.0~13.0	12.0~14.0	12.0~14.0	12.0~14.0		10.5~12.5
Gap Voltage（GV）		40~48	50~60	55~65	70~80	70~80		48~58
Finish Surface	μmRmax	15~18	7~9	5~7	4~6	3~5		17~20
Roughness	μmRa	2.8	1.4	1.1	0.9	0.55		3.0

Property of Kent USA
Do Not Reproduce

WCUT Machning Data Sheet

Wire Dia. and Type	Material Type	Material Thickness
0.25 ㎜ Brass	Steel（SKD11）	20 ㎜

Cutting Process		Stable Rough cut	Skim1	Skim2	Skim3	Skim4		Max Rough cut
EDM Number	NO							
ON TIME	T.ON	16	6	4	2	1		18
OFF TIME	T.OFF	8	12	12	12	11		8
ARC ON	A.ON	14	4	2	1	1		16
ARC OFF	A.OFF	10	14	14	14	11		10
Servo Voltage	S.V	30	45	50	50	50		28
Wire Tension	W.T	8	11	12	12	12		8
Wire Feed	W.F	11	10	11	10	10		11
Water Flow Rate	W.F.R	7	0	0	0	0		7
G94F	FEED	4.5	6	7	12	12.0		4.5
FEED%	F.R	140	150	150	120	120		170
Upper Nozzle Gap		0.2	0.2	0.2	0.2	0.2		0.2
Lower Nozzle Gap		0.2	0.2	0.2	0.2	0.2		0.2
Liquid Quantity	（KΩ-㎝）	55~65	55~65	55~65	55~65	55~65		55~65
OFFSET No	（D）	00	01	02	03	04		00
Rough cut		0.163	---------	---------	---------	---------		0.160
Rough cut&1 Skim		0.205	0.139	---------	---------	---------		---------
Rough cut&2 Skim		0.215	0.143	0.140	---------	---------		---------
Rough cut&3 Skim		0.219	0.148	0.143	0.141	---------		---------
Rough cut&4 Skim		0.220	0.149	0.144	0.142	0.141		---------
OFFSET Difference		---------	0.071	0.005	0.002	0.001		---------
RESULTS								
Cutting Feed Rate（㎜/min）		6.0~7.5	9.0~11.0	11.0~13.0	10.0~12.0	10.0~12.0		7.5~8.0
Gap Voltage（GV）		38~45	45~55	50~65	50~65	50~65		38~45
Finish Surface	μmRmax	15~18	7~9	5~7	4~6	3~5		17~20
Roughness	μmRa	2.8	1.4	1.1	0.9	0.57		3.0

Property of Kent USA
Do Not Reproduce

WCUT Machning Data Sheet

Wire Dia. and Type	Material Type	Material Thickness
0.25 ㎜ Brass	Steel（SKD11）	30 ㎜

Cutting Process		Stable Rough cut	Skim1	Skim2	Skim3	Skim4		Max Rough cut
EDM Number	NO							
ON TIME	T.ON	16	6	4	2	1		18
OFF TIME	T.OFF	9	13	15	11	11		9
ARC ON	A.ON	14	4	2	1	1		16
ARC OFF	A.OFF	11	15	17	13	11		11
Servo Voltage	S.V	30	40	45	45	50		26
Wire Tension	W.T	8	11	11	11	11		8
Wire Feed	W.F	10	10	10	10	10		10
Water Flow Rate	W.F.R	7	0	0	0	0		7
G94F	FEED	3.0	7.5	9.0	9.0	9.0		3.0
FEED%	F.R	160	100	100	100	100		180
Upper Nozzle Gap		0.2	0.2	0.2	0.2	0.2		0.2
Lower Nozzle Gap		0.2	0.2	0.2	0.2	0.2		0.2
Liquid Quantity	（KΩ-㎝）	50~60	50~60	50~60	50~60	50~60		50~60
OFFSET No	（D）	00	01	02	03	04		00
Rough cut		0.166	---------	---------	---------	---------		0.167
Rough cut&1 Skim		0.205	0.140	---------	---------	---------		---------
Rough cut&2 Skim		0.216	0.150	0.144	---------	---------		---------
Rough cut&3 Skim		0.220	0.156	0.149	0.147	---------		---------
Rough cut&4 Skim		0.221	0.157	0.150	0.148	0.147		---------
OFFSET Difference		---------	0.064	0.007	0.002	0.001		----------
RESULTS								
Cutting Feed Rate（㎜/min）		4.3~5.0	7.2~8.2	8.5~9.6	8.5~9.6	8.5~9.6		4.5~5.8
Gap Voltage（GV）		40~50	50~60	52~63	53~64	53~64		35~45
Finish Surface	μmRmax	15~18	7~9	5~7	4~6	3~5		17~20
Roughness	μmRa	2.8	1.4	1.1	0.9	0.57		3.0

Property of Kent USA
Do Not Reproduce

WCUT Machning Data Sheet

Wire Dia. and Type	Material Type	Material Thickness
0.25 ㎜ Brass	Steel（SKD11）	40 ㎜

Cutting Process		Stable Rough cut	Skim1	Skim2	Skim3	Skim4		Max Rough cut
EDM Number	NO							
ON TIME	T.ON	16	6	4	2	1		18
OFF TIME	T.OFF	9	13	15	11	11		9
ARC ON	A.ON	14	4	2	1	1		16
ARC OFF	A.OFF	11	15	17	13	11		11
Servo Voltage	S.V	26	40	45	45	50		26
Wire Tension	W.T	8	11	11	11	11		8
Wire Feed	W.F	10	10	10	10	10		10
Water Flow Rate	W.F.R	7	0	0	0	0		7
G94F	FEED	2.5	6.0	8.5	8.5	8.5		2.5
FEED%	F.R	130	110	110	110	110		160
Upper Nozzle Gap		0.2	0.2	0.2	0.2	0.2		0.2
Lower Nozzle Gap		0.2	0.2	0.2	0.2	0.2		0.2
Liquid Quantity （KΩ-cm）		50~62	50~62	50~62	50~62	50~62		50~62
OFFSET No （D）		00	01	02	03	04		00
Rough cut		0.167	---------	---------	---------	---------		0.168
Rough cut&1 Skim		0.206	0.142	---------	---------	---------		---------
Rough cut&2 Skim		0.217	0.151	0.145	---------	---------		---------
Rough cut&3 Skim		0.222	0.157	0.150	0.148	---------		---------
Rough cut&4 Skim		0.223	0.128	0.151	0.149	0.148		---------
OFFSET Difference		---------	0.0065	0.007	0.002	0.001		---------
RESULTS								
Cutting Feed Rate（㎜/min）		3.0~3.5	6.8~7.5	8.9~9.5	8.9~9.5	8.9~9.5		3.9~4.3
Gap Voltage（GV）		38~46	45~54	60~70	60~70	60~70		38~46
Finish Surface	μmRmax	15~18	7~9	5~7	4~6	3~5		17~20
Roughness	μmRa	2.8	1.4	1.1	0.9	0.59		3.0

Property of Kent USA
Do Not Reproduce

WCUT Machning Data Sheet

Wire Dia. and Type	Material Type	Material Thickness
0.25 ㎜ Brass	Steel（SKD11）	50 ㎜

Cutting Process		Stable Rough cut	Skim1	Skim2	Skim3	Skim4		Max Rough cut
EDM Number	NO							
ON TIME	T.ON	16	6	4	2	1		18
OFF TIME	T.OFF	8	13	13	10	11		10
ARC ON	A.ON	14	4	2	1	1		16
ARC OFF	A.OFF	10	15	15	11	11		11
Servo Voltage	S.V	28	40	45	45	50		28
Wire Tension	W.T	8	12	12	12	12		8
Wire Feed	W.F	10	10	11	11	11		10
Water Flow Rate	W.F.R	7	0	0	0	0		7
G94F	FEED	1.8	3	4	5	5.0		1.7
FEED%	F.R	160	150	150	150	150		180
Upper Nozzle Gap		0.2	0.2	0.2	0.2	0.2		0.2
Lower Nozzle Gap		0.2	0.2	0.2	0.2	0.2		0.2
Liquid Quantity	（KΩ-㎝）	55~60	55~60	55~60	55~60	55~60		55~60
OFFSET No	（D）	00	01	02	03	04		00
Rough cut		0.170	---------	---------	---------	---------		0.171
Rough cut&1 Skim		0.210	0.143	---------	---------	---------		---------
Rough cut&2 Skim		0.218	0.150	0.144	---------	---------		---------
Rough cut&3 Skim		0.224	0.158	0.151	0.149	---------		---------
Rough cut&4 Skim		0.225	0.159	0.152	0.150	0.149		---------
OFFSET Difference		---------	0.066	0.007	0.002	0.001		---------
RESULTS								
Cutting Feed Rate（㎜/min）		2.66~2.80	4.3~5.2	5.5~6.3	7.2~7.9	7.2~7.9		2.9~3.3
Gap Voltage（GV）		44~51	54~62	65~73	65~73	65~73		35~45
Finish Surface	μmRmax	15~18	7~9	5~7	4~6	3~5		17~20
Roughness	μmRa	2.8	1.4	1.1	0.9	0.58		3.0

Property of Kent USA
Do Not Reproduce

WCUT Machning Data Sheet

Wire Dia. and Type	Material Type	Material Thickness
0.25 ㎜ Brass	Steel（SKD11）	60 ㎜

Cutting Process		Stable Rough cut	Skim1	Skim2	Skim3			Max Rough cut
EDM Number	NO							
ON TIME	T.ON	16	6	4	2			18
OFF TIME	T.OFF	8	13	14	9			9
ARC ON	A.ON	14	4	2	1			16
ARC OFF	A.OFF	10	15	16	11			11
Servo Voltage	S.V	28	40	45	45			30
Wire Tension	W.T	8	11	12	12			8
Wire Feed	W.F	10	10	10	11			11
Water Flow Rate	W.F.R	7	0	0	0			7
G94F	FEED	1.5	2.0	3.0	3.2			1.6
FEED%	F.R	160	160	130	130			160
Upper Nozzle Gap		0.2	0.2	0.2	0.2			0.2
Lower Nozzle Gap		0.2	0.2	0.2	0.2			0.2
Liquid Quantity （KΩ-㎝）		40~55	40~55	40~55	40~55			40~55
OFFSET No （D）		00	01	02	03			00
Rough cut		0.172	---------	---------	---------			0.173
Rough cut&1 Skim		0.214	0.145	---------	---------			---------
Rough cut&2 Skim		0.221	0.152	0.146	---------			---------
Rough cut&3 Skim		0.226	0.159	0.153	0.150			---------
OFFSET Difference		---------	0.067	0.006	0.003			---------
RESULTS								
Cutting Feed Rate（㎜/min）		2.15~2.35	3.0~3.6	3.75~3.96	4.10~4.42			2.45~2.60
Gap Voltage（GV）		36~46	46~54	50~59	60~68			40~47
Finish Surface	μmRmax	15~18	7~9	5~7	4~6			17~20
Roughness	μmRa	2.8	1.4	1.1	0.9			3.0

Property of Kent USA
Do Not Reproduce

WCUT Machning Data Sheet

Wire Dia. and Type	Material Type	Material Thickness
0.25 ㎜ Brass	Steel（SKD11）	70 ㎜

Cutting Process		Stable Rough cut	Skim1	Skim2	Skim3			Max Rough cut
EDM Number	NO							
ON TIME	T.ON	16	6	4	2			18
OFF TIME	T.OFF	8	12	12	10			8
ARC ON	A.ON	14	4	2	1			16
ARC OFF	A.OFF	9	14	14	11			10
Servo Voltage	S.V	30	40	43	43			28
Wire Tension	W.T	9	11	11	12			9
Wire Feed	W.F	11	11	11	11			11
Water Flow Rate	W.F.R	7	0	0	0			7
G94F	FEED	1.3	2.0	2.8	3.0			1.4
FEED%	F.R	160	140	150	150			170
Upper Nozzle Gap		0.2	0.2	0.2	0.2			0.2
Lower Nozzle Gap		0.2	0.2	0.2	0.2			0.2
Liquid Quantity （KΩ-㎝）		50~55	50~55	50~55	50~55			50~55
OFFSET No （D）		00	01	02	03			00
Rough cut		0.173	---------	---------	---------			0.174
Rough cut&1 Skim		0.216	0.147	---------	---------			---------
Rough cut&2 Skim		0.223	0.158	0.148	---------			---------
Rough cut&3 Skim		0.227	0.160	0.155	0.151			---------
OFFSET Difference		---------	0.067	0.005	0.004			---------
RESULTS								
Cutting Feed Rate（㎜/min）		2.0~2.33	2.75~2.88	4.1~4.5	4.4~4.7			2.33~2.56
Gap Voltage（GV）		38~45	50~55	50~55	54~60			41~48
Finish Surface	μmRmax	15~18	7~9	5~7	4~6			17~20
Roughness	μmRa	2.8	1.4	1.1	0.9			3.0

Property of Kent USA
Do Not Reproduce

WCUT Machning Data Sheet

Wire Dia. and Type	Material Type	Material Thickness
0.25 ㎜ Brass	Steel（SKD11）	80 ㎜

Cutting Process		Stable Rough cut	Skim1	Skim2	Skim3			Max Rough cut
EDM Number	NO							
ON TIME	T.ON	16	6	4	2			18
OFF TIME	T.OFF	8	12	12	10			8
ARC ON	A.ON	14	4	2	1			16
ARC OFF	A.OFF	9	14	14	11			10
Servo Voltage	S.V	30	40	43	43			28
Wire Tension	W.T	9	11	11	12			9
Wire Feed	W.F	11	11	11	11			11
Water Flow Rate	W.F.R	7	0	0	0			7
G94F	FEED	1.1	1.6	2.2	2.2			1.2
FEED%	F.R	160	160	160	160			190
Upper Nozzle Gap		0.2	0.2	0.2	0.2			0.2
Lower Nozzle Gap		0.2	0.2	0.2	0.2			0.2
Liquid Quantity （KΩ-㎝）		50~55	50~55	50~55	50~55			50~55
OFFSET No （D）		00	01	02	03			00
Rough cut		0.175	---------	---------	---------			0.176
Rough cut&1 Skim		0.217	0.148	---------	---------			---------
Rough cut&2 Skim		0.224	0.160	0.150	---------			---------
Rough cut&3 Skim		0.228	0.167	0.156	0.152			---------
OFFSET Difference		---------	0.061	0.011	0.004			---------
RESULTS								
Cutting Feed Rate（㎜/min）		1.73~1.78	2.53~2.58	3.49~3.55	3.51~3.66			2.03~2.38
Gap Voltage（GV）		34~44	45~53	47~55	50~59			37~46
Finish Surface	μmRmax	15~18	7~9	5~7	4~6			17~20
Roughness	μmRa	2.8	1.4	1.1	0.9			3.0

Property of Kent USA
Do Not Reproduce

WCUT Machning Data Sheet

Wire Dia. and Type	Material Type	Material Thickness
0.25 ㎜ Brass	Steel（SKD11）	90 ㎜

Cutting Process		Stable Rough cut	Skim1	Skim2	Skim3			Max Rough cut
EDM Number	NO							
ON TIME	T.ON	16	6	4	2			18
OFF TIME	T.OFF	8	12	10	9			8
ARC ON	A.ON	14	4	3	2			16
ARC OFF	A.OFF	10	14	12	10			10
Servo Voltage	S.V	26	40	40	40			26
Wire Tension	W.T	8	11	12	12			7
Wire Feed	W.F	11	12	12	12			11
Water Flow Rate	W.F.R	7	0	0	0			7
G94F	FEED	0.9	1.6	2.1	2.1			1.2
FEED%	F.R	150	140	140	140			130
Upper Nozzle Gap		0.2	0.2	0.2	0.2			0.2
Lower Nozzle Gap		0.2	0.2	0.2	0.2			0.2
Liquid Quantity （KΩ-㎝）		55~60	55~60	55~60	55~60			55~60
OFFSET No （D）		00	01	02	03			00
Rough cut		0.180	---------	---------	---------			---------
Rough cut&1 Skim		0.222	0.149	---------	---------			---------
Rough cut&2 Skim		0.231	0.164	0.151	---------			---------
Rough cut&3 Skim		0.236	0.168	0.155	0.152			---------
OFFSET Difference		---------	0.066	0.013	0.003			---------
RESULTS								
Cutting Feed Rate（㎜/min）		1.33~1.36	2.14~2.36	2.83~3.09	2.85~3.12			1.34~1.38
Gap Voltage（GV）		33~42	45~53	45~52	50~56			34~40
Finish Surface	μmRmax	15~18	7~9	5~7	4~6			17~20
Roughness	μmRa	2.8	1.4	1.1	0.9			3.0

Property of Kent USA
Do Not Reproduce

WCUT Machning Data Sheet

Wire Dia. and Type	Material Type	Material Thickness
0.25 ㎜ Brass	Steel（SKD11）	100 ㎜

Cutting Process		Stable Rough cut	Skim1	Skim2	Skim3			Max Rough cut
EDM Number	NO							
ON TIME	T.ON	16	6	4	2			18
OFF TIME	T.OFF	8	12	10	9			8
ARC ON	A.ON	14	4	3	2			16
ARC OFF	A.OFF	10	14	12	10			10
Servo Voltage	S.V	26	40	40	40			26
Wire Tension	W.T	8	12	12	12			7
Wire Feed	W.F	11	12	12	12			12
Water Flow Rate	W.F.R	7	0	0	0			7
G94F	FEED	0.8	1.4	1.8	1.8			1.0
FEED%	F.R	140	140	140	140			120
Upper Nozzle Gap		0.2	0.2	0.2	0.2			0.2
Lower Nozzle Gap		0.2	0.2	0.2	0.2			0.2
Liquid Quantity （KΩ-㎝）		55~60	55~60	55~60	55~60			55~60
OFFSET No （D）		00	01	02	03			00
Rough cut		0.183	---------	---------	---------			0.185
Rough cut&1 Skim		0.225	0.150	---------	---------			---------
Rough cut&2 Skim		0.234	0.165	0.152	---------			---------
Rough cut&3 Skim		0.237	0.169	0.156	0.152			---------
OFFSET Difference		---------	0.068	0.013	0.004			---------
RESULTS								
Cutting Feed Rate（㎜/min）		1.10~1.25	1.93~2.03	2.49~2.53	2.50~2.56			1.19~1.34
Gap Voltage（GV）		32~45	43~52	45~53	46~55			33~43
Finish Surface	μmRmax	15~18	7~9	5~7	4~6			17~20
Roughness	μmRa	2.8	1.4	1.1	0.9			3.0

Property of Kent USA
Do Not Reproduce

WCUT Machning Data Sheet

Wire Dia. and Type	Material Type	Material Thickness
0.25 ㎜ Brass	Steel（SKD11）	125 ㎜

Cutting Process		Stable Rough cut	Skim1	Skim2	Skim3			Max Rough cut
EDM Number	NO							
ON TIME	T.ON	16	6	4	3			18
OFF TIME	T.OFF	8	11	9	8			8
ARC ON	A.ON	14	4	3	2			16
ARC OFF	A.OFF	8	12	10	8			9
Servo Voltage	S.V	26	40	40	40			26
Wire Tension	W.T	7	11	12	12			7
Wire Feed	W.F	12	12	12	12			12
Water Flow Rate	W.F.R	7	0	0	0			7
G94F	FEED	0.8	1.4	1.8	1.8			0.9
FEED%	F.R	100	100	100	100			100
Upper Nozzle Gap		0.2	0.2	0.2	0.2			0.2
Lower Nozzle Gap		0.2	0.2	0.2	0.2			0.2
Liquid Quantity （KΩ-㎝）		55~60	55~60	55~60	55~60			55~60
OFFSET No （D）		00	01	02	03			00
Rough cut		0.186	---------	---------	---------			0.188
Rough cut&1 Skim		0.230	0.153	---------	---------			---------
Rough cut&2 Skim		0.239	0.168	0.153	---------			---------
Rough cut&3 Skim		0.242	0.170	0.157	0.154			---------
OFFSET Difference		---------	0.072	0.013	0.003			---------
RESULTS								
Cutting Feed Rate（㎜/min）		0.77~0.81	1.38~1.43	1.79~1.82	1.81~1.86			0.88~0.94
Gap Voltage（GV）		31~44	43~51	44~53	46~55			32~43
Finish Surface	μmRmax	15~18	7~9	5~7	4~6			17~20
Roughness	μmRa	2.8	1.4	1.1	0.9			3.0

Property of Kent USA
Do Not Reproduce

WCUT Machning Data Sheet

Wire Dia. and Type	Material Type	Material Thickness
0.25 ㎜ Brass	Steel（SKD11）	150 ㎜

Cutting Process		Stable Rough cut	Skim1	Skim2	Skim3			Max Rough cut
EDM Number	NO							
ON TIME	T.ON	16	6	4	3			18
OFF TIME	T.OFF	8	11	9	8			8
ARC ON	A.ON	14	4	3	2			16
ARC OFF	A.OFF	8	12	10	8			9
Servo Voltage	S.V	26	40	40	40			26
Wire Tension	W.T	7	11	12	12			7
Wire Feed	W.F	12	12	12	12			12
Water Flow Rate	W.F.R	7	0	0	0			7
G94F	FEED	0.6	1.2	1.6	1.6			0.6
FEED%	F.R	80	80	80	80			100
Upper Nozzle Gap		0.2	0.2	0.2	0.2			0.2
Lower Nozzle Gap		0.2	0.2	0.2	0.2			0.2
Liquid Quantity （KΩ-㎝）		55~60	55~60	55~60	55~60			55~60
OFFSET No （D）		00	01	02	03			00
Rough cut		0.188	---------	---------	---------			---------
Rough cut&1 Skim		0.238	0.156	---------	---------			---------
Rough cut&2 Skim		0.244	0.170	0.155	---------			---------
Rough cut&3 Skim		0.246	0.172	0.158	0.154			---------
OFFSET Difference		---------	0.082	0.014	0.004			---------
RESULTS								
Cutting Feed Rate（㎜/min）		0.47~0.51	0.95~0.98	1.25~1.30	1.27~1.38			0.58~0.63
Gap Voltage（GV）		29~40	42~53	43~55	45~50			31~42
Finish Surface	μmRmax	15~18	7~9	5~7	4~6			17~20
Roughness	μmRa	2.8	1.4	1.1	0.9			3.0

Property of Kent USA
Do Not Reproduce

WCUT Machning Data Sheet

Wire Dia. and Type	Material Type	Material Thickness
0.25 ㎜ Brass	Copper	10 ㎜

Cutting Process		Stable Rough cut	Skim1	Skim2	Skim3	Skim4		Max Rough cut
EDM Number	NO							
ON TIME	T.ON	16	6	4	2	1		16
OFF TIME	T.OFF	11	13	15	12	11		10
ARC ON	A.ON	14	4	2	1	1		14
ARC OFF	A.OFF	13	15	17	14	11		12
Servo Voltage	S.V	45	50	50	55	50		45
Wire Tension	W.T	7	11	11	11	11		7
Wire Feed	W.F	10	9	10	10	10		11
Water Flow Rate	W.F.R	7	0	0	0	0		7
G94F	FEED	7.5	9.5	10.0	12.0	12.0		7.5
FEED%	F.R	170	170	170	170	170		180
Upper Nozzle Gap		0.2	0.2	0.2	0.2	0.2		0.2
Lower Nozzle Gap		0.2	0.2	0.2	0.2	0.2		0.2
Liquid Quantity	（KΩ-㎝）	55~70	55~70	55~70	55~70	55~70		55~70
		--------	---------	---------	---------			---------
OFFSET No	（D）	00	01	02	03	04		00
Rough cut		0.180	---------	---------	---------	---------		0.181
Rough cut&1 Skim		0.210	0.146	---------	---------	---------		---------
Rough cut&2 Skim		0.227	0.155	0.144	---------	---------		---------
Rough cut&3 Skim		0.232	0.162	0.145	0.141	---------		---------
Rough cut&4 Skim		0.233	0.163	0.146	0.142	0.141		---------
OFFSET Difference		---------	0.070	0.017	0.004	0.001		---------
RESULTS								
Cutting Feed Rate（㎜/min）		12.0~14.0	15.0~16.5	16.5~18.0	17.0~19.0	17.0~19.0		13.0~14.5
Gap Voltage（GV）		55~68	60~75	70~78	70~78	70~78		53~68
Finish Surface	μmRmax	15~18	7~9	5~7	4~6	3~5		17~20
Roughness	μmRa	2.8	1.4	1.1	0.9	0.58		3.0

Property of Kent USA
Do Not Reproduce

WCUT Machning Data Sheet

Wire Dia. and Type	Material Type	Material Thickness
0.25 ㎜ Brass	Copper	20 ㎜

Cutting Process		Stable Rough cut	Skim1	Skim2	Skim3	Skim4		Max Rough cut
EDM Number	NO							
ON TIME	T.ON	16	6	4	2	1		18
OFF TIME	T.OFF	10	13	15	11	11		11
ARC ON	A.ON	14	4	3	1	1		16
ARC OFF	A.OFF	12	15	17	13	11		13
Servo Voltage	S.V	40	50	50	50	50		40
Wire Tension	W.T	8	11	11	11	11		8
Wire Feed	W.F	10	10	10	10	10		10
Water Flow Rate	W.F.R	7	0	0	0	0		7
G94F	FEED	6.0	9.0	11.0	12.0	12.0		6.0
FEED%	F.R	110	110	110	110	110		130
Upper Nozzle Gap		0.2	0.2	0.2	0.2	0.2		0.2
Lower Nozzle Gap		0.2	0.2	0.2	0.2	0.2		0.2
Liquid Quantity	（KΩ-㎝）	55~65	55~65	55~65	55~65	55~65		55~65
OFFSET No	（D）	00	01	02	03	04		00
Rough cut		0.182	---------	---------	---------	---------		0.183
Rough cut&1 Skim		0.223	0.147	---------	---------	---------		---------
Rough cut&2 Skim		0.234	0.156	0.144	---------	---------		---------
Rough cut&3 Skim		0.239	0.162	0.146	0.141	---------		---------
Rough cut&4 Skim		0.240	0.163	0.147	0.142	0.141		---------
OFFSET Difference		---------	0.077	0.016	0.005	0.001		---------
RESULTS								
Cutting Feed Rate（㎜/min）		6.5~7.5	8.3~9.5	10.~11.2	10.5~11.6	10.5~11.6		7.5~8.5
Gap Voltage（GV）		45~53	50~60	60~70	61~71	61~71		45~53
Finish Surface	μmRmax	15~18	7~9	5~7	4~6	3~5		17~20
Roughness	μmRa	2.8	1.4	1.1	0.9	0.56		3.0

Property of Kent USA
Do Not Reproduce

WCUT Machning Data Sheet

Wire Dia. and Type	Material Type	Material Thickness
0.25 ㎜ Brass	Copper	30 ㎜

Cutting Process		Stable Rough cut	Skim1	Skim2	Skim3	Skim4		Max Rough cut
EDM Number	NO							
ON TIME	T.ON	16	6	4	2	1		18
OFF TIME	T.OFF	10	13	14	11	11		11
ARC ON	A.ON	14	4	2	1	1		16
ARC OFF	A.OFF	12	15	16	13	11		13
Servo Voltage	S.V	38	45	45	45	50		38
Wire Tension	W.T	8	11	11	11	11		8
Wire Feed	W.F	10	10	10	10	10		10
Water Flow Rate	W.F.R	7	0	0	0	0		7
G94F	FEED	6.0	8.0	8.5	9.0	9.0		6.0
FEED%	F.R	90	90	90	90	90		90
Upper Nozzle Gap		0.2	0.2	0.2	0.2	0.2		0.2
Lower Nozzle Gap		0.2	0.2	0.2	0.2	0.2		0.2
Liquid Quantity	（KΩ-cm）	45~60	50~60	50~60	50~60	50~55		45~60
OFFSET No	（D）	00	01	02	03	04		00
Rough cut		0.183	---------	---------	---------	---------		0.184
Rough cut&1 Skim		0.223	0.148	---------	---------	---------		---------
Rough cut&2 Skim		0.235	0.156	0.145	---------	---------		---------
Rough cut&3 Skim		0.239	0.163	0.147	0.142	---------		---------
Rough cut&4 Skim		0.240	0.164	0.148	0.143	0.142		---------
OFFSET Difference		---------	0.076	0.016	0.005	0.001		---------
RESULTS								
Cutting Feed Rate（㎜/min）		5.0~5.8	7.0~7.8	7.5~8.2	8.0~9.0	8.0~9.0		5.0~6.0
Gap Voltage（GV）		40~50	50~60	50~60	50~60	50~60		40~50
Finish Surface	μmRmax	15~18	7~9	5~7	4~6	8.0~9.0		17~20
Roughness	μmRa	2.8	1.4	1.1	0.9	50~60		3.0

Property of Kent USA
Do Not Reproduce

WCUT Machning Data Sheet

Wire Dia. and Type	Material Type	Material Thickness
0.25 ㎜ Brass	Copper	40 ㎜

Cutting Process		Stable Rough cut	Skim1	Skim2	Skim3	Skim4		Max Rough cut
EDM Number	NO							
ON TIME	T.ON	16	6	4	2	1		18
OFF TIME	T.OFF	10	13	14	11	11		11
ARC ON	A.ON	14	4	2	1	1		16
ARC OFF	A.OFF	12	15	16	13	11		13
Servo Voltage	S.V	38	45	45	45	50		38
Wire Tension	W.T	8	11	11	11	11		8
Wire Feed	W.F	10	10	10	10	10		10
Water Flow Rate	W.F.R	7	0	0	0	0		7
G94F	FEED	4.5	6.0	6.5	7.0	7.0		5.0
FEED%	F.R	90	90	90	90	90		90
Upper Nozzle Gap		0.2	0.2	0.2	0.2	0.2		0.2
Lower Nozzle Gap		0.2	0.2	0.2	0.2	0.2		0.2
Liquid Quantity	（KΩ-cm）	42~55	48~59	52~60	51~61	51~61		44~59
OFFSET No	（D）	00	01	02	03	04		00
Rough cut		0.184	---------	---------	---------	---------		0.184
Rough cut&1 Skim		0.224	0.149	---------	---------	---------		---------
Rough cut&2 Skim		0.235	0.157	0.147	---------	---------		---------
Rough cut&3 Skim		0.239	0.165	0.147	0.144	---------		---------
Rough cut&4 Skim		0.240	0.166	0.148	0.145	0.144		---------
OFFSET Difference		---------	0.074	0.018	0.003	0.001		---------
RESULTS								
Cutting Feed Rate（㎜/min）		3.6~4.4	5.2~6.0	5.8~6.6	7.2~8.0	7.2~8.0		4.1~4.7
Gap Voltage（GV）		40~50	50~60	50~60	50~60	50~60		35~48
Finish Surface	μmRmax	15~18	7~9	5~7	4~6	3~5		17~20
Roughness	μmRa	2.8	1.4	1.1	0.9	0.59		3.0

Property of Kent USA
Do Not Reproduce

WCUT Machning Data Sheet

Wire Dia. and Type	Material Type	Material Thickness
0.25 ㎜ Brass	Copper	50 ㎜

Cutting Process		Stable Rough cut	Skim1	Skim2	Skim3	Skim4		Max Rough cut
EDM Number	NO							
ON TIME	T.ON	16	6	4	2	1		18
OFF TIME	T.OFF	9	13	13	9	11		10
ARC ON	A.ON	14	4	2	1	1		16
ARC OFF	A.OFF	11	14	15	10	11		12
Servo Voltage	S.V	35	45	45	45	50		35
Wire Tension	W.T	9	12	12	12	12		8
Wire Feed	W.F	10	10	10	10	10		10
Water Flow Rate	W.F.R	7	0	0	0	0		7
G94F	FEED	2.0	4.0	5.0	5.0	5.0		2.0
FEED%	F.R	140	140	120	120	120		160
Upper Nozzle Gap		0.2	0.2	0.2	0.2	0.2		0.2
Lower Nozzle Gap		0.2	0.2	0.2	0.2	0.2		0.2
Liquid Quantity	（KΩ-㎝）	53~60	53~60	53~60	53~60	53~60		53~60
OFFSET No	（D）	00	01	02	03	04		00
Rough cut		0.188	---------	---------	---------	---------		0.190
Rough cut&1 Skim		0.232	0.154	---------	---------	---------		---------
Rough cut&2 Skim		0.242	0.164	0.152	---------	---------		---------
Rough cut&3 Skim		0.242	0.164	0.155	0.152	---------		---------
Rough cut&4 Skim		0.243	0.165	0.156	0.153	0.152		---------
OFFSET Difference		---------	0.078	0.009	0.003	0.001		---------
RESULTS								
Cutting Feed Rate（㎜/min）		2.75~3.13	5.45~5.66	5.96~6.13	5.96~6.14	5.96~6.14		3.16~3.34
Gap Voltage（GV）		38~52	45~55	50~60	52~63	52~63		40~55
Finish Surface	μmRmax	15~18	7~9	5~7	4~6	3~5		17~20
Roughness	μmRa	2.8	1.4	1.1	0.9	0.56		3.0

Property of Kent USA
Do Not Reproduce

WCUT Machning Data Sheet

Wire Dia. and Type	Material Type	Material Thickness
0.25 ㎜ Brass	Copper	60 ㎜

Cutting Process		Stable Rough cut	Skim1	Skim2	Skim3			Max Rough cut
EDM Number	NO							
ON TIME	T.ON	16	6	4	2			18
OFF TIME	T.OFF	9	13	13	9			10
ARC ON	A.ON	14	4	2	1			16
ARC OFF	A.OFF	11	14	15	10			12
Servo Voltage	S.V	35	45	45	45			35
Wire Tension	W.T	9	12	12	12			8
Wire Feed	W.F	10	10	10	10			10
Water Flow Rate	W.F.R	7	0	0	0			7
G94F	FEED	1.8	3.0	4.0	4.0			1.8
FEED%	F.R	140	140	140	140			160
Upper Nozzle Gap		0.2	0.2	0.2	0.2			0.2
Lower Nozzle Gap		0.2	0.2	0.2	0.2			0.2
Liquid Quantity （KΩ-㎝）		55~60	55~60	55~60	55~60			55~60
OFFSET No （D）		00	01	02	03			00
Rough cut		0.192	---------	---------	----------			0.194
Rough cut&1 Skim		0.234	0.156	---------	---------			---------
Rough cut&2 Skim		0.244	0.166	0.154	---------			---------
Rough cut&3 Skim		0.244	0.166	0.157	0.154			---------
OFFSET Difference		---------	0.078	0.009	0.002			---------
RESULTS								
Cutting Feed Rate（㎜/min）		2.44~2.56	4.10~4.45	5.40~5.65	5.55~5.75			2.86~2.99
Gap Voltage（GV）		39~46	45~56	50~60	53~64			39~46
Finish Surface	μmRmax	15~18	7~9	5~7	4~6			17~20
Roughness	μmRa	2.8	1.4	1.1	0.9			3.0

Property of Kent USA
Do Not Reproduce

WCUT Machning Data Sheet

Wire Dia. and Type	Material Type	Material Thickness
0.25 ㎜ Brass	Copper	70 ㎜

Cutting Process		Stable Rough cut	Skim1	Skim2	Skim3			Max Rough cut
EDM Number	NO							
ON TIME	T.ON	16	6	4	2			18
OFF TIME	T.OFF	9	12	12	9			10
ARC ON	A.ON	14	4	2	1			16
ARC OFF	A.OFF	11	14	14	10			12
Servo Voltage	S.V	33	45	45	45			33
Wire Tension	W.T	9	12	12	12			8
Wire Feed	W.F	10	10	10	11			10
Water Flow Rate	W.F.R	7	0	0	0			7
G94F	FEED	1.6	2.8	3.6	3.6			1.6
FEED%	F.R	130	120	120	120			150
Upper Nozzle Gap		0.2	0.2	0.2	0.2			0.2
Lower Nozzle Gap		0.2	0.2	0.2	0.2			0.2
Liquid Quantity （KΩ-㎝）		55~60	55~60	55~60	55~60			55~60
OFFSET No （D）		00	01	02	03			00
Rough cut		0.194	---------	---------	---------			0.195
Rough cut&1 Skim		0.237	0.158	---------	---------			---------
Rough cut&2 Skim		0.246	0.168	0.156	---------			---------
Rough cut&3 Skim		0.247	0.169	0.159	0.156			---------
OFFSET Difference		---------	0.078	0.010	0.003			---------
RESULTS								
Cutting Feed Rate（㎜/min）		2.04~2.22	3.33~3.53	4.21~4.66	4.32~4.72			2.25~2.45
Gap Voltage（GV）		35~45	48~56	50~58	55~60			38~46
Finish Surface	μmRmax	15~18	7~9	5~7	4~6			17~20
Roughness	μmRa	2.8	1.4	1.1	0.9			3.0

Property of Kent USA
Do Not Reproduce

WCUT Machning Data Sheet

Wire Dia. and Type	Material Type	Material Thickness
0.25 ㎜ Brass	Copper	80 ㎜

Cutting Process		Stable Rough cut	Skim1	Skim2	Skim3			Max Rough cut
EDM Number	NO							
ON TIME	T.ON	16	6	4	2			18
OFF TIME	T.OFF	8	11	11	9			10
ARC ON	A.ON	14	4	2	1			16
ARC OFF	A.OFF	10	13	13	10			12
Servo Voltage	S.V	30	43	43	43			32
Wire Tension	W.T	9	12	12	12			8
Wire Feed	W.F	11	11	11	11			11
Water Flow Rate	W.F.R		0	0	0			7
G94F	FEED	1.4	2.4	3.3	3.3			1.4
FEED%	F.R	130	120	120	120			150
Upper Nozzle Gap		0.2	0.2	0.2	0.2			0.2
Lower Nozzle Gap		0.2	0.2	0.2	0.2			0.2
Liquid Quantity （KΩ-㎝）		50~55	50~55	50~55	50~55			50~55
OFFSET No （D）		00	01	02	03			00
Rough cut		0.195	---------	---------	---------			0.196
Rough cut&1 Skim		0.238	0.159	---------	---------			---------
Rough cut&2 Skim		0.247	0.169	0.157	---------			---------
Rough cut&3 Skim		0.249	0.170	0.160	0.157			---------
OFFSET Difference		---------	0.079	0.010	0.003			---------
RESULTS								
Cutting Feed Rate（㎜/min）		1.78~1.88	2.96~3.24	3.92~4.24	3.96~4.44			2.04~2.24
Gap Voltage（GV）		35~46	45~56	46~52	50~58			35~43
Finish Surface	μmRmax	15~18	7~9	5~7	4~6			17~20
Roughness	μmRa	2.8	1.4	1.1	0.9			3.0

Property of Kent USA
Do Not Reproduce

WCUT Machning Data Sheet

Wire Dia. and Type	Material Type	Material Thickness
0.25 ㎜ Brass	Copper	90 ㎜

Cutting Process		Stable Rough cut	Skim1	Skim2	Skim3			Max Rough cut
EDM Number	NO							
ON TIME	T.ON	16	6	4	2			18
OFF TIME	T.OFF	8	11	11	9			10
ARC ON	A.ON	14	4	2	1			16
ARC OFF	A.OFF	10	13	13	10			12
Servo Voltage	S.V	30	43	43	43			32
Wire Tension	W.T	9	12	12	12			8
Wire Feed	W.F	11	11	11	11			11
Water Flow Rate	W.F.R	7	0	0	0			7
G94F	FEED	1.2	2.0	3.0	3.0			1.2
FEED%	F.R	120	120	120	120			140
Upper Nozzle Gap		0.2	0.2	0.2	0.2			0.2
Lower Nozzle Gap		0.2	0.2	0.2	0.2			0.2
Liquid Quantity （KΩ-㎝）		50~55	50~55	50~55	50~55			50~55
OFFSET No （D）		00	01	02	03			00
Rough cut		0.197	---------	---------	---------			0.198
Rough cut&1 Skim		0.240	0.161	---------	---------			---------
Rough cut&2 Skim		0.249	0.171	0.159	---------			---------
Rough cut&3 Skim		0.251	0.172	0.162	0.159			---------
OFFSET Difference		---------	0.079	0.010	0.003			---------
RESULTS								
Cutting Feed Rate（㎜/min）		1.80~1.92	2.36~2.44	3.46~3.64	3.58~3.72			1.64~1.78
Gap Voltage（GV）		34~43	45~55	46~55	50~60			35~42
Finish Surface	μmRmax	15~18	7~9	5~7	4~6			17~20
Roughness	μmRa	2.8	1.4	1.1	0.9			3.0

Property of Kent USA
Do Not Reproduce

WCUT Machning Data Sheet

Wire Dia. and Type	Material Type	Material Thickness
0.25 ㎜ Brass	Copper	100 ㎜

Cutting Process		Stable Rough cut	Skim1	Skim2	Skim3			Max Rough cut
EDM Number	NO							
ON TIME	T.ON	16	6	4	2			18
OFF TIME	T.OFF	8	11	10	8			9
ARC ON	A.ON	14	4	2	2			16
ARC OFF	A.OFF	10	13	12	10			11
Servo Voltage	S.V	30	40	40	40			28
Wire Tension	W.T	8	12	12	12			8
Wire Feed	W.F	11	11	11	11			12
Water Flow Rate	W.F.R	7	0	0	0			7
G94F	FEED	1.0	1.5	2.5	2.5			1.0
FEED%	F.R	120	120	120	120			140
Upper Nozzle Gap		0.2	0.2	0.2	0.2			0.2
Lower Nozzle Gap		0.2	0.2	0.2	0.2			0.2
Liquid Quantity （KΩ-㎝）		50~55	50~55	50~55	50~55			50~55
OFFSET No （D）		00	01	02	03			00
Rough cut		0.198	---------	---------	---------			0.199
Rough cut&1 Skim		0.242	0.162	---------	---------			---------
Rough cut&2 Skim		0.250	0.172	0.160	---------			---------
Rough cut&3 Skim		0.252	0.173	0.163	0.160			---------
OFFSET Difference		---------	0.079	0.010	0.003			---------
RESULTS								
Cutting Feed Rate（㎜/min）		1.18~1.24	1.76~1.88	2.85~3.15	2.90~3.30			1.35~1.45
Gap Voltage（GV）		31~39	45~54	45~53	48~55			32~40
Finish Surface	μmRmax	15~18	7~9	5~7	4~6			17~20
Roughness	μmRa	2.8	1.4	1.1	0.9			3.0

Property of Kent USA
Do Not Reproduce

WCUT Machning Data Sheet

Wire Dia. and Type	Material Type	Material Thickness
0.25 ㎜ Brass	Copper	125 ㎜

Cutting Process		Stable Rough cut	Skim1	Skim2	Skim3			Max Rough cut
EDM Number	NO							
ON TIME	T.ON	16	6	4	3			18
OFF TIME	T.OFF	8	10	10	8			8
ARC ON	A.ON	14	4	3	2			16
ARC OFF	A.OFF	10	12	12	10			10
Servo Voltage	S.V	28	40	40	40			40
Wire Tension	W.T	8	12	12	12			8
Wire Feed	W.F	12	12	12	12			12
Water Flow Rate	W.F.R	7	0	0	0			7
G94F	FEED	0.8	1.4	2.5	2.5			1.0
FEED%	F.R	100	100	100	100			100
Upper Nozzle Gap		0.2	0.2	0.2	0.2			0.2
Lower Nozzle Gap		0.2	0.2	0.2	0.2			0.2
Liquid Quantity （KΩ-㎝）		55~60	55~60	55~60	55~60			55~60
OFFSET No （D）		00	01	02	03			00
Rough cut		0.200	---------	---------	---------			0.201
Rough cut&1 Skim		0.250	0.164	---------	---------			---------
Rough cut&2 Skim		0.256	0.174	0.162	---------			---------
Rough cut&3 Skim		0.264	0.174	0.165	0.162			---------
OFFSET Difference		---------	0.090	0.009	0.002			---------
RESULTS								
Cutting Feed Rate（㎜/min）		0.78~0.84	1.38~1.54	2.45~2.75	2.50~2.80			0.95~1.15
Gap Voltage（GV）		30~40	42~52	45~53	48~65			31~42
Finish Surface	μmRmax	15~18	7~9	5~7	4~6			17~20
Roughness	μmRa	2.8	1.4	1.1	0.9			3.0

Property of Kent USA
Do Not Reproduce

WCUT Machning Data Sheet

Wire Dia. and Type	Material Type	Material Thickness
0.25 ㎜ Brass	Copper	150 ㎜

Cutting Process		Stable Rough cut	Skim1	Skim2	Skim3			Max Rough cut
EDM Number	NO							
ON TIME	T.ON	16	6	4	3			18
OFF TIME	T.OFF	8	11	10	8			8
ARC ON	A.ON	14	5	3	2			16
ARC OFF	A.OFF	9	13	11	9			9
Servo Voltage	S.V	28	40	40	40			30
Wire Tension	W.T	7	12	12	12			7
Wire Feed	W.F	12	12	12	13			12
Water Flow Rate	W.F.R	7	0	0	0			7
G94F	FEED	0.6	1.2	2.2	2.2			0.8
FEED%	F.R	100	100	100	100			100
Upper Nozzle Gap		0.2	0.2	0.2	0.2			0.2
Lower Nozzle Gap		0.2	0.2	0.2	0.2			0.2
Liquid Quantity （KΩ-㎝）		50~55	50~55	50~55	50~55			50~55
OFFSET No （D）		00	01	02	03			00
Rough cut		0.202	---------	---------	---------			0.203
Rough cut&1 Skim		0.258	0.166	---------	---------			---------
Rough cut&2 Skim		0.266	0.178	0.163	---------			---------
Rough cut&3 Skim		0.268	0.180	0.168	0.163			---------
OFFSET Difference		---------	0.088	0.012	0.005			---------
RESULTS								
Cutting Feed Rate（㎜/min）		0.58~0.64	1.18~1.26	2.10~2.34	2.15~2.35			0.78~0.82
Gap Voltage（GV）		30~40	42~50	43~52	45~56			30~41
Finish Surface	μmRmax	15~18	7~9	5~7	4~6			17~20
Roughness	μmRa	2.8	1.4	1.1	0.9			3.0

Property of Kent USA
Do Not Reproduce

WCUT Machning Data Sheet

Wire Dia. and Type	Material Type	Material Thickness
0.25 ㎜ Brass	Aluminium	10 ㎜

Cutting Process		Stable Rough cut	Skim1	Skim2	Skim3	Skim4		Max Rough cut
EDM Number	NO							
ON TIME	T.ON	16	6	4	2	1		17
OFF TIME	T.OFF	12	13	13	10	11		13
ARC ON	A.ON	12	4	2	1	1		13
ARC OFF	A.OFF	14	15	15	11	11		15
Servo Voltage	S.V	50	50	55	55	50		45
Wire Tension	W.T	7	10	10	10	10		7
Wire Feed	W.F	9	9	9	9	10		9
Water Flow Rate	W.F.R	7	0	0	0	0		7
G94F	FEED	12.0	20.0	30.0	30.0	30.0		12.0
FEED%	F.R	160	160	160	160	160		170
Upper Nozzle Gap		0.2	0.2	0.2	0.2	0.2		0.2
Lower Nozzle Gap		0.2	0.2	0.2	0.2	0.2		0.2
Liquid Quantity	（KΩ-cm）	50~55	50~55	50~55	50~55	50~55		50~55
OFFSET No	（D）	00	01	02	03	04		00
Rough cut		0.192	---------	---------	---------	---------		0.193
Rough cut&1 Skim		0.243	0.148	---------	---------	---------		---------
Rough cut&2 Skim		0.258	0.161	0.139	---------	---------		---------
Rough cut&3 Skim		0.258	0.165	0.148	0.138	---------		---------
Rough cut&4 Skim		0.259	0.166	0.149	0.139	0.138		---------
OFFSET Difference		---------	0.093	0.017	0.010	0.001		---------
RESULTS								
Cutting Feed Rate（㎜/min）		18.2~20.2	31.0~33.0	46.0~48.0	46.0~48.0	46.0~48.0		19.4~21.4
Gap Voltage（GV）		55~60	60~65	60~65	65~70	65~70		50~60
Finish Surface	μmRmax	15~18	7~9	5~7	4~6	3~5		17~20
Roughness	μmRa	2.8	1.4	1.1	0.9	0.61		3.0

Property of Kent USA
Do Not Reproduce

WCUT Machning Data Sheet

Wire Dia. and Type	Material Type	Material Thickness
0.25 ㎜ Brass	Aluminium	20 ㎜

Cutting Process		Stable Rough cut	Skim1	Skim2	Skim3	Skim4		Max Rough cut
EDM Number	NO							
ON TIME	T.ON	16	6	4	2	1		18
OFF TIME	T.OFF	12	13	13	10	11		13
ARC ON	A.ON	12	4	2	1	1		14
ARC OFF	A.OFF	14	15	15	11	11		15
Servo Voltage	S.V	50	50	55	55	50		45
Wire Tension	W.T	7	11	10	10	10		7
Wire Feed	W.F	9	9	9	9	10		9
Water Flow Rate	W.F.R	7	0	0	0	0		7
G94F	FEED	8.0	13.0	20.0	20.0	20.0		8.0
FEED%	F.R	120	130	130	130	130		160
Upper Nozzle Gap		0.2	0.2	0.2	0.2	0.2		0.2
Lower Nozzle Gap		0.2	0.2	0.2	0.2	0.2		0.2
Liquid Quantity	（KΩ-㎝）	50~55	50~55	50~55	50~55	50~55		50~55
OFFSET No	（D）	00	01	02	03	04		00
Rough cut		0.197	---------	---------	---------	---------		0.198
Rough cut&1 Skim		0.245	0.150	---------	---------	---------		---------
Rough cut&2 Skim		0.260	0.165	0.141	---------	---------		---------
Rough cut&3 Skim		0.270	0.175	0.147	0.141	---------		---------
Rough cut&4 Skim		0.271	0.176	0.148	0.142	0.141		---------
OFFSET Difference		---------	0.095	0.028	0.006	0.001		---------
RESULTS								
Cutting Feed Rate（㎜/min）		9.0~10.0	15.5~17.5	25.0~27.0	25.0~27.0	25.0~27.0		12.0~13.5
Gap Voltage（GV）		56~61	60~69	63~69	59~67	59~67		51~59
Finish Surface	μmRmax	15~18	7~9	5~7	4~6	3~5		17~20
Roughness	μmRa	2.8	1.4	1.1	0.9	0.60		3.0

Property of Kent USA
Do Not Reproduce

WCUT Machning Data Sheet

Wire Dia. and Type	Material Type	Material Thickness
0.25 ㎜ Brass	Aluminium	30 ㎜

Cutting Process		Stable Rough cut	Skim1	Skim2	Skim3	Skim4		Max Rough cut
EDM Number	NO							
ON TIME	T.ON	16	6	4	2	1		18
OFF TIME	T.OFF	12	13	13	10	11		13
ARC ON	A.ON	12	4	2	1	1		14
ARC OFF	A.OFF	14	15	15	11	11		15
Servo Voltage	S.V	50	50	55	55	50		45
Wire Tension	W.T	7	11	10	10	10		7
Wire Feed	W.F	9	9	9	9	10		9
Water Flow Rate	W.F.R	7	0	0	0	0		7
G94F	FEED	5.0	7.0	10.0	10.0	10.0		5.0
FEED%	F.R	130	160	160	160	160		150
Upper Nozzle Gap		0.2	0.2	0.2	0.2	0.2		0.2
Lower Nozzle Gap		0.2	0.2	0.2	0.2	0.2		0.2
Liquid Quantity	（KΩ-㎝）	50~55	50~55	50~55	50~55	50~55		50~55
OFFSET No	（D）	00	01	02	03	04		00
Rough cut		0.201	---------	---------	---------	---------		0.202
Rough cut&1 Skim		0.250	0.152	---------	---------	---------		---------
Rough cut&2 Skim		0.262	0.165	0.146	---------	---------		---------
Rough cut&3 Skim		0.272	0.176	0.154	0.145	---------		---------
Rough cut&4 Skim		0.273	0.177	0.155	0.146	0.145		---------
OFFSET Difference		---------	0.096	0.022	0.009	0.001		---------
RESULTS								
Cutting Feed Rate（㎜/min）		6.0~7.5	11.0~12.5	15.0~16.5	15.0~16.5	15.0~16.5		7.0~8.5
Gap Voltage（GV）		55~62	63~68	65~70	65~70	65~70		50~60
Finish Surface	μmRmax	15~18	7~9	5~7	4~6	3~5		17~20
Roughness	μmRa	2.8	1.4	1.1	0.9	0.61		3.0

Property of Kent USA
Do Not Reproduce

WCUT Machning Data Sheet

Wire Dia. and Type	Material Type	Material Thickness
0.25 ㎜ Brass	Aluminium	40 ㎜

Cutting Process		Stable Rough cut	Skim1	Skim2	Skim3	Skim4		Max Rough cut
EDM Number	NO							
ON TIME	T.ON	16	6	4	2	1		18
OFF TIME	T.OFF	12	13	13	10	11		13
ARC ON	A.ON	12	4	2	1	1		14
ARC OFF	A.OFF	14	15	15	11	11		15
Servo Voltage	S.V	50	50	55	50	50		45
Wire Tension	W.T	7	11	10	10	10		7
Wire Feed	W.F	9	9	9	9	10		9
Water Flow Rate	W.F.R	7	0	0	0	0		7
G94F	FEED	4.0	6.0	9.0	9.0	9.0		4.0
FEED%	F.R	120	140	140	140	140		140
Upper Nozzle Gap		0.2	0.2	0.2	0.2	0.2		0.2
Lower Nozzle Gap		0.2	0.2	0.2	0.2	0.2		0.2
Liquid Quantity	（KΩ-cm）	50~55	50~55	50~55	50~55	50~55		50~55
OFFSET No	（D）	00	01	02	03	04		00
Rough cut		0.205	---------	---------	---------	---------		0.208
Rough cut&1 Skim		0.253	0.154	---------	---------	---------		---------
Rough cut&2 Skim		0.265	0.165	0.149	---------	---------		---------
Rough cut&3 Skim		0.273	0.176	0.154	0.147	---------		---------
Rough cut&4 Skim		0.274	0.177	0.155	0.148	0.147		---------
OFFSET Difference		---------	0.0970	0.022	0.007	0.001		---------
RESULTS								
Cutting Feed Rate（㎜/min）		4.6~5.6	8.2~9.2	12.0~13.6	12.2~13.6	12.2~13.6		5.4~6.6
Gap Voltage（GV）		55~61	62~69	60~70	58~65	58~65		50~60
Finish Surface	μmRmax	15~18	7~9	5~7	4~6	3~5		17~20
Roughness	μmRa	2.8	1.4	1.1	0.9	0.60		3.0

Property of Kent USA
Do Not Reproduce

WCUT Machning Data Sheet

Wire Dia. and Type	Material Type	Material Thickness
0.25 ㎜ Brass	Aluminium	50 ㎜

Cutting Process		Stable Rough cut	Skim1	Skim2	Skim3	Skim4		Max Rough cut
EDM Number	NO							
ON TIME	T.ON	16	6	4	2	1		18
OFF TIME	T.OFF	12	13	13	10	11		13
ARC ON	A.ON	12	4	2	1	1		14
ARC OFF	A.OFF	14	15	15	11	11		15
Servo Voltage	S.V	50	50	55	55	50		45
Wire Tension	W.T	7	11	11	12	12		7
Wire Feed	W.F	9	9	9	10	10		9
Water Flow Rate	W.F.R	7	0	0	0	0		7
G94F	FEED	3.0	5.0	8.0	8.5	8.5		3.0
FEED%	F.R	120	120	120	120	120		150
Upper Nozzle Gap		0.2	0.2	0.2	0.2	0.2		0.2
Lower Nozzle Gap		0.2	0.2	0.2	0.2	0.2		0.2
Liquid Quantity	（KΩ-cm）	50~55	50~55	50~55	50~55	50~55		50~55
OFFSET No	（D）	00	01	02	03	04		00
Rough cut		0.208	---------	---------	---------	---------		0.212
Rough cut&1 Skim		0.256	0.156	---------	---------	---------		---------
Rough cut&2 Skim		0.268	0.166	0.151	---------	---------		---------
Rough cut&3 Skim		0.275	0.176	0.155	0.148	---------		---------
Rough cut&4 Skim		0.276	0.177	0.156	0.149	0.148		---------
OFFSET Difference		---------	0.099	0.021	0.007	0.001		---------
RESULTS								
Cutting Feed Rate（㎜/min）		3.4~4.0	5.8~6.2	9.4~10.2	9.8~10.6	9.8~10.6		4.3~4.6
Gap Voltage（GV）		53~61	60~70	65~75	65~70	60~70		53~62
Finish Surface	μmRmax	15~18	7~9	5~7	4~6	3~5		17~20
Roughness	μmRa	2.8	1.4	1.1	0.9	0.6		3.0

Property of Kent USA
Do Not Reproduce

WCUT Machning Data Sheet

Wire Dia. and Type	Material Type	Material Thickness
0.25 ㎜ Brass	Aluminium	60 ㎜

Cutting Process		Stable Rough cut	Skim1	Skim2	Skim3	Skim4		Max Rough cut
EDM Number	NO							
ON TIME	T.ON	16	6	4	2	1		18
OFF TIME	T.OFF	12	13	13	10	11		13
ARC ON	A.ON	12	4	2	1	1		14
ARC OFF	A.OFF	14	15	15	11	11		15
Servo Voltage	S.V	50	50	50	50	50		45
Wire Tension	W.T	7	11	11	12	12		7
Wire Feed	W.F	9	9	9	10	10		10
Water Flow Rate	W.F.R	7	0	0	0	0		7
G94F	FEED	3.6	5.0	8.0	8.0	8.0		3.6
FEED%	F.R	100	100	100	100	100		120
Upper Nozzle Gap		0.2	0.2	0.2	0.2	0.2		0.2
Lower Nozzle Gap		0.2	0.2	0.2	0.2	0.2		0.2
Liquid Quantity	（KΩ-㎝）	55~60	55~60	55~60	55~60	55~60		55~60
OFFSET No	（D）	00	01	02	03	04		00
Rough cut		0.210	---------	---------	---------	---------		0.212
Rough cut&1 Skim		0.257	0.157	---------	---------	---------		---------
Rough cut&2 Skim		0.270	0.168	0.152	---------	---------		---------
Rough cut&3 Skim		0.275	0.176	0.156	0.149	---------		---------
Rough cut&4 Skim		0.276	0.177	0.157	0.150	0.149		---------
OFFSET Difference		---------	0.099	0.020	0.007	0.001		---------
RESULTS								
Cutting Feed Rate（㎜/min）		3.8~4.0	4.8~5.4	7.8~8.6	8.1~8.8	8.1~8.8		4.2~4.6
Gap Voltage（GV）		52~60	55~64	60~70	60~70	60~70		48~58
Finish Surface	μmRmax	15~18	7~9	5~7	4~6	3~5		17~20
Roughness	μmRa	2.8	1.4	1.1	0.9	0.6		3.0

Property of Kent USA
Do Not Reproduce

WCUT Machning Data Sheet

Wire Dia. and Type	Material Type	Material Thickness
0.25 ㎜ Brass	Aluminium	70 ㎜

Cutting Process		Stable Rough cut	Skim1	Skim2	Skim3			Max Rough cut
EDM Number	NO							
ON TIME	T.ON	16	6	4	2			18
OFF TIME	T.OFF	12	13	13	10			13
ARC ON	A.ON	12	4	2	1			14
ARC OFF	A.OFF	14	15	15	11			15
Servo Voltage	S.V	45	45	50	50			45
Wire Tension	W.T	8	11	11	12			8
Wire Feed	W.F	11	11	11	11			11
Water Flow Rate	W.F.R	7	0	0	0			7
G94F	FEED	2.6	4.8	7.5	7.5			2.8
FEED%	F.R	100	100	100	100			100
Upper Nozzle Gap		0.2	0.2	0.2	0.2			0.2
Lower Nozzle Gap		0.2	0.2	0.2	0.2			0.2
Liquid Quantity （KΩ-㎝）		55~60	55~60	55~60	55~60			55~60
OFFSET No （D）		00	01	02	03			00
Rough cut		0.212	---------	---------	---------			0.214
Rough cut&1 Skim		0.256	0.158	---------	---------			---------
Rough cut&2 Skim		0.271	0.168	0.153	---------			---------
Rough cut&3 Skim		0.276	0.177	0.158	0.150			---------
OFFSET Difference		---------	0.099	0.019	0.0080.008			---------
RESULTS								
Cutting Feed Rate（㎜/min）		2.6~2.9	4.4~5.8	7.4~8.4	7.6~8.6			2.7~3.0
Gap Voltage（GV）		48~58	52~60	53~62	60~70			48~56
Finish Surface	μmRmax	15~18	7~9	5~7	4~6			17~20
Roughness	μmRa	2.8	1.4	1.1	0.9			3.0

Property of Kent USA
Do Not Reproduce

WCUT Machning Data Sheet

Wire Dia. and Type	Material Type	Material Thickness
0.25 ㎜ Brass	Aluminium	80 ㎜

Cutting Process		Stable Rough cut	Skim1	Skim2	Skim3			Max Rough cut
EDM Number	NO							
ON TIME	T.ON	16	6	4	2			18
OFF TIME	T.OFF	12	13	13	10			13
ARC ON	A.ON	12	4	2	1			14
ARC OFF	A.OFF	14	15	15	11			15
Servo Voltage	S.V	45	45	50	50			45
Wire Tension	W.T	8	11	11	12			8
Wire Feed	W.F	11	11	11	11			11
Water Flow Rate	W.F.R	7	0	0	0			7
G94F	FEED	1.8	4.4	7.2	7.2			2.0
FEED%	F.R	120	120	120	120			120
Upper Nozzle Gap		0.2	0.2	0.2	0.2			0.2
Lower Nozzle Gap		0.2	0.2	0.2	0.2			0.2
Liquid Quantity （KΩ-㎝）		55~60	55~60	55~60	55~60			55~60
OFFSET No （D）		00	01	02	03			00
Rough cut		0.213	---------	---------	---------			0.215
Rough cut&1 Skim		0.256	0.157	---------	---------			---------
Rough cut&2 Skim		0.272	0.169	0.153	---------			---------
Rough cut&3 Skim		0.276	0.177	0.159	0.151			---------
OFFSET Difference		---------	0.099	0.018	0.008			---------
RESULTS								
Cutting Feed Rate（㎜/min）		2.10~2.24	5.20~5.60	8.60~8.76	8.64~8.78			2.34~2.48
Gap Voltage（GV）		48~58	52~60	53~62	60~70			48~56
Finish Surface	μmRmax	15~18	7~9	5~7	4~6			17~20
Roughness	μmRa	2.8	1.4	1.1	0.9			3.0

Property of Kent USA
Do Not Reproduce

WCUT Machning Data Sheet

Wire Dia. and Type	Material Type	Material Thickness
0.25 ㎜ Brass	Aluminium	90 ㎜

Cutting Process		Stable Rough cut	Skim1	Skim2	Skim3			Max Rough cut
EDM Number	NO							
ON TIME	T.ON	16	6	4	2			18
OFF TIME	T.OFF	11	13	12	10			13
ARC ON	A.ON	12	4	2	1			14
ARC OFF	A.OFF	14	15	15	11			15
Servo Voltage	S.V	40	45	45	45			40
Wire Tension	W.T	8	11	11	12			8
Wire Feed	W.F	11	12	12	12			11
Water Flow Rate	W.F.R	7	0	0	0			7
G94F	FEED	1.6	4.2	7.0	7.0			1.8
FEED%	F.R	110	110	110	110			110
Upper Nozzle Gap		0.2	0.2	0.2	0.2			0.2
Lower Nozzle Gap		0.2	0.2	0.2	0.2			0.2
Liquid Quantity （KΩ-㎝）		55~60	55~60	55~60	55~60			55~60
OFFSET No （D）		00	01	02	03			00
Rough cut		0.215	---------	---------	---------			0.217
Rough cut&1 Skim		0.258	0.159	---------	---------			---------
Rough cut&2 Skim		0.274	0.171	0.155	---------			---------
Rough cut&3 Skim		0.278	0.179	0.161	0.153			---------
OFFSET Difference		---------	0.099	0.018	0.008			---------
RESULTS								
Cutting Feed Rate（㎜/min）		1.74~1.78	4.58~4.66	7.5~7.8	7.5~7.8			1.96~2.04
Gap Voltage（GV）		43~49	46~55	51~60	53~63			42~53
Finish Surface	μmRmax	15~18	7~9	5~7	4~6			17~20
Roughness	μmRa	2.8	1.4	1.1	0.9			3.0

Property of Kent USA
Do Not Reproduce

WCUT Machning Data Sheet

Wire Dia. and Type	Material Type	Material Thickness
0.25 ㎜ Brass	Aluminium	100 ㎜

Cutting Process		Stable Rough cut	Skim1	Skim2	Skim3			Max Rough cut
EDM Number	NO							
ON TIME	T.ON	16	6	4	2			18
OFF TIME	T.OFF	11	13	12	10			12
ARC ON	A.ON	14	4	2	2			14
ARC OFF	A.OFF	13	15	14	12			14
Servo Voltage	S.V	40	45	45	45			40
Wire Tension	W.T	8	11	11	12			8
Wire Feed	W.F	11	12	12	12			11
Water Flow Rate	W.F.R	7	0	0	0			7
G94F	FEED	1.5	4.0	6.5	6.5			1.6
FEED%	F.R	100	100	100	100			100
Upper Nozzle Gap		0.2	0.2	0.2	0.2			0.2
Lower Nozzle Gap		0.2	0.2	0.2	0.2			0.2
Liquid Quantity （KΩ-㎝）		50~55	50~55	50~55	50~5			50~55
OFFSET No （D）		00	01	02	03			00
Rough cut		0.216	---------	---------	---------			0.218
Rough cut&1 Skim		0.258	0.160	---------	---------			---------
Rough cut&2 Skim		0.275	0.172	0.155	---------			---------
Rough cut&3 Skim		0.279	0.180	0.163	0.154			---------
OFFSET Difference		---------	0.099	0.017	0.009			---------
RESULTS								
Cutting Feed Rate（㎜/min）		1.48~1.53	3.96~4.22	6.3~6.8	6.4~6.9			1.56~1.63
Gap Voltage（GV）		43~49	50~56	54~60	54~60			43~50
Finish Surface	μmRmax	15~18	7~9	5~7	4~6			17~20
Roughness	μmRa	2.8	1.4	1.1	0.9			3.0

Property of Kent USA
Do Not Reproduce

WCUT Machning Data Sheet

Wire Dia. and Type	Material Type	Material Thickness
0.25 ㎜ Brass	Aluminium	125 ㎜

Cutting Process		Stable Rough cut	Skim1	Skim2	Skim3			Max Rough cut
EDM Number	NO							
ON TIME	T.ON	16	6	4	2			18
OFF TIME	T.OFF	11	12	12	9			12
ARC ON	A.ON	14	5	3	2			14
ARC OFF	A.OFF	13	14	14	9			14
Servo Voltage	S.V	40	45	45	45			45
Wire Tension	W.T	9	12	12	12			9
Wire Feed	W.F	12	12	12	12			12
Water Flow Rate	W.F.R	7	0	0	0			7
G94F	FEED	1.0	2.5	4.2	4.2			1.2
FEED%	F.R	100	100	100	100			100
Upper Nozzle Gap		0.2	0.2	0.2	0.2			0.2
Lower Nozzle Gap		0.2	0.2	0.2	0.2			0.2
Liquid Quantity （KΩ-㎝）		50~55	50~55	50~55	50~55			50~55
OFFSET No （D）		00	01	02	03			00
Rough cut		0.218	---------	---------	---------			0.220
Rough cut&1 Skim		0.260	0.162	---------	---------			---------
Rough cut&2 Skim		0.279	0.174	0.157	---------			---------
Rough cut&3 Skim		0.284	0.182	0.165	0.156			---------
OFFSET Difference		---------	0.102	0.017	0.009			---------
RESULTS								
Cutting Feed Rate（㎜/min）		0.95~1.11	2.43~2.52	4.10~4.44	4.10~4.44			1.14~1.25
Gap Voltage（GV）		41~51	45~56	50~58	53~60			41~50
Finish Surface	μmRmax	15~18	7~9	5~7	4~6			17~20
Roughness	μmRa	2.8	1.4	1.1	0.9			3.0

Property of Kent USA
Do Not Reproduce

WCUT Machning Data Sheet

Wire Dia. and Type	Material Type	Material Thickness
0.25 ㎜ Brass	Aluminium	150 ㎜

Cutting Process		Stable Rough cut	Skim1	Skim2	Skim3			Max Rough cut
EDM Number	NO							
ON TIME	T.ON	16	6	4	3			18
OFF TIME	T.OFF	11	12	11	9			12
ARC ON	A.ON	14	5	3	2			14
ARC OFF	A.OFF	13	14	13	9			14
Servo Voltage	S.V	40	45	45	45			40
Wire Tension	W.T	8	12	12	12			8
Wire Feed	W.F	13	13	13	13			13
Water Flow Rate	W.F.R	7	0	0	0			7
G94F	FEED	0.7	2.0	3.4	3.4			0.8
FEED%	F.R	100	100	100	100			100
Upper Nozzle Gap		0.2	0.2	0.2	0.2			0.2
Lower Nozzle Gap		0.2	0.2	0.2	0.2			0.2
Liquid Quantity （KΩ-㎝）		50~55	50~55	50~55	50~55			50~55
OFFSET No （D）		00	01	02	03			00
Rough cut		0.220	---------	---------	---------			0.222
Rough cut&1 Skim		0.264	0.164	---------	---------			---------
Rough cut&2 Skim		0.283	0.177	0.159	---------			---------
Rough cut&3 Skim		0.288	0.185	0.168	0.158			---------
OFFSET Difference		---------	0.103	0.017	0.010			---------
RESULTS								
Cutting Feed Rate（㎜/min）		0.66~0.72	1.95~2.15	3.35~3.55	3.35~3.55			0.76~0.82
Gap Voltage（GV）		39~48	46~53	48~56	50~59			41~50
Finish Surface	μmRmax	15~18	7~9	5~7	4~6			17~20
Roughness	μmRa	2.8	1.4	1.1	0.9			3.0

Property of Kent USA
Do Not Reproduce