KENT USA®
Since 1979

KTM-VH500EVS

Combination Horizontal and Vertical Mills

Operation Manual

Property of Kent Industrial USA
Do Not Reproduce

www.kentusa.com | 1.800.KENT.USA

CONTENTS

1.Outline of machien..... Page

1-1 Appearance 1
1-2 Specifications..... 3
1-3 Table dimension..... 4

2.Installation and preparation..... 5

2-1 Transportation of the machine..... 6
2-2 Inspection and cleaning..... 6
2-3 Foundation 6
2-4 Installation 6
2-5 Maintenance and inspection 5
2-6 Cutting oil 7
2-7 Lubrication 7

3.Handling the main operation parts 14

3-1 Name of each part 14
3-2 Electric operation panel..... 15
3-3 Chang of vertical spindle speed 15
3-4 Chang of horizontal spindle speed..... 16
3-5 Spindle feed 17
3-6 Spindle speed range..... 18
3-7 Vertical Spindle head swivelling..... 18
3-8 Swivelling of overarm on horizontal plane 19
3-9 Overarm transverse movement..... 19
3-10 Swivel to horizontal (set horizontal arbar) 20
3-11 Parts name of machine 20
3-11-1 Operation of manual feeding 21
3-11-2 Operation of cross feed 21
3-11-3 Operation of table vertical repid traverse 21
3-11-4 Z axis feed range selection 21
3-11-5 Operation of table longitudinal power feed 21
3-11-6 X-Y axis feed range selection..... 21
3-11-7 Saddle gib adjustment 22
3-11-8 Table gib adjustment 22
3-11-9 Knee-saddle gib adjustment..... 23

Property of Kent Industrial USA
Do Not Reproduce

3-11-10 .Safety devices 24
(1) Thermal relay 24
(2) Fuse 24

4.Handling the main operation parts(500VS) 25
4-1 Name of each part..... 25
4-2 Electric operation panel 26
4-3 Chang of vertical spindle speed 26
4-4 Spindle brake 27
4-5 Spindle speed range 29
4-6 Vertical Spindle head swivelling 29

5.Symbols 31

6.Suggested starting speeds and feeds 32
6-1 Carbide cutters 32
6-2 High speed steel cutters 33

7.Preventive maintenance 34
Maintenance 35
Trouble shooting 41
Parts List 47
Inspection report 69

Property of Kent Industrial USA
Do Not Reproduce

1-1 APPEARANCE(VH500S, VH500VS, VH500EVS)

S:1/15
5000P279

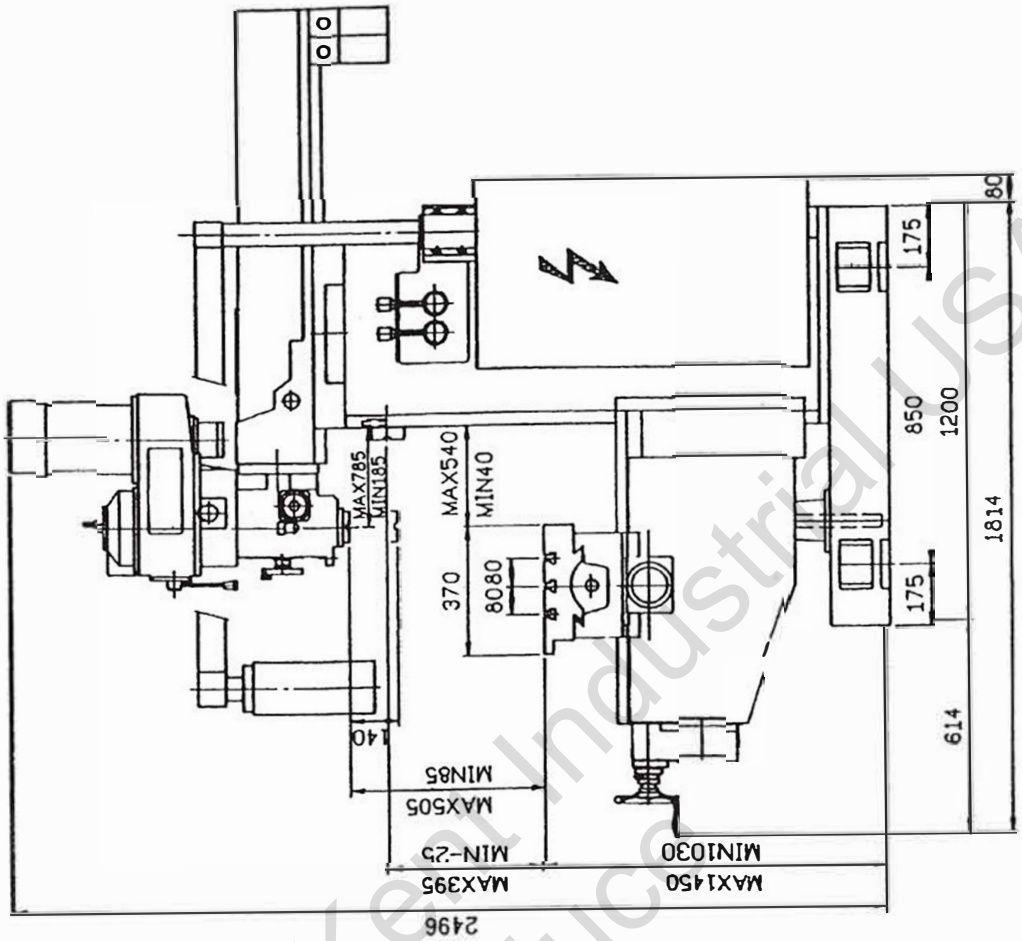

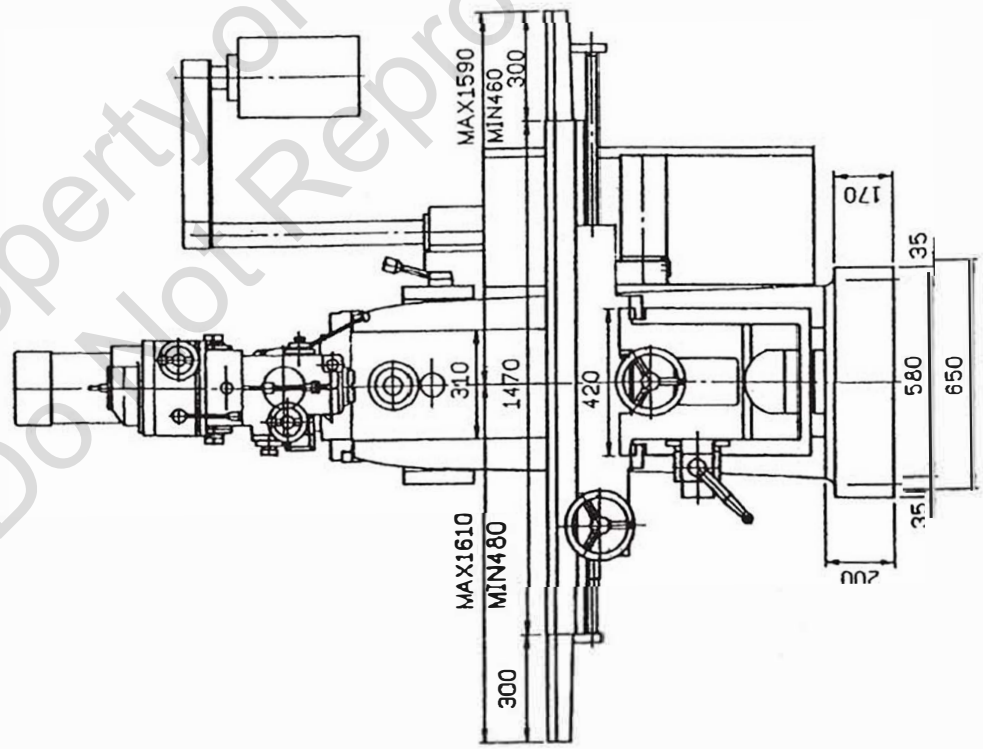

Fig-1

Property of Kent Industrial USA
Do Not Reproduce

1-1 APPEARANCE(500S, 500VS, 500EVS)

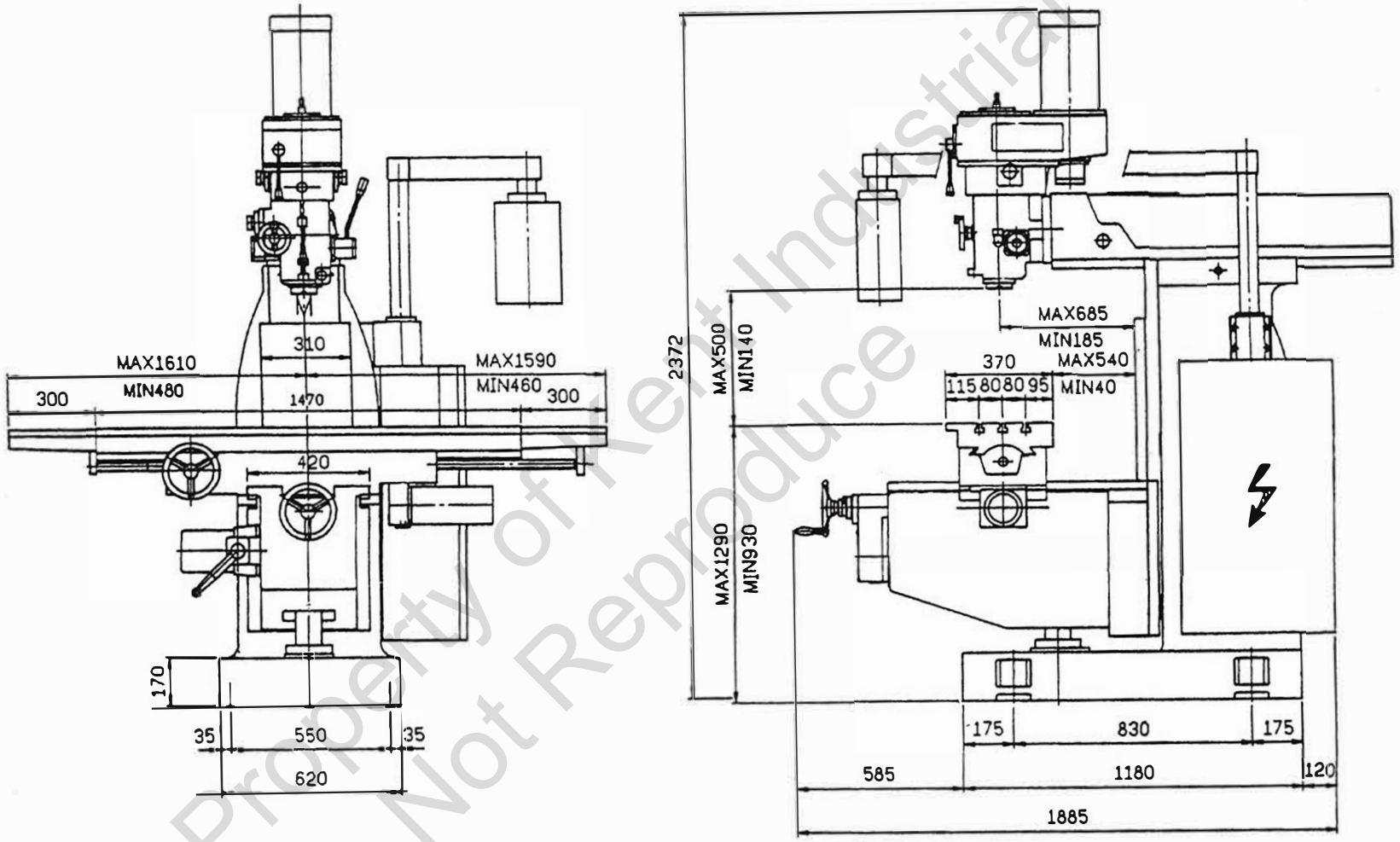

FIG-1

S:1/15
5000P279

Property of Kent Industrial USA
Do Not Reproduce

1-2 SPECIFICATIONS

UNIT: MM 60HZ

ITEMS		VH500S	VH500VS	VH500EVS
TABLE	TABLE SIZE	1270x370(1470x370 OPT.)		
	TRAVEL(XxYxZ)-MANUAL	930x520x440		
	TRAVEL(XxYxZ)-AUTO	920x500x420		
	TSLOT(WxNO.xPITCH)	18x3x80		
	FEED(LONG)/ MIN	30-3000 VARI.		
	FEED(CROSS)/MIN	30-3000 VARI.		
	VERTICAL/MIN	1150(30-3000VARI.OPT.)		
VARTICAL SPINDLE	SPINDLE NOSE	N.S.T 40		
	SPINDLE SPEED RPM	75-3600	90-4200	60-3600
	STEPS	16	VARIABLE	INV. VARIABLE
	SPINDLE NOSE TO TABLE	85-505		
	SPINDLE CENTER TO COLUMN FACE	185-785		
	QUILL FEEDS /REV	0.035/0.07/0.14		
	QUILL TRAVEL	140		
	SWIVELLING ANGLE	45° (R&L)		
	CROSS TRAVEL OF RAM	600		
HORIZONTAL SPINDLE	SPINDLE NOSE	N.S.T 40		
	SPINDLE SPEED RPM	65-1500		
	STEPS	9		
	SPINDLE TO BOTTOM OF RAM	175		
	SPINDLE CENTER TO TABLE TOP	-25~395		
MOTOR	VERTICAL SPINDLE	5HP-4P	5HP-4P	5HP-4P INV.
	HORIZONTAL SPINDLE	5HP-4P		
	FEED X,Y AXIS	AC SERVO 750W		
	FEED Z AXIS	1HP-12P(AC SERVO 850W OPT.)		
	COOLANT PUMP	1/8HP-2P		
SIZE	MACHINE(LxWxH)	2070x1900x2496		
	NET WEIGHT (KGS)	2550	2600	2650
* SPECIFICATIONS MAY BE CHANGED OR IMPROVED WITHOUT NOTICE.				

ITEMS		500S	500VS	500EVS
TABLE	TABLE SIZE	1270x370(1470x370 OPT.)		
	TRAVEL(XxYxZ)-MANUAL	930x520x360		
	TRAVEL(XxYxZ)-AUTO	920x500x360		
	TSLOT(WxNO.xPITCH)	18x3x80		
	FEED(LONG)/ MIN	30-3000 VARI.		
	FEED(CROSS)/MIN	30-3000 VARI.		
	VERTICAL/MIN	1150(30-1150VARI.OPT.)		
VARTICAL SPINDLE	SPINDLE NOSE	N.S.T 40		
	SPINDLE SPEED RPM	75-3600	90-4200	60-3600
	STEPS	16	VARIABLE	INV. VARIABLE
	SPINDLE NOSE TO TABLE	140-500		
	SPINDLE CENTER TO COLUMN FACE	185-685		
	QUILL FEEDS /REV	0.035/0.07/0.14		
	QUILL TRAVEL	140		
	SWIVELLING ANGLE	45° (R&L)		
	CROSS TRAVEL OF RAM	500		
MOTOR	VERTICAL SPINDLE	5HP-4P	5HP-4P	5HP-4P INV.
	FEED X,Y AXIS	AC SERVO 750W		
	FEED Z AXIS	1HP-12P(AC SERVO 850W OPT.)		
	COOLANT PUMP	1/8HP-2P		
SIZE	MACHINE(LxWxH)	2070x1885x2372		
	NET WEIGHT (KGS)	2200	2250	2250
SPECIFICATIONS MAY BE CHANGED OR IMPROVED WITHOUT NOTICE.				

500P273A

Property of Kent Industrial USA
Do Not Reproduce

Fig-2 Table dimensions

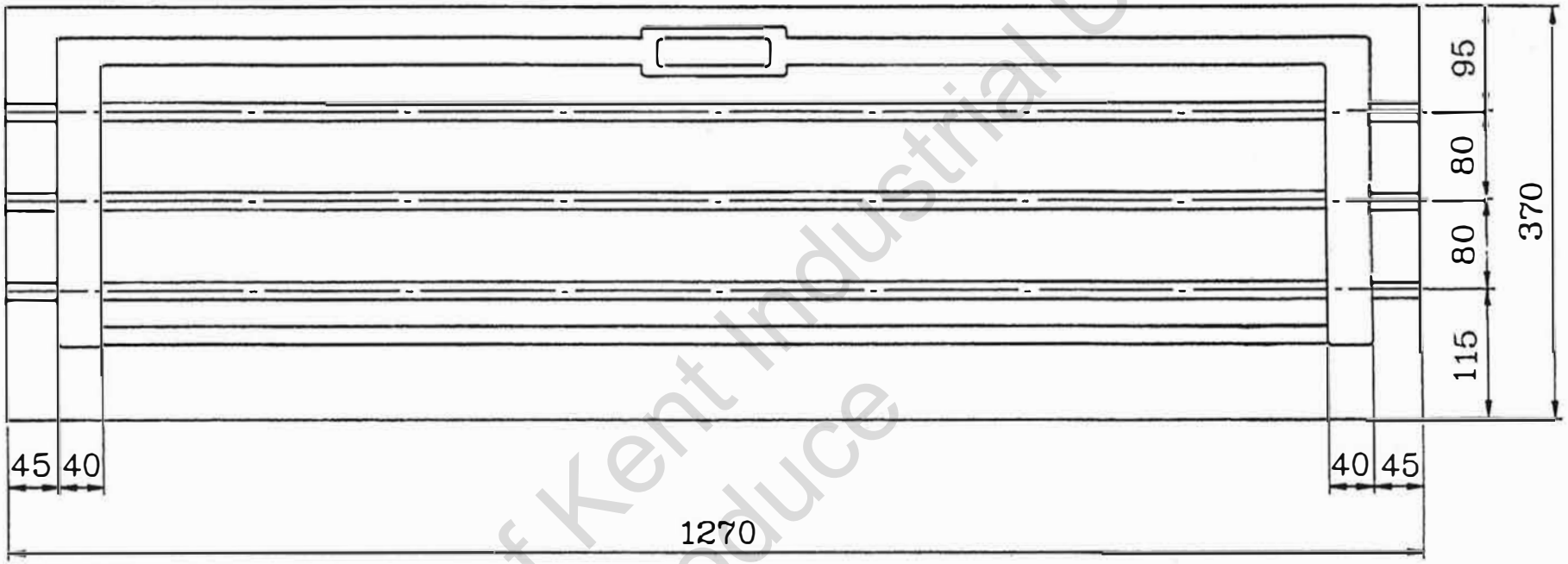

T-slots dimensions

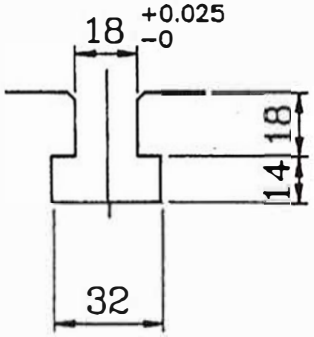

5000P274
S:1/6

Property of Kent Industrial USA
Do Not Reproduce

2. Installation

2-1 Transportation of the machine

This machine weight approximate 2700 kgs (5940 lbs) unpack wooden case. Loosen the 4 bolt from the skid. move the vertical head in vertical position, remove the ram forward to proper position (Fig-4) then lifting machine.

NOTE:

Before lifting machine, check machine in steady and safety condition. Also insert clothes or pieces of wood where wires touched. The machine to absorb impacts which may influence of machine.

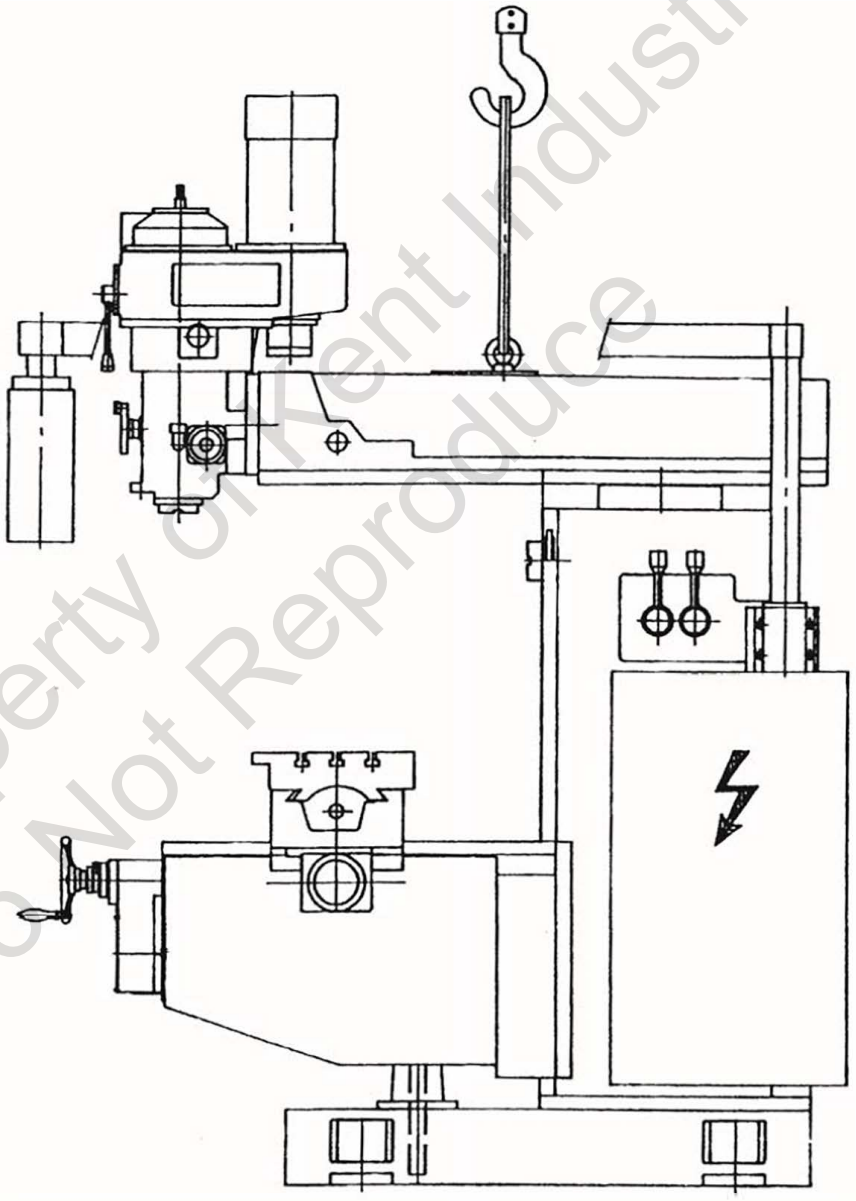

Fig-4

Property of Kent Industrial USA
Do Not Reproduce

2-2 Inspection and cleaning

When the machine is delivered, check for damage or shortages in the number of attachments. Then wipe off dirt and protective coating.

2-3 Foundation

Before installation, construct a foundation of sufficient thickness (normally 450 mm) and pressure-supporting area (depending on the nature of the ground at the installation site) according to the floor plan introduced in Fig.5.However, if the installation site has a concrete floor of sufficient strength, the construction of a foundation is unnecessary. When installing, achieve leveling by using anchor bolts and wedges or by using a precision level in combination with wedges or leveling blocks.

2-4 Installation

On the bottom of the machine base, dollies are provided at four corners as shown in(Fig-5) The machine should be balanced on the four points.

2-5 Maintenance and Inspection

(1) Precautions for operation

1) Always supply lubricating oil to designated oiling points befor starting. Table 1. for your reference.
2) Confirm that the work and setting jigs do not strike anything before actuating table feed.
3) The power table longitudinal feed should not exceed the range limitations of the machine. Always set the automatic reversing dog on both sides within the moving range.

(VH500S, VH500VS, VH500EVS)

Foundation:

Fig-5

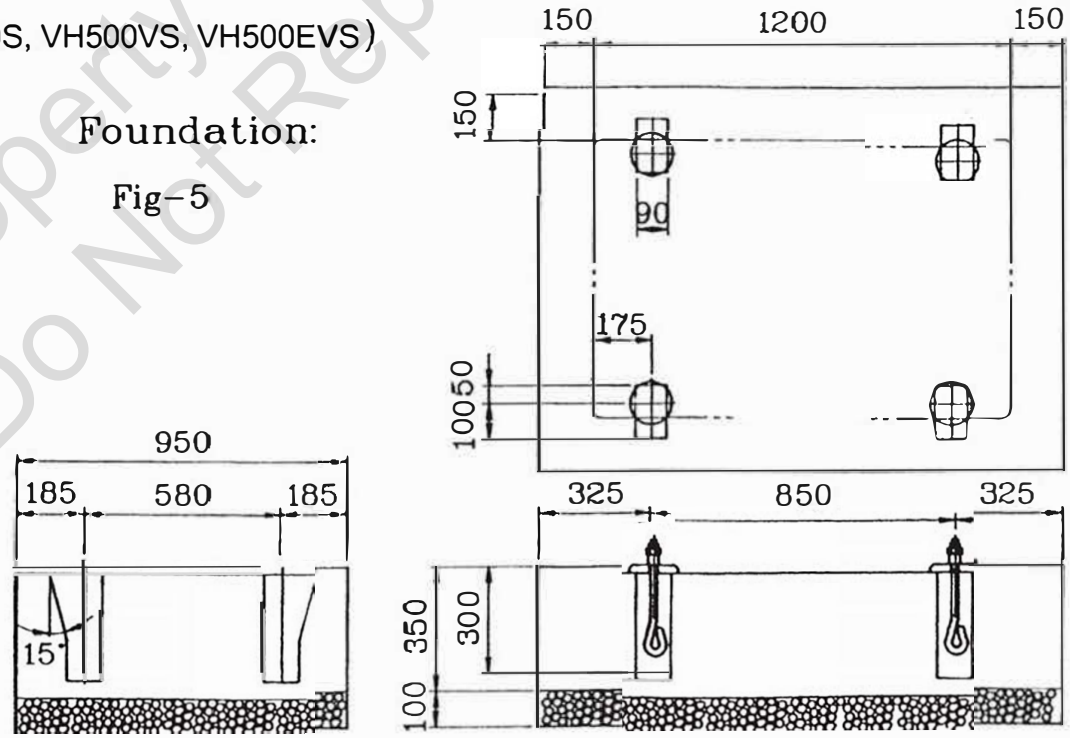

Property of Kent Industrial USA
Do Not Reproduce

S:1/18
5000P275

(500S, 500VS, 500EVS)

Foundation:

FIG-5

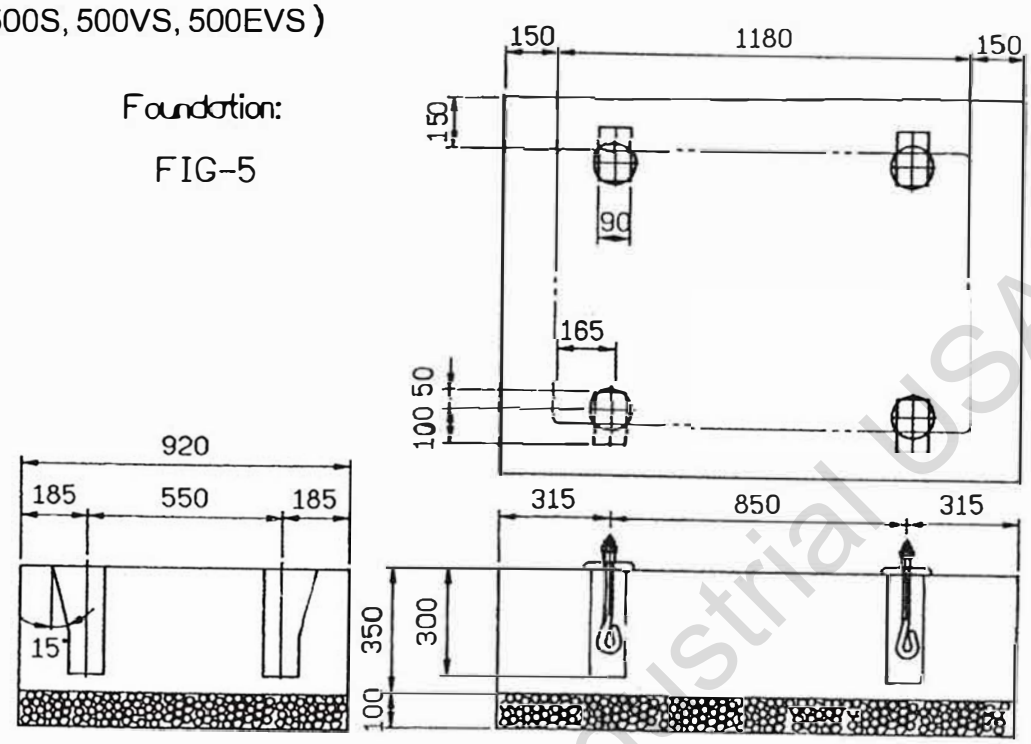

2-6 Cutting oil

There are two general types of cutting oil, i.e., water-soluble cutting oil and water-insoluble cutting oil, and these are further divided into many groups. As selection of the cutting oil depends on each cutting condition, particular trade names or groups cannot be specified here but it is necessary to observe the following:

(1) Use of water-insoluble cutting oil

Examples:	Mineral oil	light oil, machine oil and spindle oi
	Animal and vegetable oil	Lard, olive oil, colza oil, soybean oi castor oil.

(2) Capacity of the cutting oil tank is about 8 gallon.

(3) Cutting oil should be supplied through an oil strainer into the cutting oil intake provided on the lower part of the column.

2-7 Lubrication

Prior to starting, each moving part must be lubricated with suitable lubricating oil. Refer to table.1 for instructions to lubricate the spindle head gears, quill and slide ways.

The lubrication oil to be used for each part is also listed in Tables 2 , and 3. It can be used for selecting the correct lubricant to keep the machine in its best condition.

Property of Kent Industrial USA
Do Not Reproduce

Table-1

LUBRICATION INSTRUCTIONS (VH500S, VH500VS, VH500EVS)

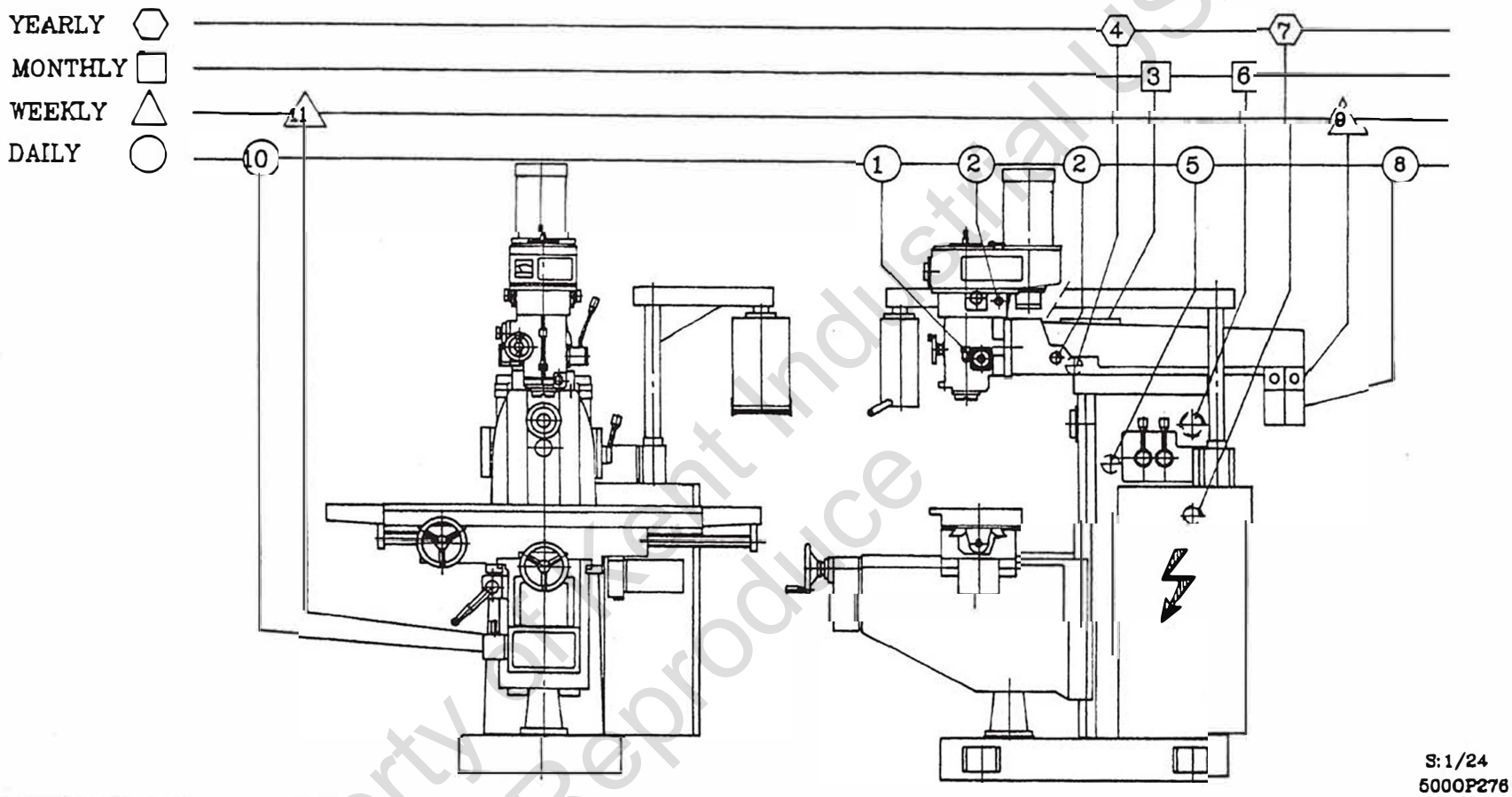

	Spindle	Spindle gears (V)			Spindle gears(H)			Arbor support		Slide ways	
Machine components	1	2	3	4	5	6	7	8	9	10	11
Check		Daily			Daily			Daily		Daily	
Fill	Daily		Monthly			Monthly			Weekly		Weekly
Clean & Replace				Yearly			Yearly				
Lubricant	CB68	CB68			CB68			G68		G68	
Capacity	0.04L		4L			40L			0.5L		2L
Remarks											

Property of Kent Industrial USA
Do Not Reproduce

LUBRICATION INSTRUCTIONS (500S, 500VS, 500EVS)

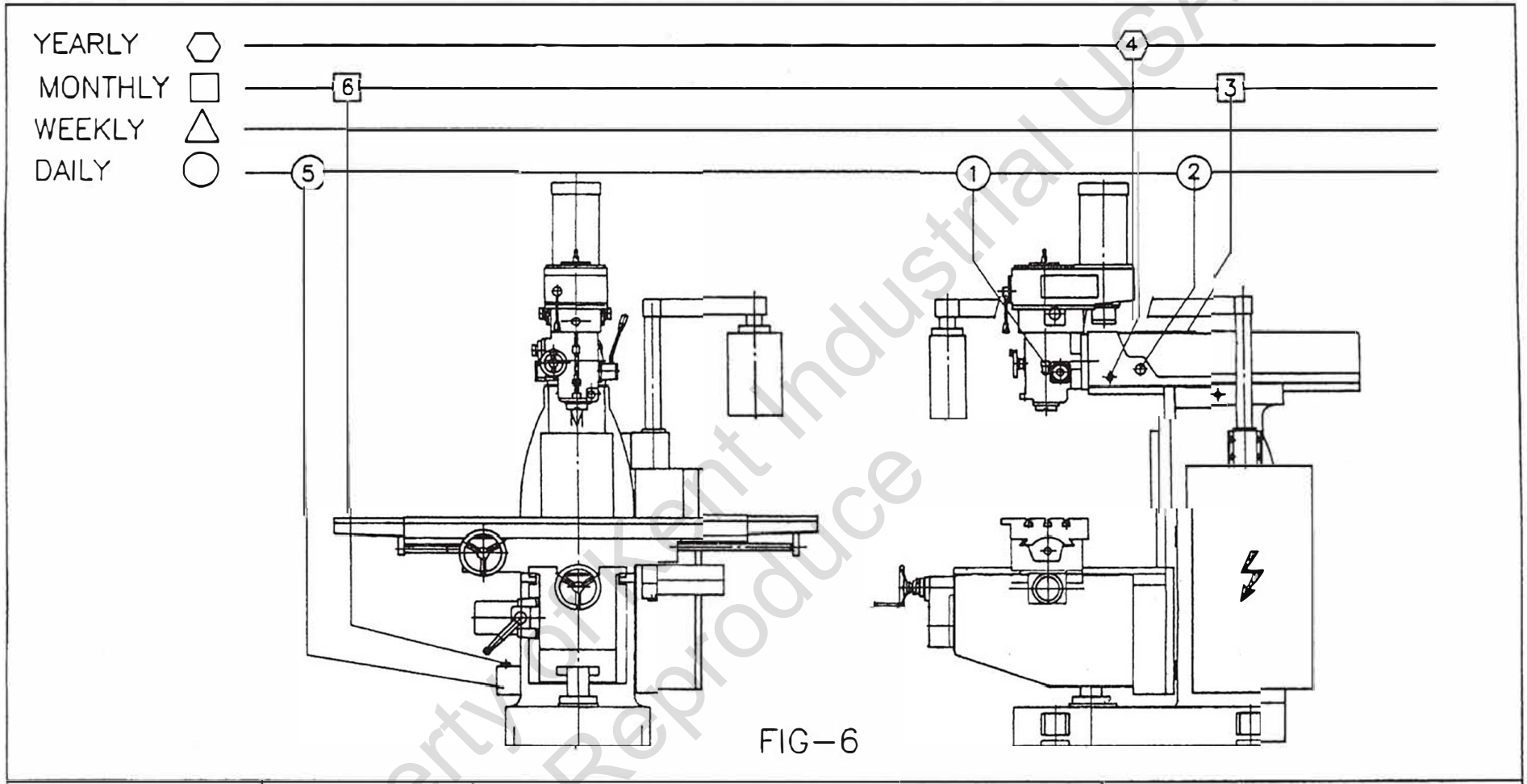

FIG–6

	Spindle quill(V)	Spindle gears (V)			Slide ways	
Mochine components	1	2	3	4	5	6
Check		Daily			Daily	
Fill	Daily		Monthly			Monthly
Clean & Replace				Yearly		
Lubricant	CB68	CB68			CB68	
Capacity	0.04L		4L			2L
Remarks						500P276A S:1/18

Property of Kent Industrial USA
Do Not Reproduce

Table -2

Instruction for correct lubricant

	Application Fields	Properties	Symbol and Viscosity Grade	Kinematic Viscosity CST (130°F) Mean.	min.	max.	REMARKS
GEARS	Enclosed moderately loaded gear (spur gear, bevel gear)	Refined mineral oils with good oxidation stability	CB 32 CB 68 CB 150	32 68 150	28.8 61.2 135	35.2 74.8 165	Pinion speeds (motor output) 2,000 – 5,000 rpm (within 5HP) 1,000 – 2,000 rpm (within 10HP) – 1,000 rpm (within 20HP)
	Enclosed heavily loaded gears (worm and wheel)	Refined oils with good oxidation stability and with improved load-carrying ability	CC 150 CC 320 CC 460	150 320 460	135 288 414	165 352 506	Worm speeds 2,000 – rpm 1,000 – 2,000 rpm – 1,000 rpm
BEARINGS	Spindles bearings and associated clutches	Refined mineral oils with superior anticorrosion and anti-oxidation performances.	FC 2 FC 10 FC 22	2.2 10 22	1.98 9.00 19.8	2.42 11.0 24.2	Shaft speeds (shaft dia.) 10,000 – rpm (1/8 in) 2,000 – 10,000 rpm (1/8 – 5-7/8in) – 2,000 rpm (5-7/8in)
SLIDE WAYS	Slide ways	Refined mineral oils with improved lubricity and tackiness performance preventing stick-slip	G 68 G 220	68 220	61.2 198	74.8 242	Slide way (surface pressure) Horizontal (under 5Ib/in^2) Vertical (under 5Ib/in^2)
HYDRAULIC SYSTEMS	Hydraulic systems	Refined mineral oils with superior anti-corrosion and anti-oxidation performance	HL 32 HL 68	32 68	28.8 61.2	35.2 74.8	Oil temperature (Rated pressure) 0 – 148°F (under 500Ib/in^2) 85 – 175°F (under 500Ib/in^2)
		Refined mineral oils with superior anti-corrosion, anti-oxidation and anti-wear performances.	HM 32 HM 68	32 68	28.8 61.2	35.2 74.8	Oil temperature (Rated pressure) 0 – 148°F (under 2000Ib/in^2) 85°F – 175°F (under 2000Ib/in^2)
	Hydraulic and Slide ways	Refined mineral oils of HM type with anti-stick-slip properties	HG 32 HG 68	32 68	28.8 61.2	32.2 74.8	Oil temperature (Rated pressure) 0 – 148°F (under 1000Ib/in^2) 85°F – 175°F (under 1000Ib/in^2)
GREASE		Premium quality greases with superior anti-oxidation and anti-corrosion properties	XM 1 XM 2	Viscosity (102°F) SSU 310 – 340 265 – 295			Centralized systems Cup or hand gun

Property of Kent Industrial USA
Do Not Reproduce

Table 3 The general lubricants for machine tool

	SYMBOL	CPC	ESSO/EXXON	SHELL	MOBIL	DAPHNF
Gears	CB 32 CB 68 CB 150	R 32 R 68 R 150	Teresso 32 Teresso 68 Teresso 150	Tellus Oil C 32 Tellus Oil C 68 Tellus Oil C 150	DTE Oil Light DTE Oil Heavy Medium DTE Oil Extra Heavy	Mechanic Oil 32 Mechanic Oil 68 Mechanic Oil 150
	CC 150 CC 320 CC 460	R 150 R 320 R 460	Spartan EP 150 Spartan EP 320 Spartan EP 460	Omala Oil 150 Omala Oil 320 Omala Oil 460	Gear 629 Gear 632 Gear 634	CE Compound 150S CE Compound 320S CE Compound 460S
Bearings	FC 2 FC 10 FC 22	 R 12 R 22	 Spinesso 10 Spinesso 22	High spin oil C2 Tellus Oil C 10 Tellus Oil C 22	Velocite Oil No. 3 Velocite Oil No. 6 Velocite Oil No. 10	Mechanic Oil 2 Mechanic Oil 10 Mechanic Oil 22
Slide Ways	G 68 G 220	Slide way oil Slide way oil	Febis K 68 Febis K 220	Tonna T 68 Tonna T 220	Vactra Oil No. 2 Vactra Oil No. 4	Multiway 68C Multiway 220C
Hydraulic System	HL 32 HL 68 HM 32 HM 68 HG 32 HG 68	R 32 R 68 32 AW 68 AW — —	Teresso 32 Teresso 68 Nuto HP 32 Nuto HP 68 Powerex DP 32 Powerex DP 68	Tellus Oil C 32 Tellus Oil C 68 Tellus Oil 32 Tellus Oil 68 Tonna Oil T 32 Tonna Oil T 68	DTE Oil Light DTE Oil Heavy Medium DTE 24 DTE 26 Vacuoline Oil 1405 Vacuoline Oil 1408	Hydraulic Fluid 32 Hydraulic Fluid 68 Super Hydraulic Fluid 32 Super Hydraulic Fluid 68 Multiway 32 Multiway 68
Grease	XM 1 XM 2	Gulfcrown Grease E.P. No.1 Gulfcrown Grease E.P. No.2	Listan 1 Listan 2	Alvania Grease 1 Alvania Grease 2	Mobilux EP 1 Mobilux 2	Cornex Grease No. 1 Cornex Grease No. 2

C.P.C — China Petrolum Co., Ltd.

Property of Kent Industrial USA
Do Not Reproduce

KNEE LUBRICATION SYSTEM

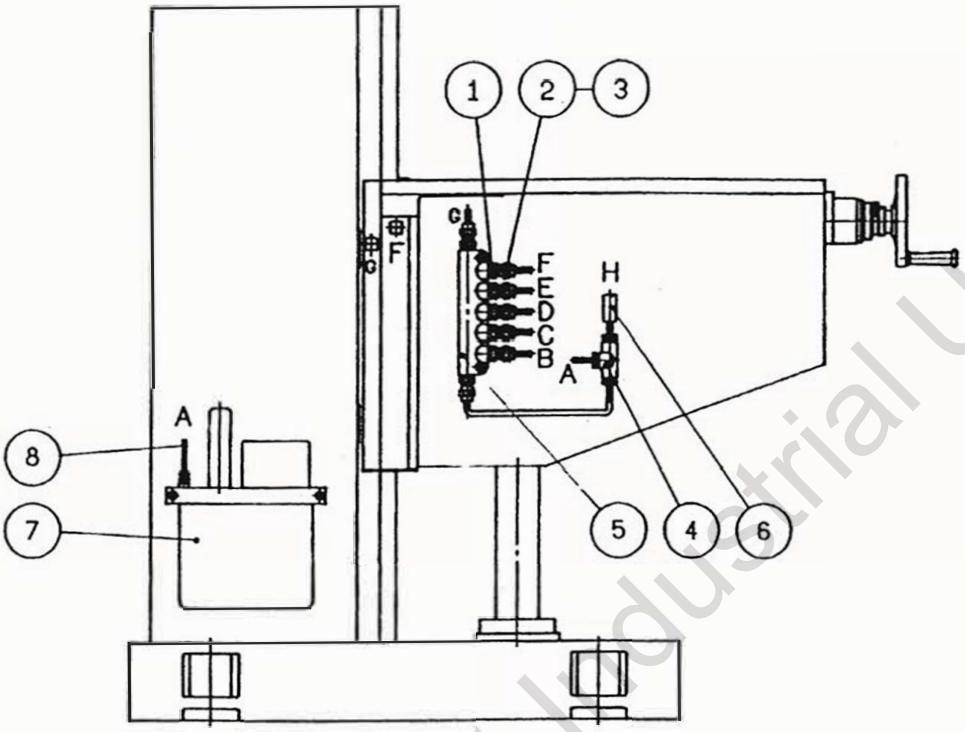

FIG- 6

H: TO SADDLE LUBRICATION SYSTEM
E: TO Z AZIS LEAD GEAR
D: TO KNEE RIGHT SIDE
C: TO KNEE RIGHT GIB HOLDER
B: TO Z AZIS LEAD SCREW

NO	PART NAME	SPECIFICATION	QTY
1	JOINT OF RATIO DISTRIBUTION CONTROLLER	PSB5	6
2	SET PLUG	PA4	13
3	SLEEVE	PB4	13
4	T-JOINT	PKD4	1
5	DISTRIBUTOR	AE-5	1
6	OUTSIDE STEEL WIRE SOFT TUBE	ø4x700L	1
7	LUBRICATION PUMP	SMA-601-15	1
8	OUTSIDE STEEL WIRE SOFT TUBE	ø4x700L	1

S:1/3
5000P135

Property of Kent Industrial USA
Do Not Reproduce

SADDLE LUBRICATION SYSTEM

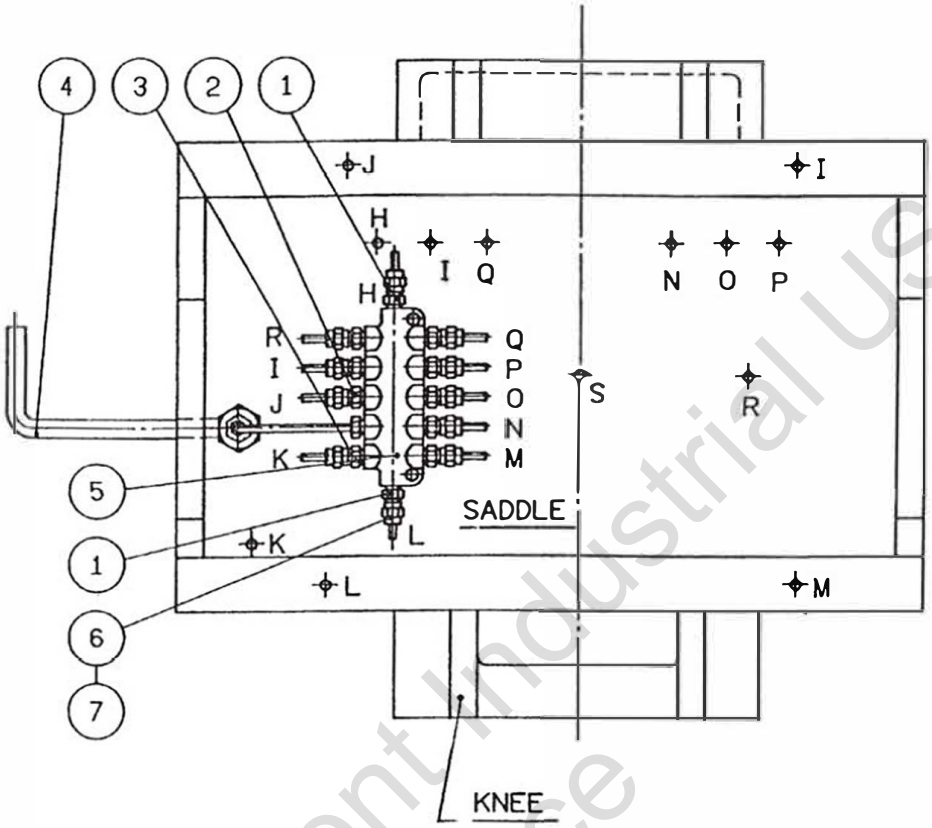

FIG-3

R: TO X AXIS LEAD SCREW
S: TO Y AXIS LEAD SCREW
K: TO X AXIS HANDLE GEAR

NO	PART NAME	SPECIFICATION	QTY
1	JOINT OF RATIO DISTRIBUTION CONTROLLER	PSB4	2
2	JOINT OF RATIO DISTRIBUTION CONTROLLER	PSB5	8
3	JOINT OF RATIO DISTRIBUTION CONTROLLER	PSB3	1
4	OUTSIDE STEEL WIRE SOFT TUBE	Ø4x500L	1
5	DISTRIBUTOR	DA-12	1
6	SET PLUG	PA4	15
7	SLEEVE	PB4	15

5000P134
S:1/3

Property of Kent Industrial USA
Do Not Reproduce

3:HANDING THE MAIN OPERATION PARTS

3–1 Name of each part (head stock) (VH500EVS)

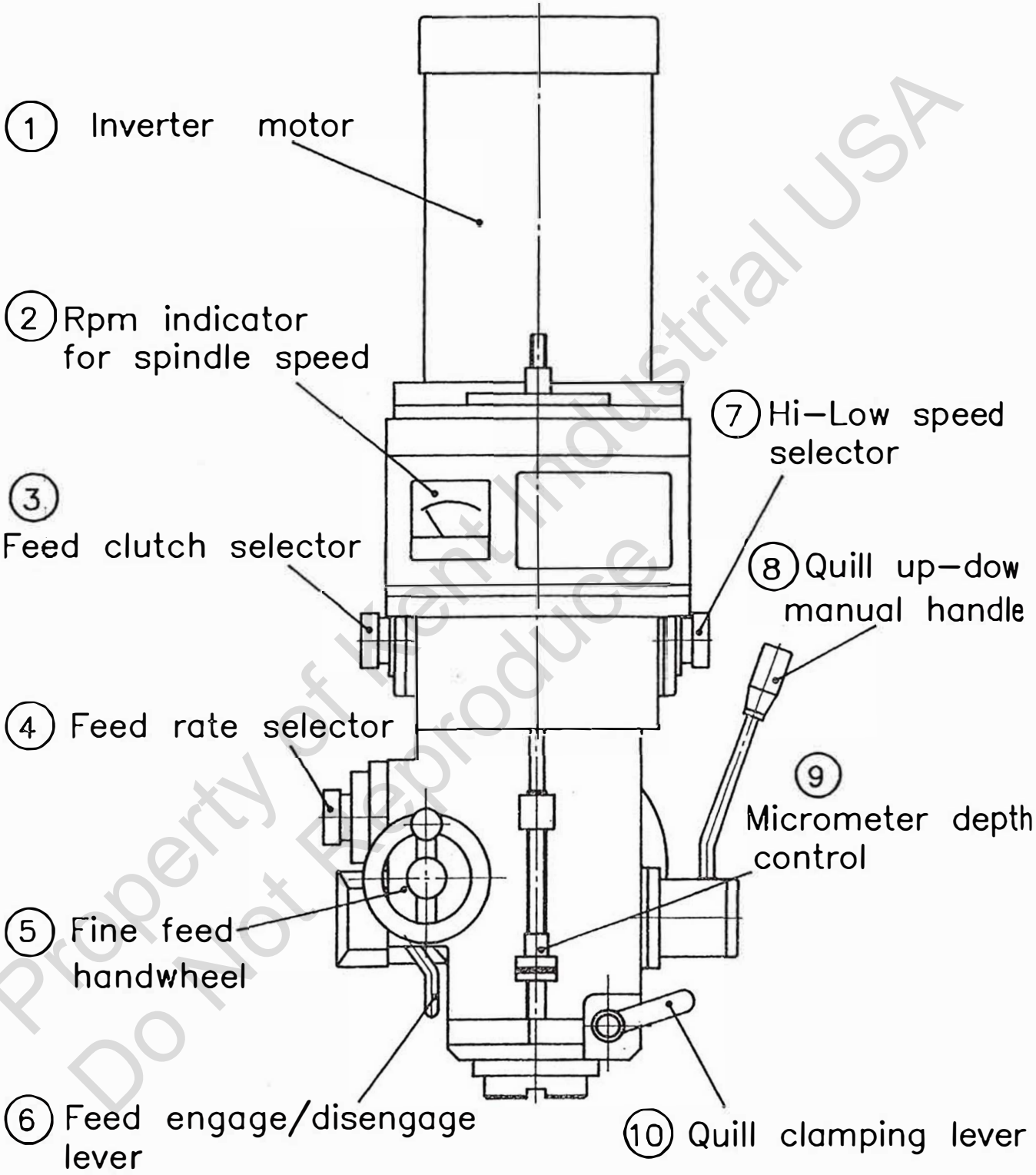

Fig–8 INVERTER SPEED

Property of Kent Industrial USA
Do Not Reproduce

3-2 Electric operation panel (500EVS) (VH500EVS)

1: Spindle break
2: Start & lamp
3: Spindle forward
4: Spindle revers
5: Coolant pump
6: Horizontal start
7: X-Y selector switch
8: X-Y axis rapid
9: Z axis rapid
10: Emergency
11: Verticale spindle freouency adjusting
12: Spindle & horizontal stop
13: X-Y feed motor freouency adjusting
14: Z axis up-down
15: Z axis feed motor freouency adjusting
16: XYZ axis manual/auto selector switch

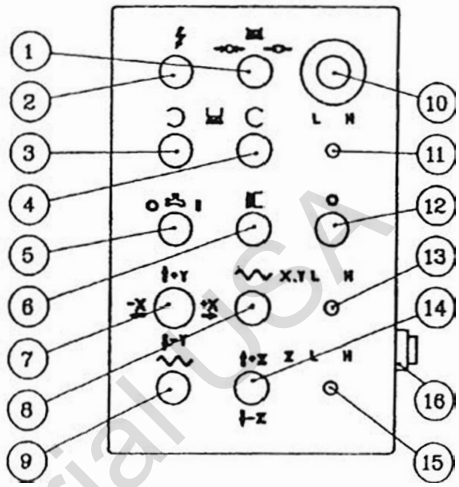

Fig-10

3-3 Change of vertical spindle speed

Check if the hi-low speed selector (Fig10-11) in the correct poition as needed. Then press the spindle high-low speed (Fig 8-2) or (Fig 8-2) ,spindle can be rotated in the correct direction.

The vertical spindle speed should be chosen according to work piece material, cutter diameter and cutter material table 5 and 6 for your reference.

To change the vertical spindle speed operate the high-low speed selector (Fig 8-7) and rotating speed select handwheel (Fig10-11) spindle speed can be read out from the indicator.

Hi-low speed slecting:(Do not operate the hi-low speed selector (Fig 8-7) when spindle is running) stop spindle first, then rotate selector to the high or low position as selected. (if can not be rotatd, please rotateing the spindle slightly by hand) Then press the vertical spindle **forw- revers** speed. (Fig10-3) (Fig10-4)

Property of Kent Industrial USA
Do Not Reproduce

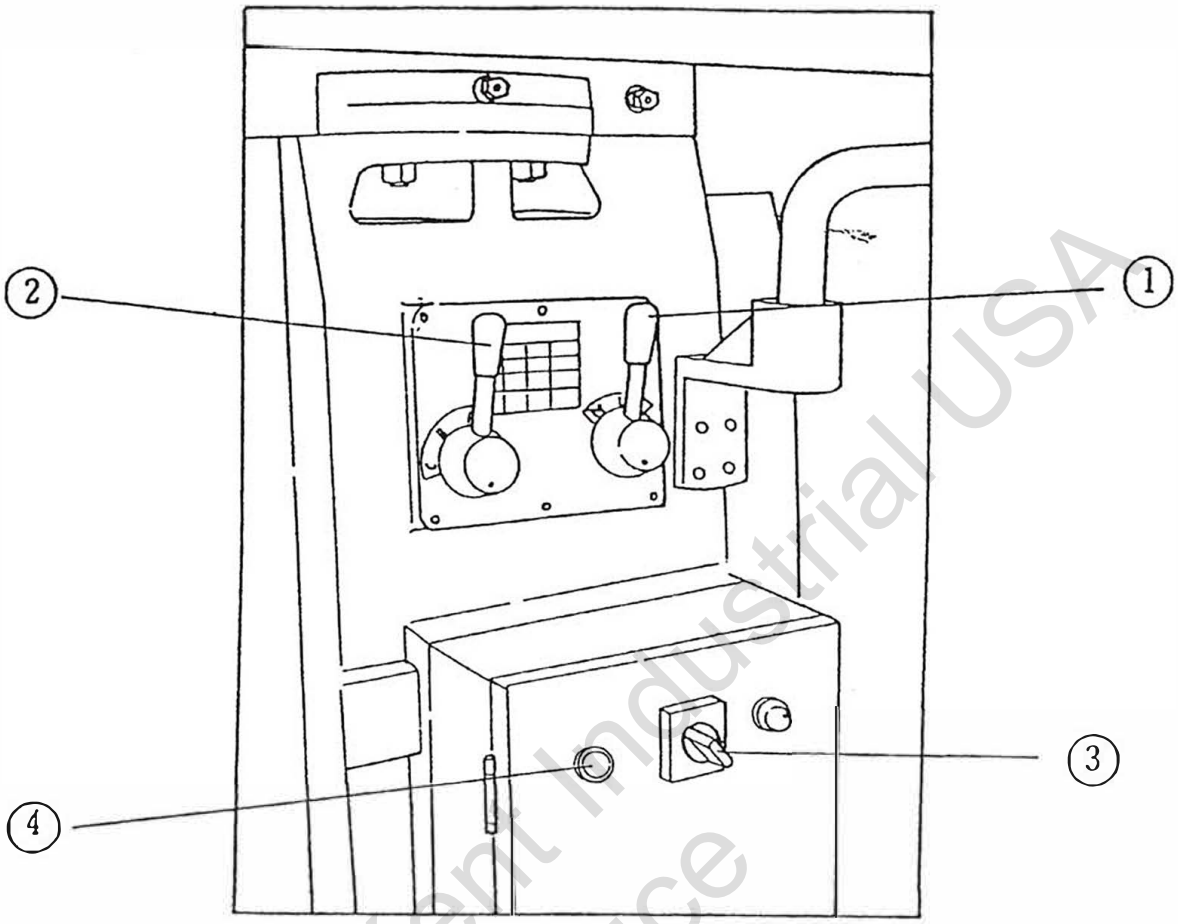

Fig-7

3-4 Change of horizontal spindle speed

Move lever Fig 7-1 to position L.M.OR H depending upon the spindle speed range required, and move lever Fig 7-2 the position A.B OR C particular speed required.

Speed changes must not be made while the main motor is running. To facilitate changing spindle speed, stop both main and feed motors by depressing "Red" emergency stop button Fig 6-9 turn spindle direction switch Fig 7-3 to position forward or reverse and then intermittently press the yellow inching button Fig 7-4 on side of box, at the same time moving lever Fig 7-1,7-2 until the required gears are engaged. It should be noted that as a safety measure the feed motor will automatically stop when the inching button is operated.

Property of Kent Industrial USA
Do Not Reproduce

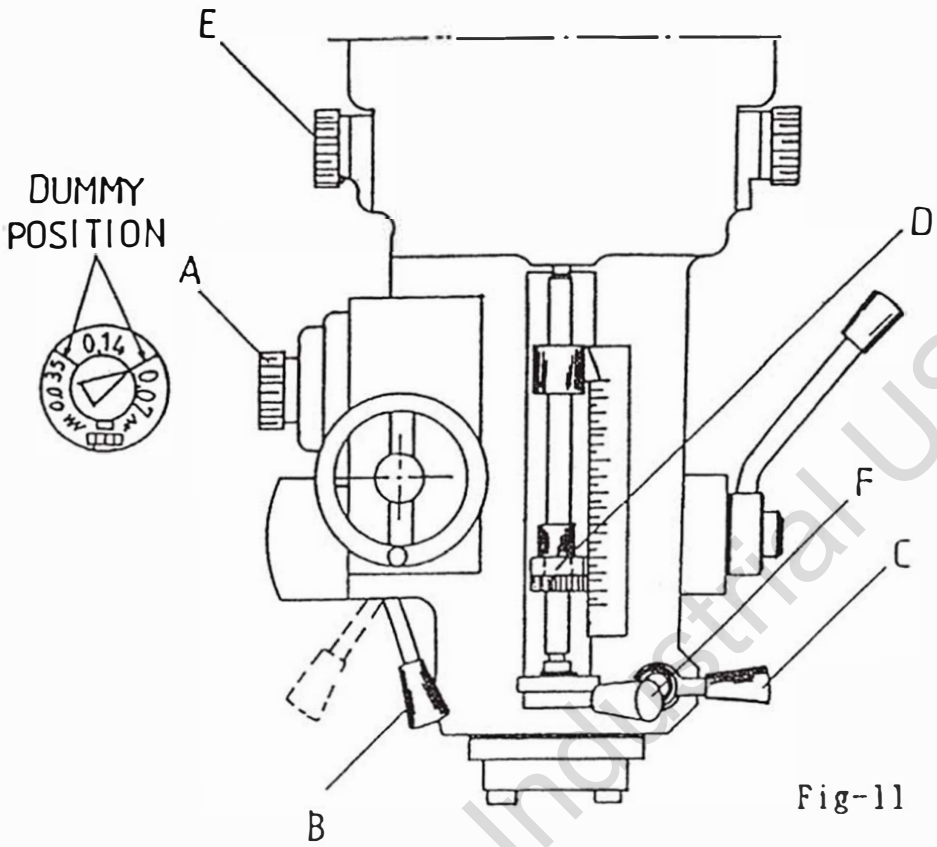

Fig-11

3-5 Spindle feed

a).FINE HAND FEED

1. Turn the feed rate selector (A) to any of the two "Dummy" position.
2. Engage Feed Trip Lever (B).
3. The Quill is now under handwheel control.

b).POWER FEED

Maximum looding 1" (25mm) dia solid drill in steel.

1. Ensure quill lock is off,(C).
2. Set micrometer dia to required depth, (D).
3. Engage Feed Clutch Selector, (E).
4. Select feed rate, (A).
5. Engage feed trip lever, (B).
6. The feed will automatically trip out at a depth within 0.2mm (±0.01").

NOTE : To interrupt Power Feed, just press down the dis-engageme lever (F).

Property of Kent Industrial USA
Do Not Reproduce

3-6 SPINDLE SPEED RANGE

c). Back Gearing

1. Brake the spindle.
2. Turn the H-L knob in either direction to the next horizontal position. You can feel the "Snap in" correct position through the ball-spring mechanism. (The H-L knob is of rotory type, so you can trun it to both directions)
3. If difficulty happened in meshing gears, inching the spindle through brake lever.

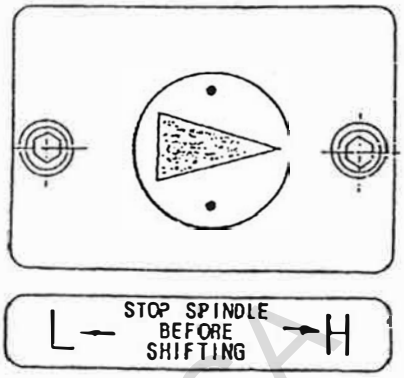

Fig-13

3-7 Vertical spindle head swivelling

Swivelling within the vertical plane of the spindle head is necessary when milling slanted work. Swivel range from 0° to 45° is possible. The spindle head should be swivelled in the following manner:

1) Loosen the 4 bolts (Fig 14-1) at the rear of the spindle head rotation shaft.
2) Turn the spindle head swivelling worm (Fig14-2) with a wrench to swivel the spindle head to the required angle while observing the scale.
3) Tighten the 4 bolts after obtaining the required swivel.

Attention: Loosen 4 bolts only. Do not take off the bolts.

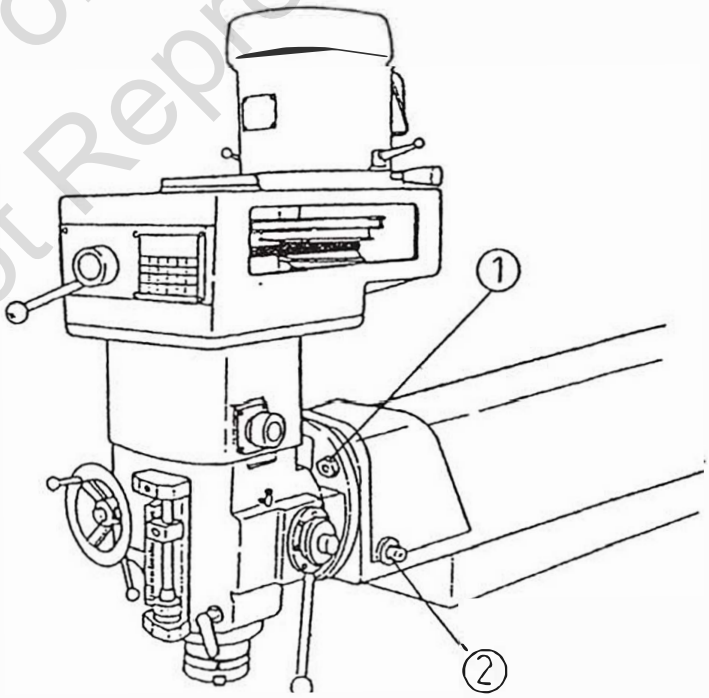

Fig-14

Property of Kent Industrial USA
Do Not Reproduce

3-8 Swivelling of overarm on horizontal plane

The overarm can be swivelled by turning the swivel base (Fig 15-2) located on the top of the column.

Procedure for horizontal swivelling:

1) Loosen the four bolts (Fig. 15-1) on the left and right which secure the swivel base to the column top.
2) Push the overarm for the required angle either to left or right to swivel.
3) After it has been swiveled to the required angle, secure the swivel base with the four bolts which were loosened previously.

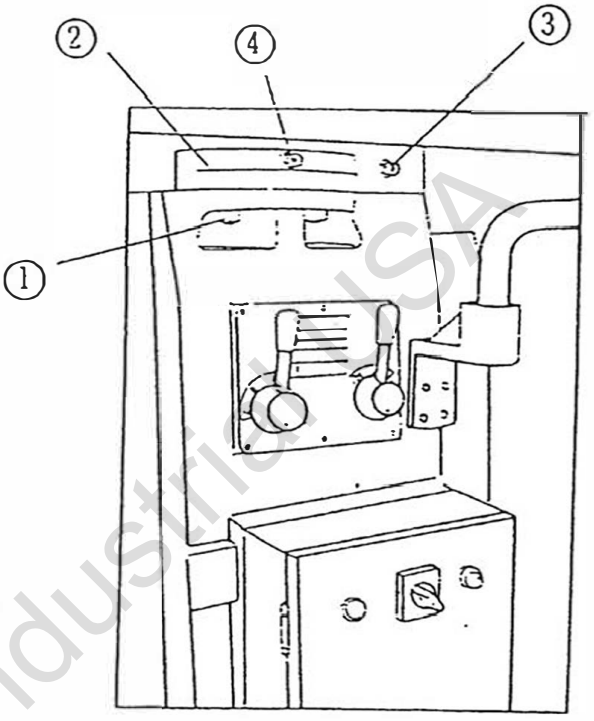

Fig-15

3-9 Overarm transverse movement

The overarm may be moved transversely within a range of about 500 mm.

This cross movement should be carried out in the following manners:

1) Loosen the 2 bolts.(Fig 15-3).
2) Move the overarm, transversely by turning the pinion rotation shfat (Fig 15-4) with a wrench.
3) Retighten the 2 bolts after obtaining the necessary movement to fix the overarm.

Property of Kent Industries USA
Do Not Reproduce

3-10 Swivel to horizontal (set horizontal arbor)

1. Remove the positioning taper pin from top of the swivel base.
2. Use spanner and unlock 4 bolt on top of column (Fig 15-1).
3. Swivel base to the correct position (Fig 15-2).
4. Insert the positioning taper pin.
5. Locking the 4 bolts, but do not tighten.
6. Set the long arbor then push two arbor support into arbor.
7. Tighten the taper pin and 4 bolts.

3-11 Parts name of machine

1. Spindle motor.
2. Milling head.
3. Control panel.
4. X axis servo motor.
5. Rpm indication for spindle.
6. Y axis clamp lever.
7. Knee handle.
8. Z axis clamp lever.
9. X axis clamp lever.
10. Y axis hand wheel.
11. X axis hand wheel.
12. Horizontal spindle speed selection lever.

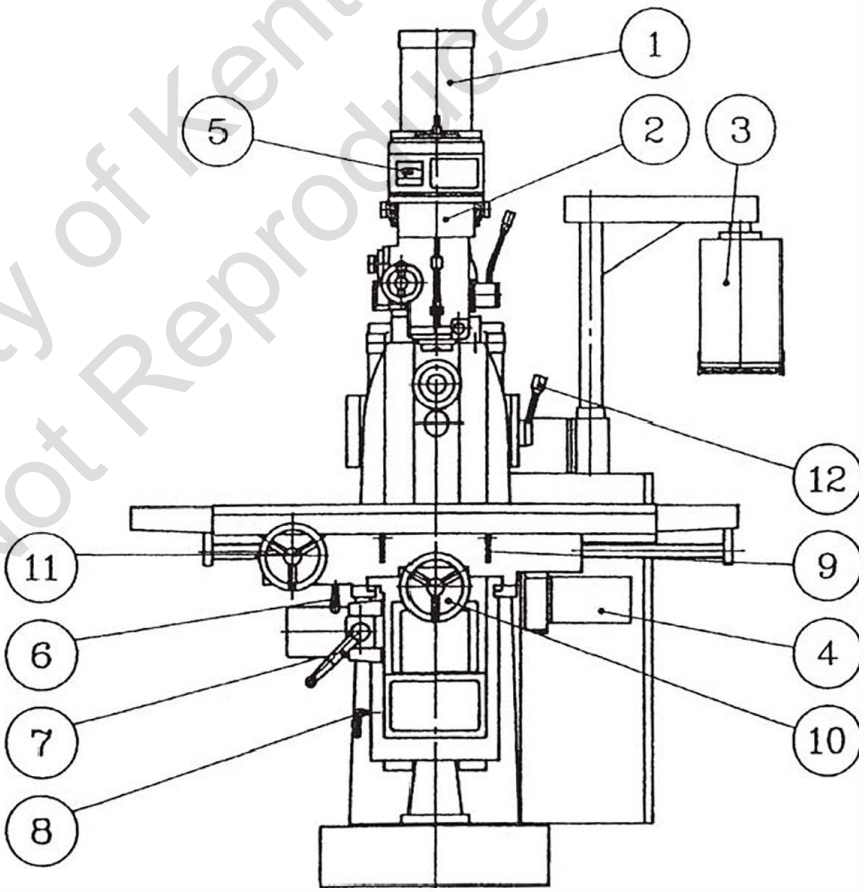

Fig-16

Property of Kent Industrial USA
Do Not Reproduce

3-11-1 Operation of manual feeding

Operate longitudinal feed by hand wheel (Fig16-11), cross feed by hand wheel (Fig16-10), and vertical feed by hand lever (Fig16-7).

Chart of rotation of manual feed handwheel and moving direction of working table.

Hand wheel Table	Rotation direction (clockwise)	Displacement one division	Scale collar one revolution
Longitudinal feed	Righthand	0.02 mm	2.50 mm
Cross feed	Forward (go far from operator)	0.02 mm	5.00 mm
Vertical feed	Upward	0.02 mm	2.00 mm

3-11-2 Operation of cross feed

Unclamp the 2 clamp lever on right side of saddle, and rotate cross hand wheel clockwise or counter clockwise for moving in-out.

3-11-3 Operation of table vertical rapid traverse

Unclamping the 2 clamping lever at left side of knee to loose the knee, start feed motor by pressing button(fig10-14) to lift-up the knee or downward knee.

3-11-4 Z Axis feed ranges selection

The Z feed speeds can be adjusted from the H-L feed switch (fig10-15)located on the control panel for rapid traverse can be variable by pressing the rapid switch(fig10-9).

3-11-5 Operation of table longitudinal power feed

Loosen the two clamping lever(fig16-9) on the table before engaging the auto longitudinal feed.

Toward the feed R & L selector(fig10-7) Right for right movement and left for left movement.

3-11-6 X-Y Axis feed ranges selection

The X and. Y feed speeds can be adjusted from the H-L feed switch (fig10-13)located on the control panel for rapid traverse can be variable by pressing the rapid switch(fig10-8)

Property of Keirt Industrial USA
Do Not Reproduce

3-11-7 SADDLE GIB ADJUSTMENT:

Saddle gib 3pcs found right side of saddle ⓢ2 and down.both Side in between of saddle and knee ⓢ3.

(1) Loosen the bolts ⓢ4 found back side of saddle slightly. then tighten the bolts ⓢ1 found in front of saddle. to where it meet to the gib.

(2) Tighten the bolts ⓢ4 properly.

3-11-8 TABBLE GIB ADJUSTMENT:

Table gib ⓣ3 found in front of slide way.

(1) Loosen the bolt ⓣ2 found right side of slide way slightly.

(2) Tight the bolt ⓣ1 found left side of slide way to where it meet to gib.

(3) Tighten the bolt ⓣ2 properly.

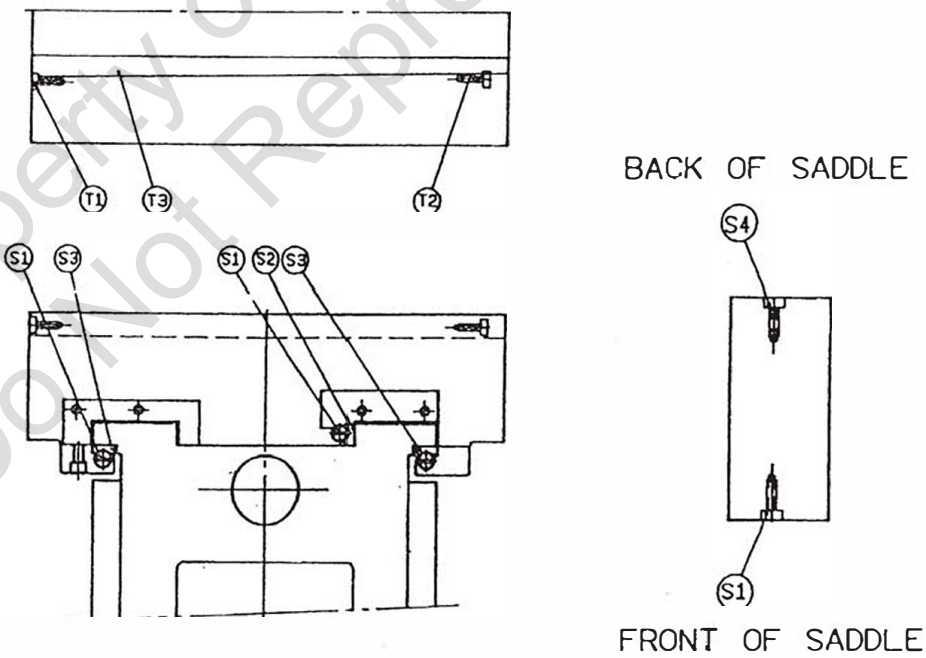

Property of Kent Industrial USA
Do Not Reproduce

3-11-9 KNEE,SADDLE,TABLE GIB ADJUSTMENT:

NOTE:when adjusting the gibs,always start with the knee gib first.
Adjust the saddle gibs second. And adjust the table gib last

KNEE GIB ADJUSTMENT:

(1)Side gib ⓚ1 found on the left side of knee.losen the lower bolt ⓚ4 slightly then tighten upper bolt ⓚ2 wher it meets to the gib.

(2)Back gib ⓚ3 found on both,back side of knee.the process of adjusting are same as side gib adjustment.

(3)Tighten the bolts ⓚ4 properle.

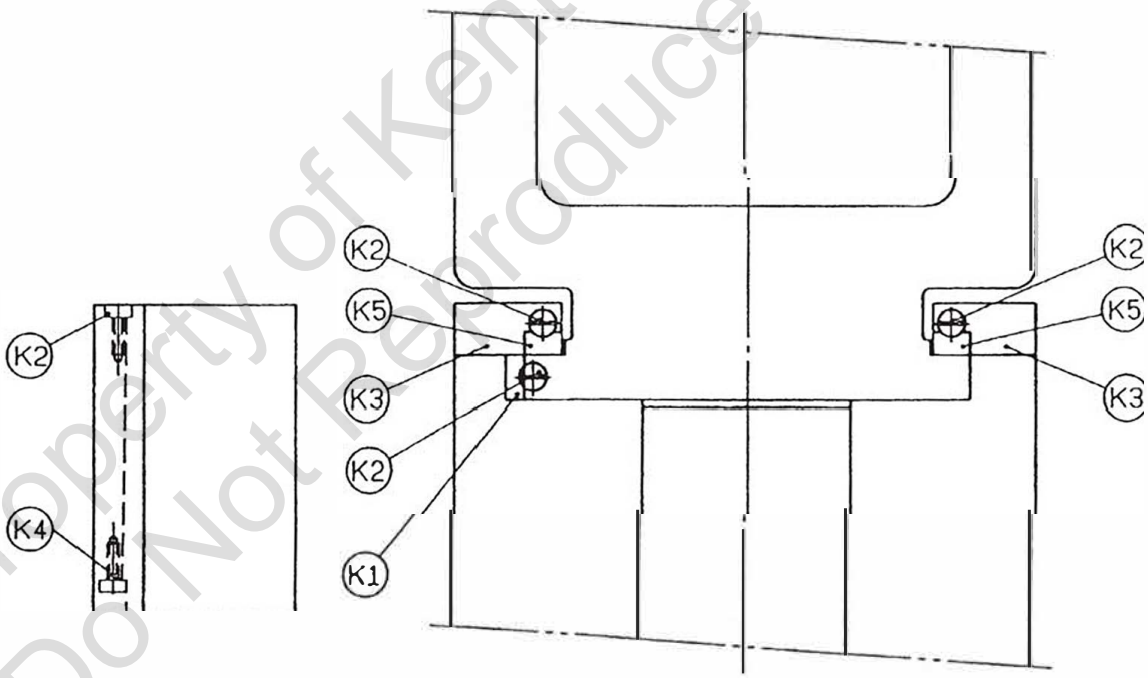

Property of Kent Industrial USA
Do Not Reproduce

3-11-10. Safety davice

(1) Thermal relay

When electric current exceeding the rating, the thermal relay (Fig 17) is actuated automatically to stop the driving motor. If the thermal relay is actuated, locate and correct the cause and reset the thermal relay by press -ing the thermal relay reset push button.

(2) Fuse

Fuses (Fig 17) are installed in the control box to protect electric circuits. If the machine does not start operation with the poser source connected and no abnormality is indicated in each safety device, check the fuses. If fuses are blown, remove the cause before replacing the fuse.

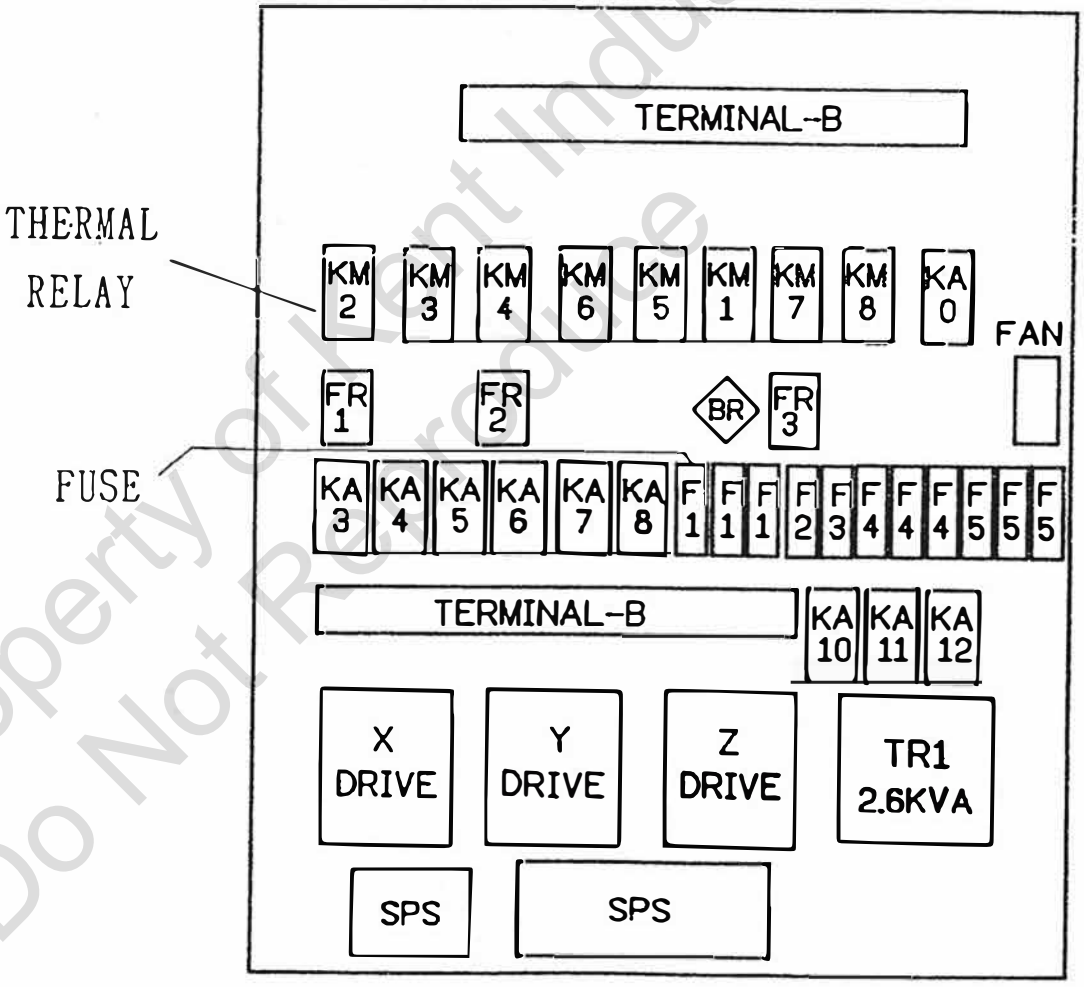

Fig-17

Property of Kent Industrial USA
Do Not Reproduce

(FOR 500S, 500VS)

4. Handing the main operation parts (FOR VH500S, VH500VS)

4-1 Name of each part (head stock)

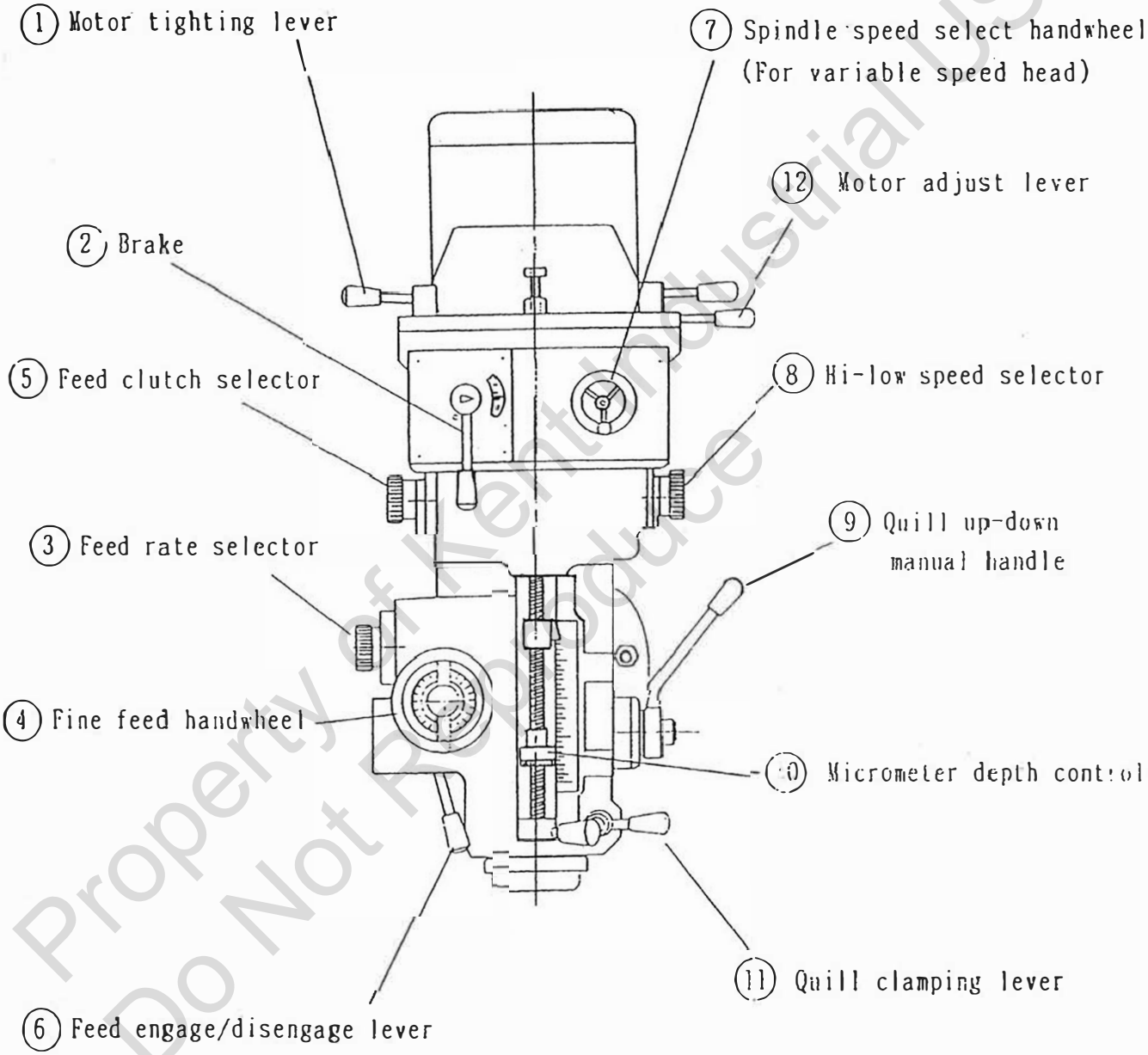

Fig-20

Variable speed

(Also good for step speed)

Property of Kent Industrial USA
Do Not Reproduce

(500S, 500VS)

4-2 Electric operation panel(VH500S, VH500VS)

1: Power on & lamp
2: Spindle forward
3: Spindle revers
4: Coolant pump
5: Horizontal start
6: X-Y selector switch
7: X-Y axis rapid
8: Z axis rapid(for servo only)
9: Emergency
10: Spindle & horizontal stop
11: X-Y axis feed motor freouency adjusting
12: Z axis up-down
13: X-Y-Z axis manual/auto selector switch (for servo only)
14: Z axis feed motor freouency adjusting (for servo only)

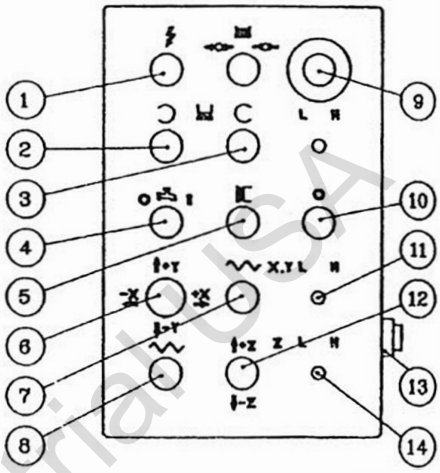

Fig-21

4-3 Change of vertical spindle speed

Check if the hi-low speed selector (Fig20-8) in the correct poition as needed. Then press the spindle high-low speed (Fig21-2) or (Fig21-3) ,spindle can be rotated in the correct direction.

The vertical spindle speed should be chosen according to work piece material, cutter diameter and cutter material table 5 and 6 for your reference.

To change the vertical spindle speed operate the high-low speed selector (Fig20-8) and rotating speed select handwheel (Fig20-7) spindle speed can be read out from the indicator.

Attention: the speed select hand wheel (Fig20-7) can be rotated only when the spindle is running.

Hi-low speed selecting: (Do not operate the hi-low speed selector (Fig20-8) when spindle is running) stop spindle first, then rotate selector to the high or low position as selected. (if can not be rotatd, please rotateing the spindle slightly by hand) Then press the vertical spindle **forward-revers** speed. (Fig21-2) (Fig21-3)

Property of Kent Industrial USA
Do Not Reproduce

4-4 SPINDLE BRAKE

Position 1 : Releasing

Position 2 : Spindle motor power off through the engagment of micro switch (inside, not shown)

Position 3 : Braking,

The lever is cam operated and will never return back until you push it. The spindle will be powered again as you push it to position 1. All are controlled electric-magnetically. This will offer you a great convenience for immediate stop of spindle and shifting back gears (Inching).

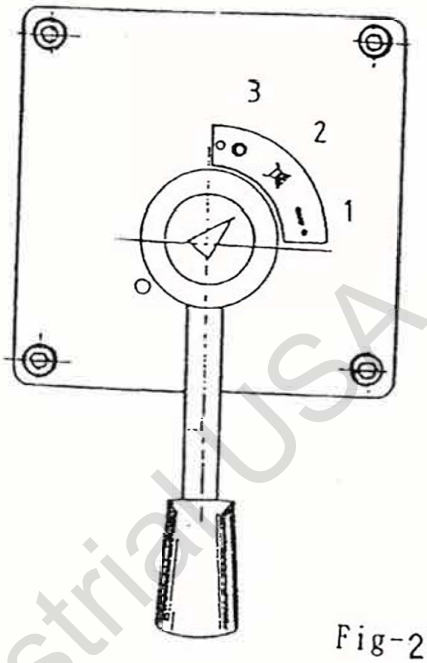

Fig-22

ADJUSTMENT

After long period usage, the brake shoe might be loosed and some adjustment is required.
Use a flat head driver to adjust the bolt inside the hole at left-front position of pulley cage.
Clockwise will tight the brake.
Counter-clockwise will loose it.

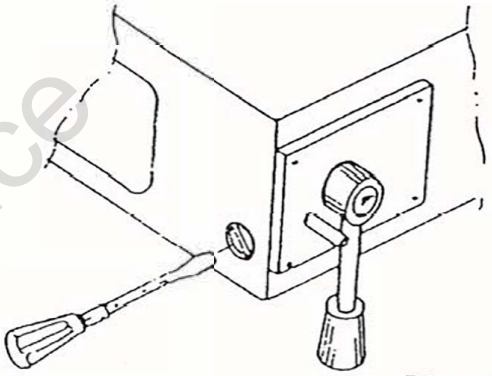

Fig-23

Operation

1. Pull the handle on the boss.
2. Select the most suitable position.
3. Push home until the locating pin engages.

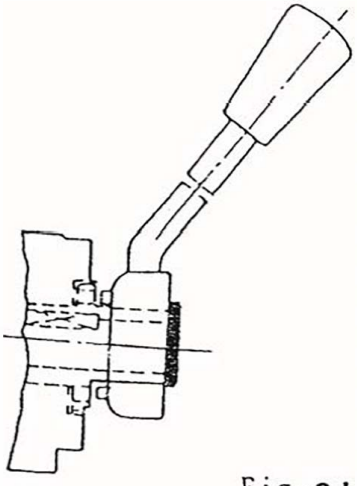

Fig-24

Property of Kent Industrial USA
Do Not Reproduce

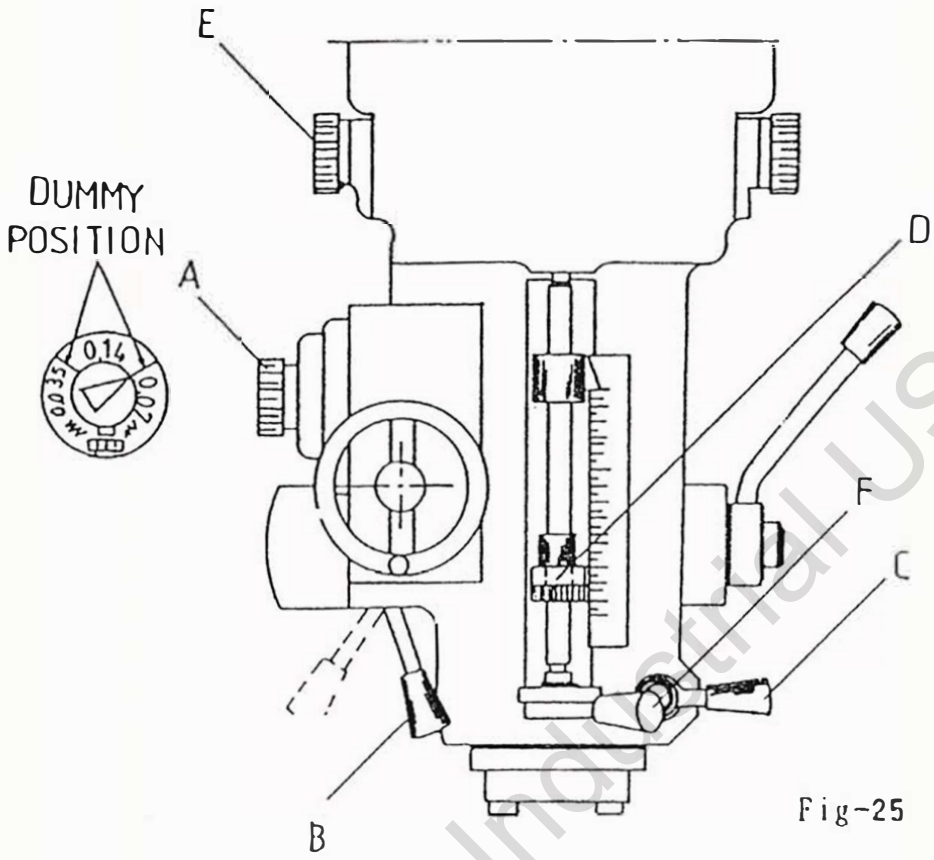

Fig-25

a).FINE HAND FEED

1. Turn the feed rate selector (A) to any of the two "Dummy" position.
2. Engage Feed Trip Lever (B).
3. The Quill is now under handwheel control.

b).POWER FEED

Maximum looding 1" (25mm) dia solid drill in steel.

1. Ensure quill lock is off,(C).
2. Set micrometer dia to required depth, (D).
3. Engage Feed Clutch Selector, (E).
4. Select feed rate, (A).
5. Engage feed trip lever, (B).
6. The feed will automatically trip out at a depth within 0.2mm (±0.01").

NOTE : To interrupt Power Feed, just press down the dis-engageme lever (F).

Property of Kent Industrial USA
Do Not Reproduce

4-5 SPINDLE SPEED RANGE

a). Belt change

1. Stop motor
2. Slachen 2 motor lock levers. (A).
3. Slide motor forward through shift lever (B).
4. Position belt on appropriate pulleys
5. Slide motor to the rear to tension V belt.
6. Tighten 2 motor lock levers.

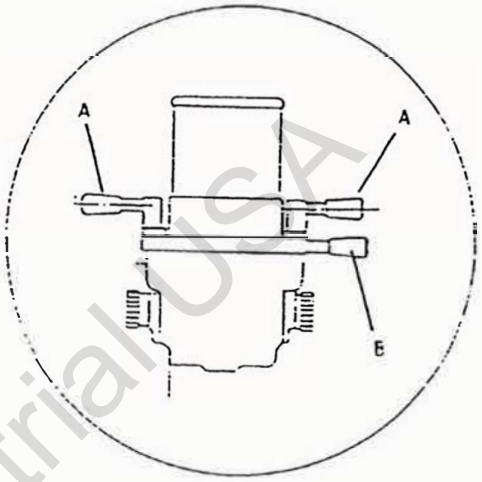

b). Pole change

1. Press the spindle stop button or brake the spindle.
2. Select the pole change switch
   "2" for high range
   "1" for low range
3. Press the start button

c). Back Gearing

1. Brake the spindle.
2. Turn the H-L knob in either direction to the next horizontal position. You can feel the "Snap in" correct position through the ball-spring mechanism. (The H-L knob is of rotory type, so you can trun it to both directions)
3. If difficulty happened in meshing gears, inching the spindle through brake lever.

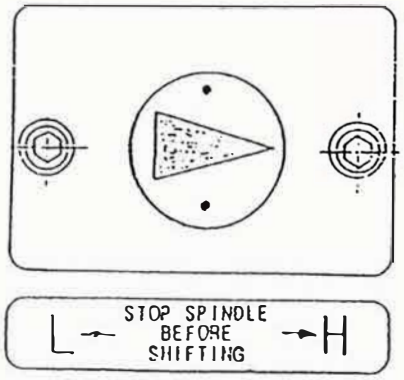

Fig-26

4-6 Vertical spindle head swivelling

Swivelling within the vertical plane of the spindle head is necessary when milling slanted work. Swivel range from 0° to 45° is possible. The spindle head should be swivelled in the following manner:

1) Loosen the 4 bolts (Fig 27-1) at the rear of the spindle head rotation shaft.
2) Turn the spindle head swivelling worm (Fig27-2) with a wrench to swivel the spindle head to the required angle while observing the scale.
3) Tighten the 4 bolts after obtaining the required swivel.

Attention: Loosen 4 bolts only. Do not take off the bolts.

Property of Kent Industrial USA
Do Not Reproduce

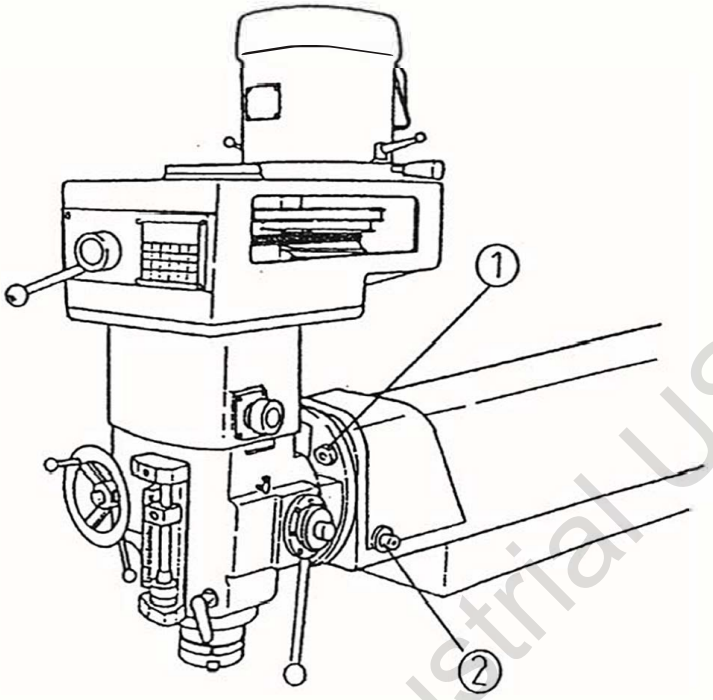

Fig-27

Property of Kent Industrial USA
Do Not Reproduce

5. Symbols

The various movements and corresponding symbols used on this machine are indicated in

Table 4.

NO.	DESCRIPTION	SYMBOL
1	Main spindle	
2	Revolution per minute	min
3	Feed amount per revolution	in.
4	Neutral	
5	Main spindle brake	
6	Main spindle without brake	
7	Table	
8	Feed (normal)	
9	Low speed feed	1/x
10	Longitudinal feed	
11	Vertical feed	

NO.	DESCRIPTION	SYMBOL
12	Rapid feed	
13	Power pilot lamp	
14	Start	
15	Stop	
16	Emergency stop	
17	Table feed motor	
18	Cutting oil pump	
19	Vertical spindle clockwise rotation	
20	Vertical spindle counter clockwise rotation	
21	Vertical spindle automatic feed	

Property of Kent Industrial USA
Do Not Reproduce

6-1 Carbide cutters

Suggested starting speed and feeds

Table 5

CARBIDE CUTTERS							
MATERIAL		FACE MILLS	SLAB MILLS	END MILLS	FULL & HALF SIDE MILLS	SAWS	FORM MILLS
MALLEABLE SOFT/HARD	FEED PER TOOTH FEET PER MIN.	.005-.015 200-300	.005-.015 200-300	.005-.010 200-350	.005-.010 200-300	.003-.004 200-350	.005-.010 175-275
CAST STEEL SOFT/HARD	FEED PER TOOTH FEET PER MIN.	.008-.015 150-350	.005-.015 150-350	.003-.010 150-350	.005-.010 150-350	.002-.004 150-300	.005-.010 150-300
100-150 BR. STEEL	FEED PER TOOTH FEET PER MIN.	.010-.015 450-800	.008-.015 450-600	.005-.010 450-600	.008-.012 450-800	.003-.006 350-600	.004-.010 350-600
150-250 BR. STEEL	FEED PER TOOTH FEET PER MIN.	.010-.015 300-450	.008-.015 300-450	.005-.010 300-450	.007-.012 300-450	.003-.006 300-450	.004-.010 300-450
250-350 BR. STEEL	FEED PER TOOTH FEET PER MIN.	.008-.015 180-300	.007-.012 150-300	.005-.010 150-300	.005-.012 160-300	.002-.005 150-300	.003-.008 150-300
350-450 BR. STEEL	FEED PER TOOTH FEET PER MIN.	.008-.015 125-180	.007-.012 100-150	.004-.008 100-150	.005-.012 125-180	.001-.004 100-150	.003-.008 100-150
CI HARD 225-350BR.	FEED PER TOOTH FEET PER MIN.	.005-.010 125-200	.005-.010 100-175	.003-.008 125-200	.003-.010 125-200	.002-.003 125-200	.005-.010 100-175
CI MED. 180-225BR.	FEED PER TOOTH FEET PER MIN.	.008-.015 200-275	.008-.015 175-250	.005-.010 200-275	.005-.012 200-275	.003-.004 200-250	.006-.012 175-250
CI SOFT 150-180 BR.	FEED PER TOOTH FEET PER MIN.	.015-.025 275-400	.010-.020 250-350	.005-.012 275-400	.008-.015 275-400	.003-.004 250-350	.008-.015 250-350
BRONZE SOFT/HARD	FEED PER TOOTH FEET PER MIN.	.010-.020 300-1000	.010-.020 300-800	.005-.010 300-1000	.008-.012 300-1000	.003-.004 300-1000	.008-.015 200-800
BRASS SOFT/HARD	FEED PER TOOTH FEET PER MIN.	.010-.020 500-1500	.010-.020 500-1500	.005-.010 500-1500	.008-.012 500-1500	.003-.004 500-1500	.008-.015 500-1500
ALUM. AL. SOFT/HARD	FEED PER TOOTH FEET PER MIN.	.010-.040 2000 UP	.010-.030 2000 UP	.003-.015 2000 UP	.008-.025 2000 UP	.003-.006 2000 UP	.008-.015 2000 UP

Generally lower end of range used for inserted blade cutters, higher end of range for indexable insert cutters.

Property of Kent Industrial USA
Do Not Reproduce

6·2 High speed steels cutters

Suggested starting speed and feeds

Table 6

HIGH SPEED STEEL CUTTERS							
MATERIAL		FACE MILLS	SLAB MILLS	END MILLS	FULL & HALF SIDE MILLS	SAWS	FORM MILLS
MALLEABLE SOFT/HARD	FEED PER TOOTH FEET PER MIN.	.005-.015 60-100	.005-.015 60-90	.003-.010 60-100	.006-.012 60-100	.003-.006 60-100	.005-.010 60-80
CAST STEEL SOFT/HARD	FEED PER TOOTH FEET PER MIN.	.010-.015 40-60	.010-.015 40-60	.005-.010 40-60	.005-.010 40-60	.002-.005 40-60	.008-.012 40-60
100-150 BR. STEEL	FEED PER TOOTH FEET PER MIN.	.015-.030 80-130	.008-.015 80-130	.003-.010 80-140	.010-.020 80-130	.003-.006 70-100	.008-.010 70-100
150-250 BR. STEEL	FEED PER TOOTH FEET PER MIN.	.010-.020 50-70	.008-.015 50-70	.003-.010 60-80	.010-.015 50-70	.003-.006 50-70	.006-.010 50-70
250-350 BR. STEEL	FEED PER TOOTH FEET PER MIN.	.005-.010 35-60	.005-.010 35-50	.003-.010 40-60	.005-.010 35-50	.002-.005 35-50	.005-.010 35-50
350-450 BR. STEEL	FEED PER TOOTH FEET PER MIN.	.003-.008 20-35	.005-.008 20-35	.003-.010 20-40	.003-.008 20-35	.001-.004 20-35	.003-.008 20-35
CI HARD 225-350 BR.	FEED PER TOOTH FEET PER MIN.	.005-.012 40-60	.005-.010 35-50	.003-.008 40-60	.005-.010 40-60	.002-.004 35-60	.005-.010 35-50
CI MED. 180-225 BR.	FEED PER TOOTH FEET PER MIN.	.010-.020 60-80	.008-.015 50-70	.003-.010 60-90	.008-.015 60-80	.003-.005 60-70	.008-.012 50-60
CI SOFT 150-180 BR.	FEED PER TOOTH FEET PER MIN.	.015-.030 80-120	.010-.025 70-110	.004-.010 80-120	.010-.020 80-120	.002-.005 70-110	.010-.015 60-80
BRONZE SOFT/HARD	FEED PER TOOTH FEET PER MIN.	.010-.025 50-225	.008-.020 50-200	.003-.010 50-250	.008-.015 50-225	.003-.005 50-250	.008-.015 50-200
BRASS SOFT/HARD	FEED PER TOOTH FEET PER MIN.	.010-.025 150-300	.008-.020 100-300	.005-.015 150-350	.008-.015 150-350	.003-.005 150-300	.008-.015 100-300
ALUM. AL. SOFT/HARD	FEED PER TOOTH FEET PER MIN.	.010-.040 300-1200	.015-.040 300-1200	.005-.020 300-1200	.010-.030 300-1200	.004-.008 300-1000	.010-.020 300-1200

Property of Kent Industrial USA
Do Not Reproduce

7.PREVENTIVE MAINTENANCE

For securing the accuracy and life of the machine, we offer the following preventive maintenance charts.

Frequency	Item
Daily	1.It is necessary to oil each lubrication point before operation. 2.Check the level of the oil lubricator and fill if necessary. 3.It is necessary to release the clamps,clean and lubricate the table after operation.
Monthly	1.Check all the gibs and adjust if necessary. 2.Check all the backlash between screws and unts,and adjust if necessary.
Quarterly	1.Check and adjust the machine accuracy.

May we suggest that.
Before attempting any maintenance in the interests of safety you isolate the machine ectrically and in the interests of efficiency you read the relevant section of this manual.

When ordering replacement parts please quote:

. The machine serial no.
  Situated above the door on the left hand side of the column.

. The head serial no.
  Found on the front of the belt housing.

. Item number.
. Part number.
. Description.
. Quantity.

Property of Kent Industrial USA
Do Not Reproduce

V BELT REPLACEMENT (VH500EVS)

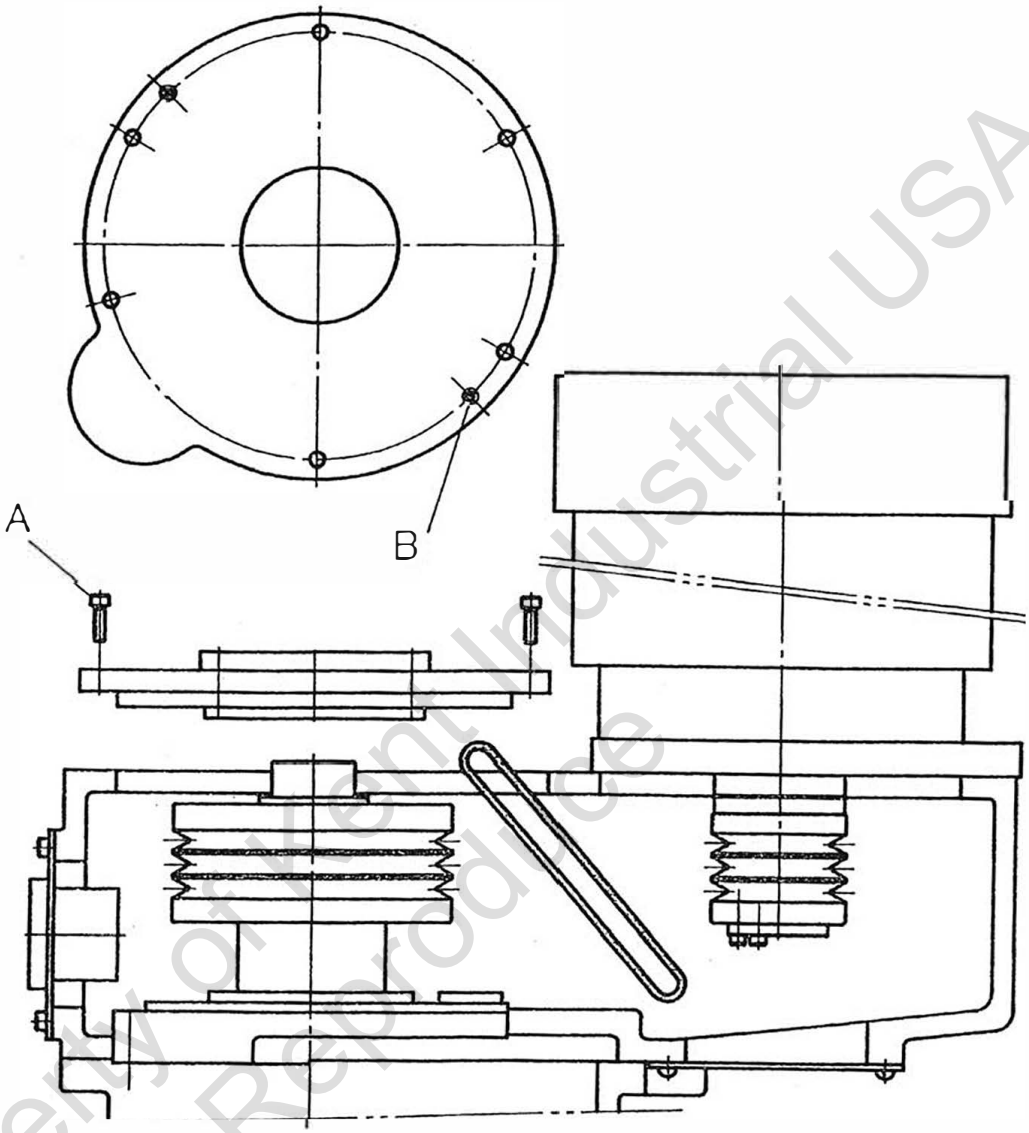

FIG-28-1

1. Isolate machine
2. Remove draw bar
3. Use L key to remove six M6 screw "A"
4. Use 2 screw "A" to screw into the two tapped holes "B" thus,the top cover assembly can be raised out
5. The belt can be replaced now.

Specification of V belt: 816-8YU-40

Property of Kent Industrial USA
Do Not Reproduce

VEE BELT REPLACEMENT (FOR VH500S, VH500VS)
(FOR 500S, 500VS)

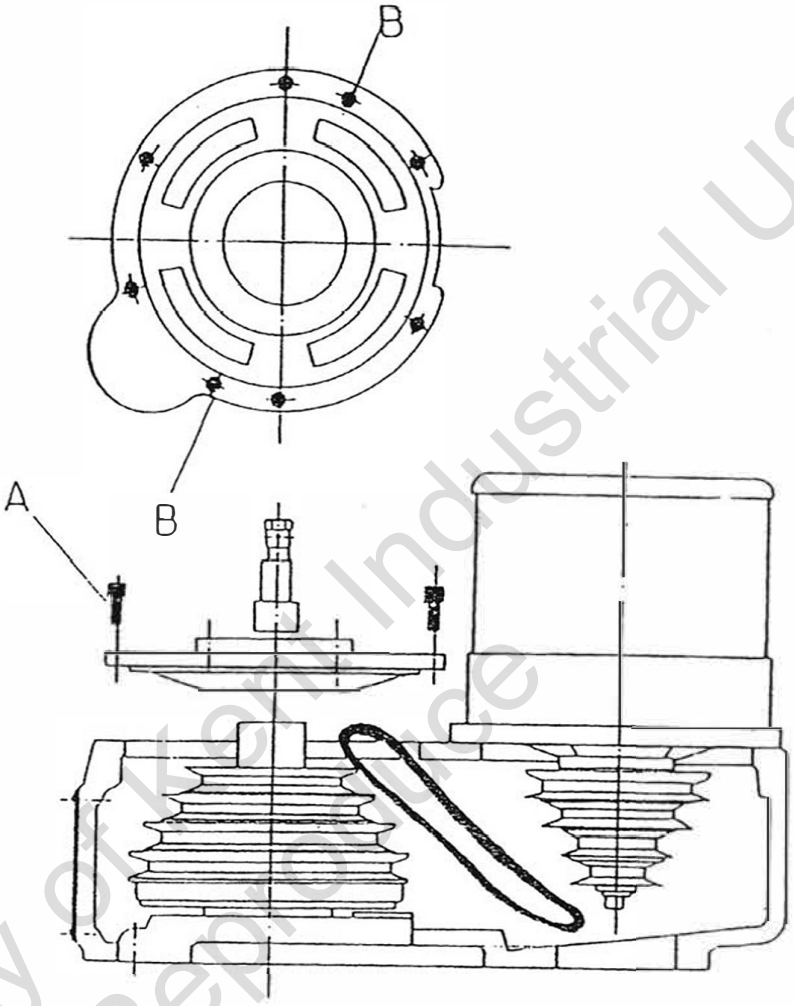

Fig-28

1. Isolate machine
2. Remove draw bar.
3. Use L key to remove six M6 screws "A".
4. Use 2 screw "A" to screw into the two tapped holes "B". Thus, the Top cover assembly can be raised out.
5. The belt can be replaced now.

Specifications of V belt : B37 for VH500S
925VC3830 FOR VH500VS

Property of Kent Industrial USA
Do Not Reproduce

Maintenance
(FOR 500S, 500VS)
HRAKE SHOE REPLACEMENT (FOR VH500S, VH500VS)

Repeat sequence 1 to 5 on page 34

1. Remove the spindle pulley off.
2. Use flat head screw driver to kick-off the two the two half piece of brake shoe.
3. Remove the two springs.
4. Replace new brake shoe ane re-assemble the two springs.
5. Press the assembled brake shoe to rear support pin first, then to the front cam.
6. For new brake shoe, some adjustments is requied. (P.27)

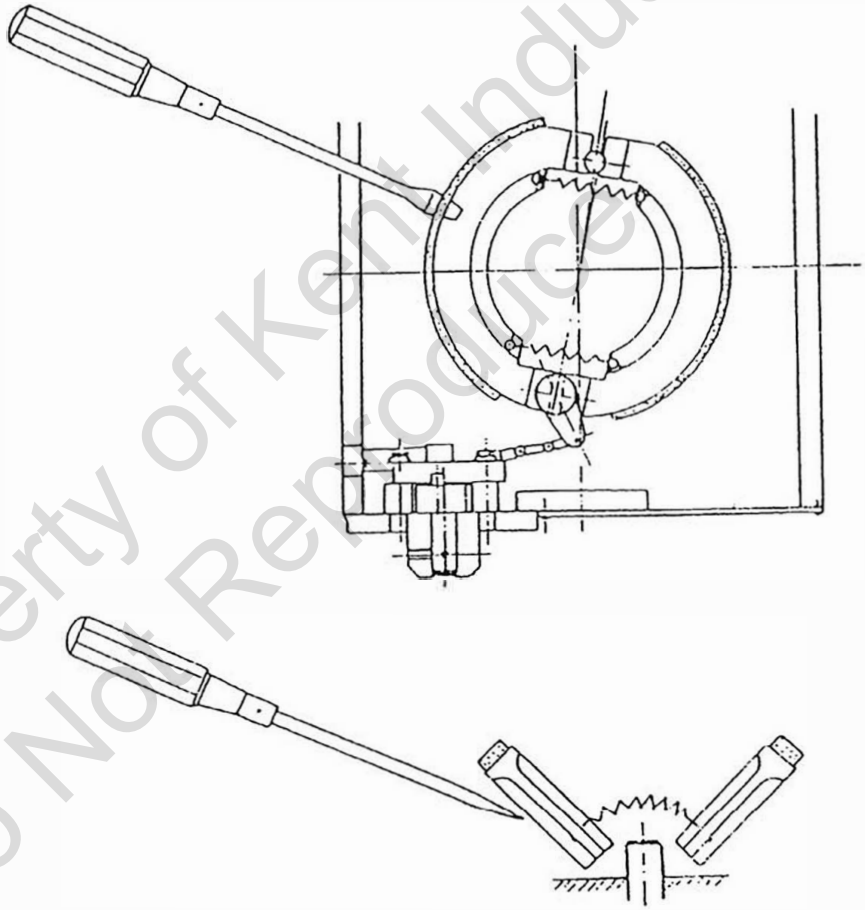

Fig-29

Property of Kent Industrial USA
Do Not Reproduce

Maintenance

BACKGEARS PEPLACEMENT

1. Remove the spindle pulley off.
2. Release six M8 bolts "A".
3. Remove pulley cage and brake shoes.
4. Release four M8 bolts "B".
5. Remove upper cover "C".
6. Remover upper snap ring "D".
7. Replace back gear "E".

NOTE :
The back gear "E" is made.
of high quality alloy steel sncmzl
through hardened, and ground, freatment.
It is preciselly assembled and
machined in the factory, therefore
it should be replaced as a whole
unit only.

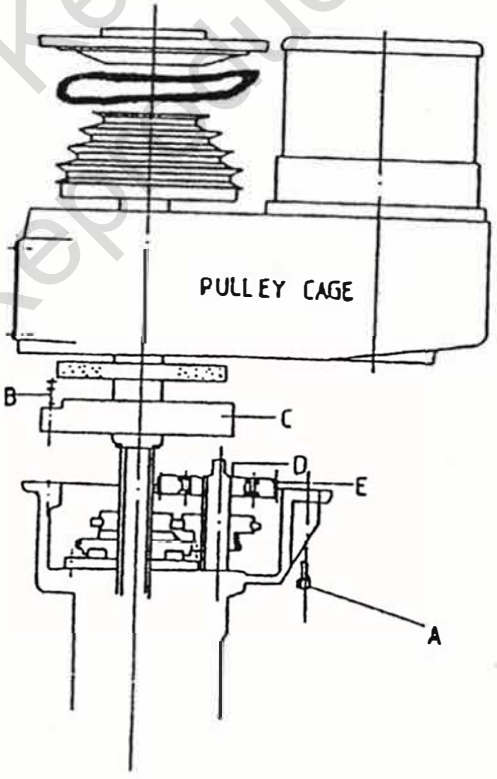

Fig- 30

Property of Kent Industrial USA
Do Not Reproduce

BALANCE SPRING REPLACEMENT

1. With quill at top of movement, apply quill lock.
2. From right hand side:
   Remove : screw "A", Spring Pin "B", hub "C",
   From left hand side:
   Remove : Feed latch cover "E", two pins "F", latch "G",
   Spring-clutch unit "H", two keys "I", snap ring "J",
   Pinion shaft seat "K".
3. Release two screws "D", allowing spring housing "L" to rotate lowly in the hole of head casting.

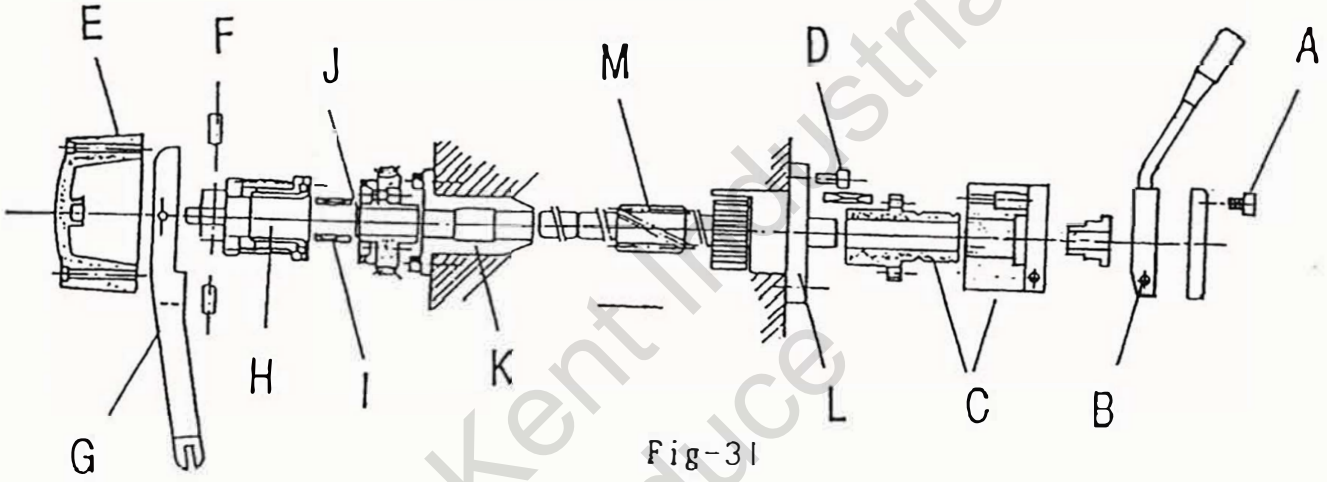

Fig-31

4. Remove pinion shaft unit "M".
5. Separte spring housing "L" from "M"
   take care of the spring tension during separting.
6. Release the set screw "N" and replace the new spring.
7. Assemble spring in opposite procedure.
   Before puting spring housing assembly to head casting hole, turn housing clockwisely to reduce the spring volume until it can be inserted to the hole.

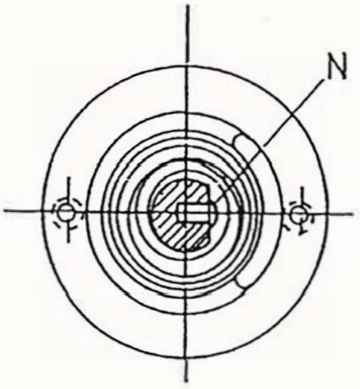

Fig-32

Property of Kent Industrial USA
Do Not Reproduce

Maintenance

SPINDLE - QUILL ASSEMBLY

The three spindle bearings, two 7011A "A" and on 6209 "B", are of machine tool grade precision bearings and was assembled very precisely in factory.
The two 7011A angular contact ball bearing "A". are selecting assembled with the inner and outer precision collar "C" and "D" and then preloaded to give the optimum combination between temperature raising and toughness of spindle.
Each spindle-quill assembly has been Optimum adjusted and test run, therefore we do not recommend you to disassemble this unit. i. e.
SPINDLE-QULII UNIT SHOULD BE CHANGED AS A WHOLE UNIT

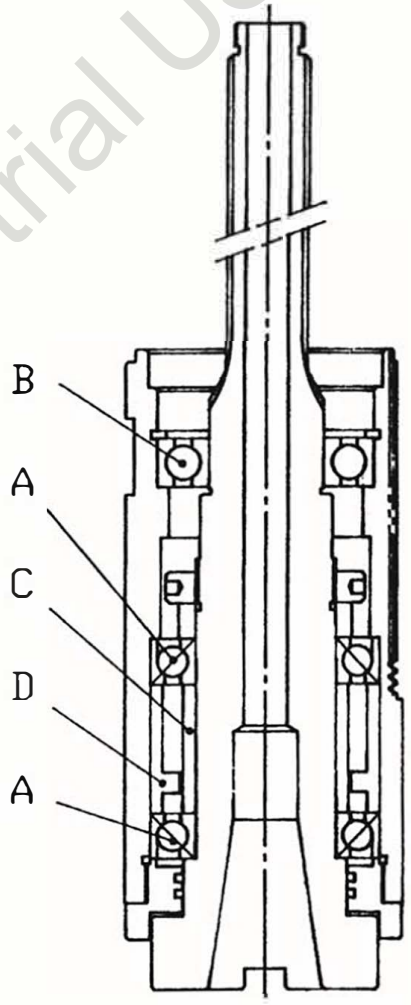

Fig-33

QUILL REMOVAL

1. Lock quill
2. Remove micrometer stop and quill stop.
3. Remove pinion shaft as described on page 39.
4. Put hand below the quill bottom and unlock quill to remove it from head casting carefully.

NOTE : When the quill unit will be replaced, please use hole micrometer to measure the hole size of cast iron as precise as possible and tell us, so we can built the correct size of quill unit for you.

Property of Kent Industrial USA
Do Not Reproduce

Trouble Shooting

TROUBLE	CAUSE	CORRECTION
SPINDLE BRAKE DO NOT WORK OR NOT WORK WELL	1. Micro-switch fail. 2. Magnatic contactor fail. 3. Brake shoe wear	1. Replace micro-switch. 2. Replace magnetic contactor. 3-1 Tight the adjusting screw. 3-2 Replace brake shoe.
SPINDLE POSER FEED DO NOT WORK AFTER THE ENGAGE LEVER PULLED	1. Quill locked 2. Power feed clutch not rotated to feed engage position. 3. Power feed rates select knob set on "Dummy" position (The micro-feed handwheel not rotate)	1. Always release quill clamp before feeding. 2. Rotate power feed clutch knob to feed engage position. 3. Rotate power feed feed rates select knob to one of the three feed rates.
SPINDLE POWER FEED STOPS DURING DRILLING	1. Overload makes safety clutch slip. (Clitch slip noise happen)	1. Reduce cutting condition. or if necessary, adjust the spring force of clutch.
SPNDLE POWER FEED DIS-ENGAGEMENT NOT WORK WILL	1. The two M4 set screws on dis-engage lever loosed.	1. Tighten set screws.
HAND MICRO-FEED NOT WORK	1. Power feed rates selecting knob set on one of the three feed positions. 2. Engage lever not operated.	1. Rotate this knob to one of the two "Dummy" positions. 2. Pull engage lever.
V-BELT SLIPS AT CUTTING	1. V-belt too loose. 2. V-belt worn. 3. Wrong grooves.	

Property of Kent Industrial USA
Do Not Reproduce

Trouble Shooting

TROUBLE	CAUSE	CORRECTION
FEED STOP SUDDENLY DURING MACHINING	1. Overload makes the shear pin shear out.	1. Check the overload cause and replace shear pin.
FEED RATE CHANGE NOT WORK	2. The jaw of the two speeds rocker broken.	1. Replace the two speeds rocker.
KNEE CANT BE POWER ELEVATED	1. Knee is locked on column. 2. Over weight of workpiece, fixtures...etc. (Max load capacity : 350 kgs) 3. Poor lubrication between Knee and column.	1. Release lock bolts. 2. Use hand elevating. 3. Check lubrication.
HARD TO CHANGE SPEED OF HORIZONTAL	1. Gears not meshed. 2. Poor lubrication on spline shaft and gears.	1. Use "Inching" button. 2. Check lubrication.
RAPID TRAVERSE OF FEEDBOX NOT WORK	1. Wrong motor rotating di- 2. Multi-disc clutch worn. 3. Rapid traverse shifter worn.	1. Reconnect the power supply. 2. Adjust clutch. 3. Replace shifter

Property of Kent Industrial USA
Do Not Reproduce

Trouble Shooting

TROUBLE	CAUSE	CORRECTION
CHATTER	1. Lack of rigidity in the machine, fixtures arbor or workniece.	1. Improve rigidity
	2. Cutting load too great.	2. Decrease number of teeth in contact with workpiece.
	3. Dull cutter	3. Resharpen
	4. Poor lubrication	4. Improve lubrication
	5. Straight tooth cutter.	5. Use helical tooth cutter.
	6. Peripheral relief angle too great.	6. Decrease relief angle
CANNOT HOLD SIZE	1. Cutting load too great	1. Decrease number of teeth in contact with workpiece
	2. May be due to chip packing	2. Increase oil pressure in redirect flow so as to wash chips out of teeth
	3. Chips causing misalignment.	3. Brush or blow all chips away before mounting new piece of work
PREMATURE CUTTER DULLING	1. Cutting load too great	1. Decrease number of teeth in contact with workpiece
		2. Add blending oil to lubricant
POOR SURFACE FINISH	1. Feed too high	1. Decrease feed and increase speed
	2. Dull tool	2. Resharpen
	3. Speed too low	3. Increase surface spee
	4. Insufficient number of cutter teeth	4. Use cutter with more closely spaced teeth

Property of Kent Industrial USA
Do Not Reproduce

Trouble Shooting

TROUBLE	CAUSE	CORRECTION
CUTTER "HOGS IN"	1. Peripheral relief too great 2. Rake angle too large 3. Improper speed	1. Use recommended angle 2. Decrease rake angle 3. Check and adjust
VIBRATION	1. Insufficient clearance causing rubbing 2. Machine at fault	1. Use recommended clearance angle 2. Check machine, be sure arbor is at least 1/3 diameter of cutter
WORK BURNISHING	1. Cut is too light 2. Insufficient peri-pheral relief 3. Land too wide	1. Increase depth of cut 2. Increase peripheral relief angle 3. Decrease width of land
CUTTER BURNS	1. Insufficient lubri-cant 2. Speed too fast	1. Add more sulfur base oil 2. Decrease speed
TEETH BREAKING	1. Feed too high	1. Decrease feed per teeth May be pos-sible to maintain rate by increasing the number of teeth

Property of Kent Industrial USA
Do Not Reproduce

PARTS LIST

Property of Kent Industrial USA
Do Not Reproduce

LONGITUDINAL FEED

(500S, 500VS, 500EVS)

(VH500S, VH500VS, VH500EVS)

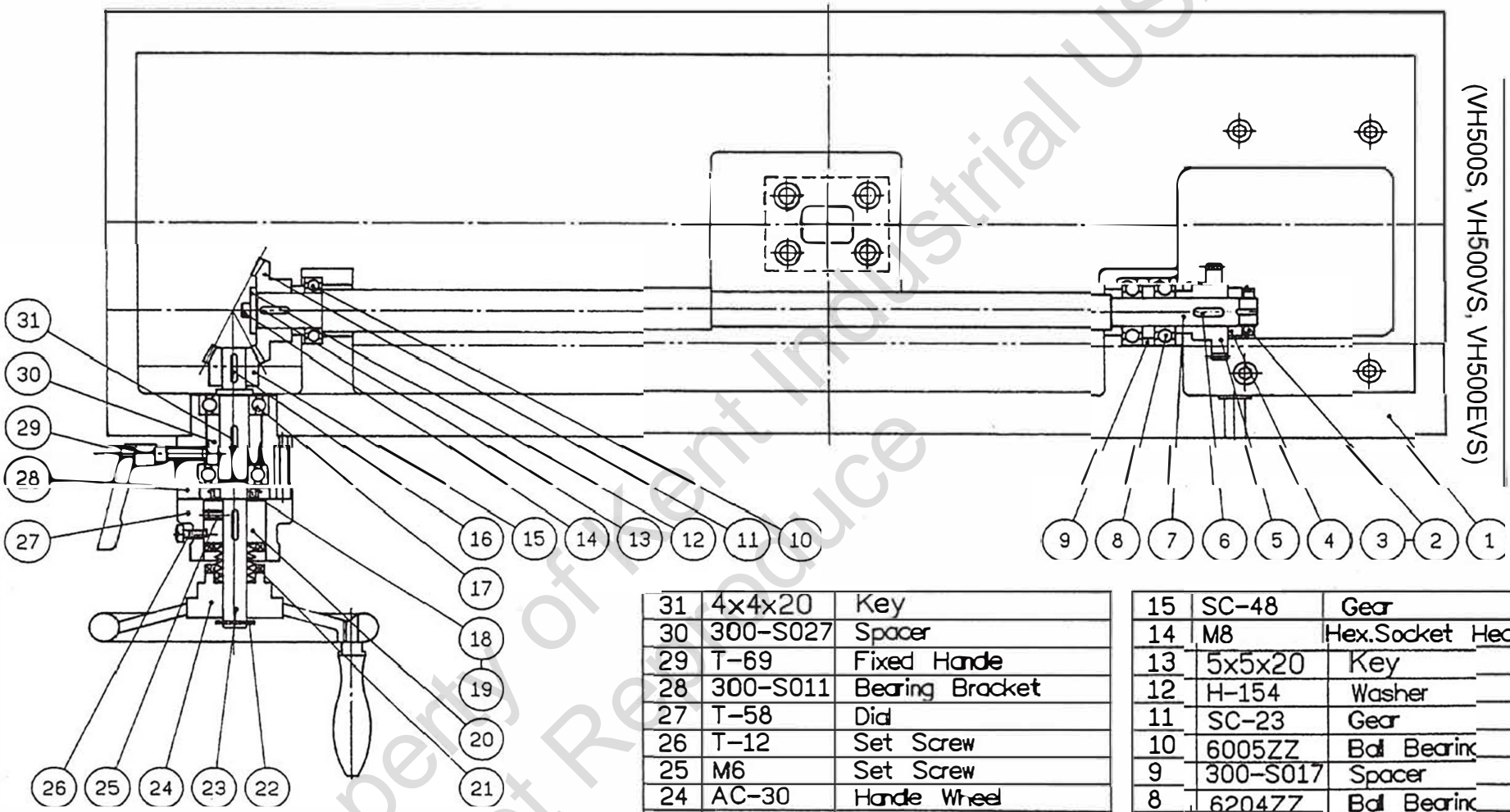

ITEM	PART No.	NAME
31	4x4x20	Key
30	300-S027	Spacer
29	T-69	Fixed Handle
28	300-S011	Bearing Bracket
27	T-58	Dial
26	T-12	Set Screw
25	M6	Set Screw
24	AC-30	Handle Wheel
23	300-S010	Shaft
22	S-16	Snap Ring
21	T-42-1	Spring
20	AC-31	Dial Holder
19	AW-04	Washer
18	AN-04	Lock Nut
17	6204ZZ	Ball Bearing
16	5x5x20	Key
15	SC-48	Gear
14	M8	Hex.Socket Head Bolt
13	5x5x20	Key
12	H-154	Washer
11	SC-23	Gear
10	6005ZZ	Ball Bearing
9	300-S017	Spacer
8	6204ZZ	Ball Bearing
7	300-S012	Shaft
6	4x4x20	Key
5	300-S015	Gear
4	300-S018	Spacer
3	AW-04	Washer
2	AN-04	Lock Nut
1	300-S054	Saddle

Property of Kent Industrial USA
Do Not Reproduce

LONGITUDINAL FEED

(500S, 500VS, 500EVS)
(VH500S, VH500VS, VH500EVS)

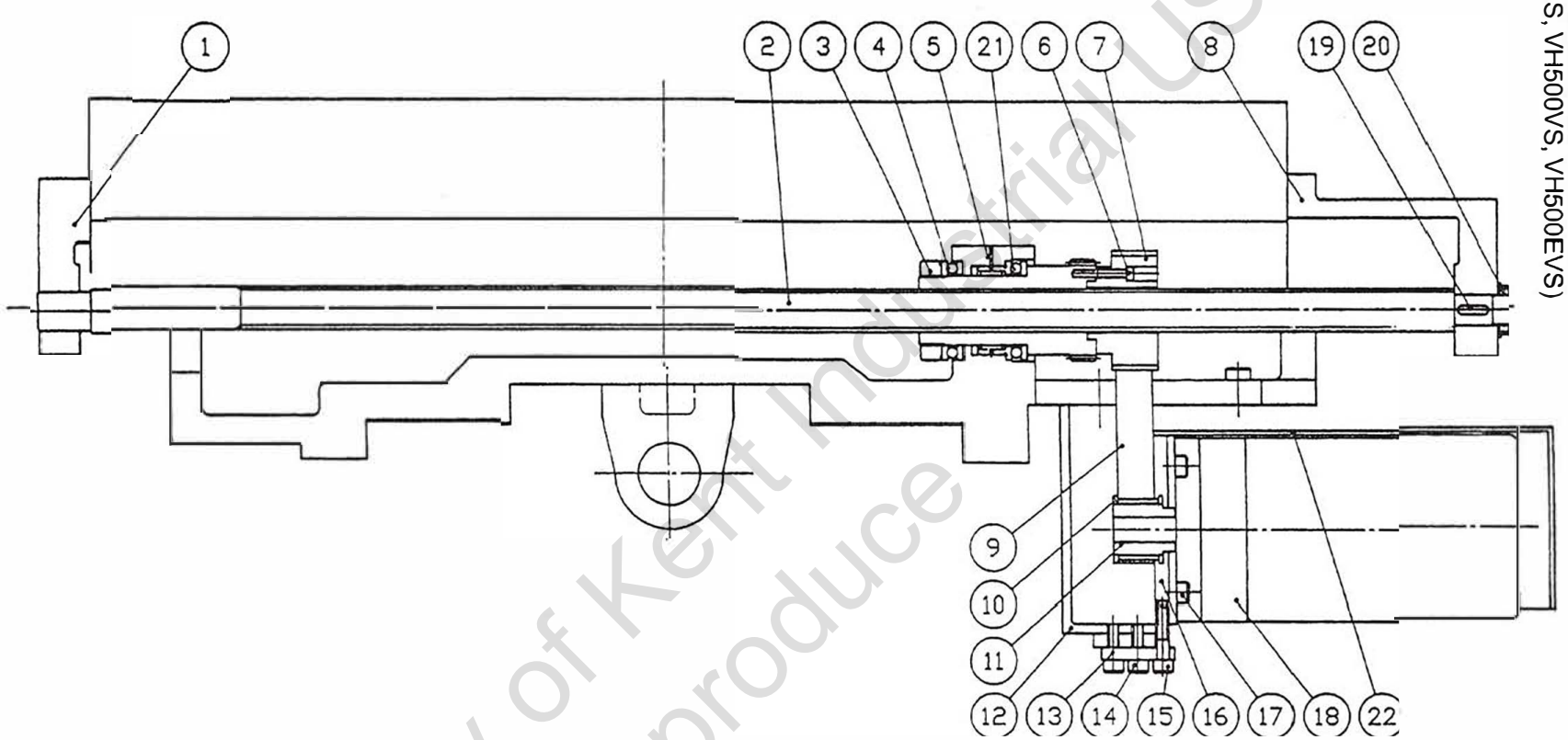

ITEM	PART No.	NAME
12	300-S030	Feed Box
11	SP-047	Time Pully
10	SP-025	Flanc
9	SM-475-25W	Time Bolt
8	300-T003	Bearing Sets
7	300-S023	Time Pully
6	M5	Hex.Socket Head Bolt
5	300-S001	Saddle
4	51109	Thrust Bearing
3	MR45	Lock Nut
2	300-T006	Ball Screw
1	300-T002	Bearing Sets

22	300-S31A	Motor Cover
21	NAX4532Z	Needdle Bearing
20	AN-04	Lock Nut
19	4x4x20	Key
18		AC Servo Motor
17	M8	Hex.Socket Head Bolt
16	300-S032	Motor Plate
15	M8	Hex.Socket Head Bolt
14	M8	Hex.Socket Head Bolt
13	SP-060	Fixed Plate

Property of Kent Industrial USA
Do Not Reproduce

CROSS FEED (500S, 500VS, 500EVS) (VH500S, VH500VS, VH500EVS)

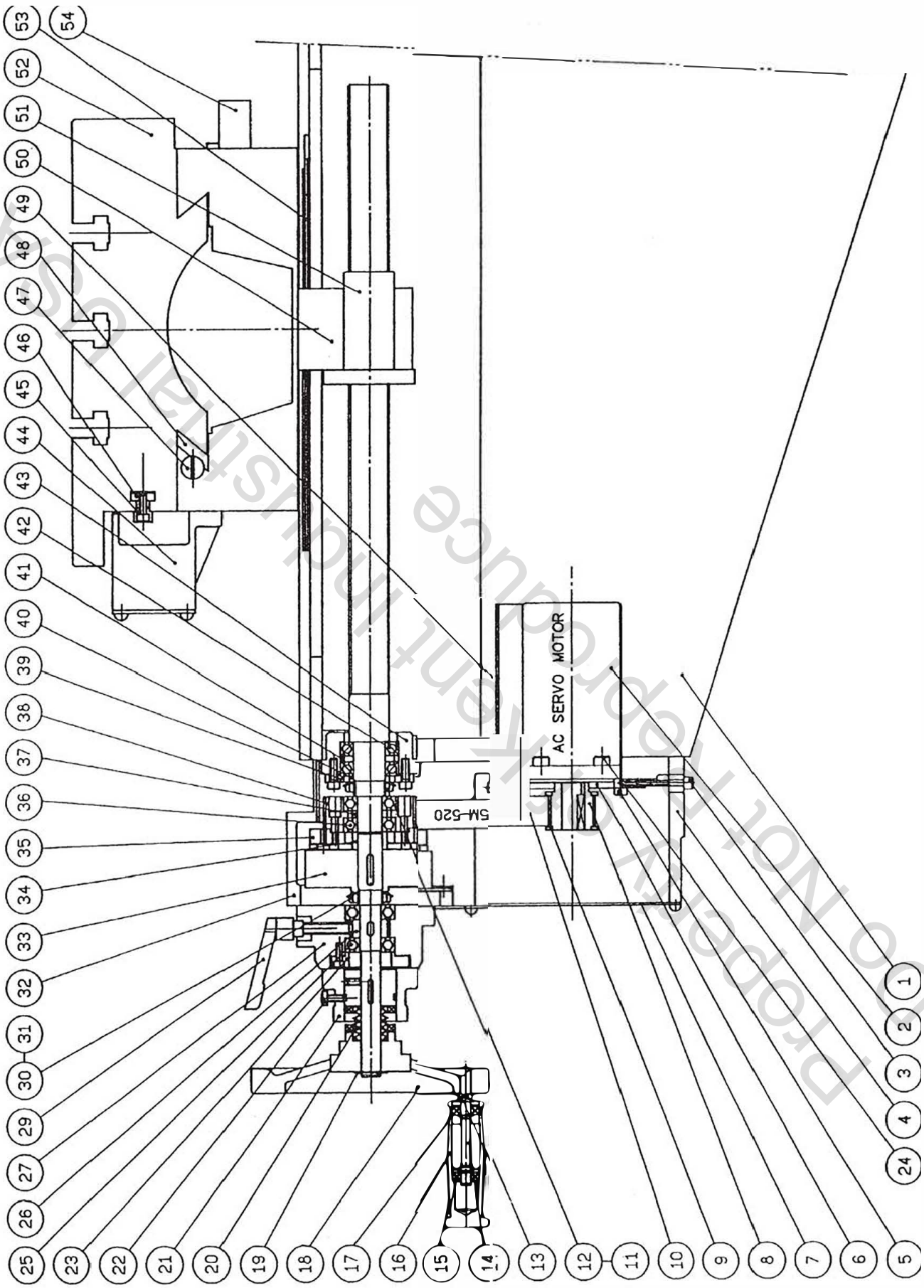

Copyright © Kent Industrial Service
Product Department

CROSS FEED (500S, 500VS, 500EVS) (VH500S, VH500VS, VH500EVS)

NO	NAME	NO	NAME
1	Knee	42	Ball Bearing
2	AC Servo Motor	43	Baring Bracket
3	Hex.Socket Head Bolt	44	Limit Case
4	Feed Box	45	Dog
5	Hex.Socket Head Bolt	46	Nut
6	Motor Bracket	47	Adjusting Screw
7	Cover	48	Gib
8	Belt Wheel	49	Cover
9	Flange	50	Bracket
10	Belt	51	Ball Screw
11	Lock Nut	52	Table
12	Lock Washer	53	Chip Guard
13	Nut	54	Table Rear Cover
14	Shaft		
15	Snap Ring		
16	Handle		
17	Ball Bearing		
18	Handlet Wheel		
19	Snap Ring		
20	Spring		
21	Dial		
22	Set Screw		
23	Baring Stop		
24	Hex.Socket Head Bolt		
25	Ball Bearing		
26	Spacer		
27	Baring Bracket		
28			
29	Handle Screw		
30	Lock Nut		
31	Lock Washer		
32	Feed Box		
33	Magnetic Clutch		
34	Spacer		
35	Spacer		
36	Ball Bearing		
37	Spacer		
38	Belt Wheel		
39	Baring Stop		
40	Spacer		
41	Spacer		

Property of Kent Industrial USA
Do Not Reproduce

SADDLE SLIDE WAY GUARD (500S, 500VS, 500EVS) (VH500S, VH500VS, VH500EVS)

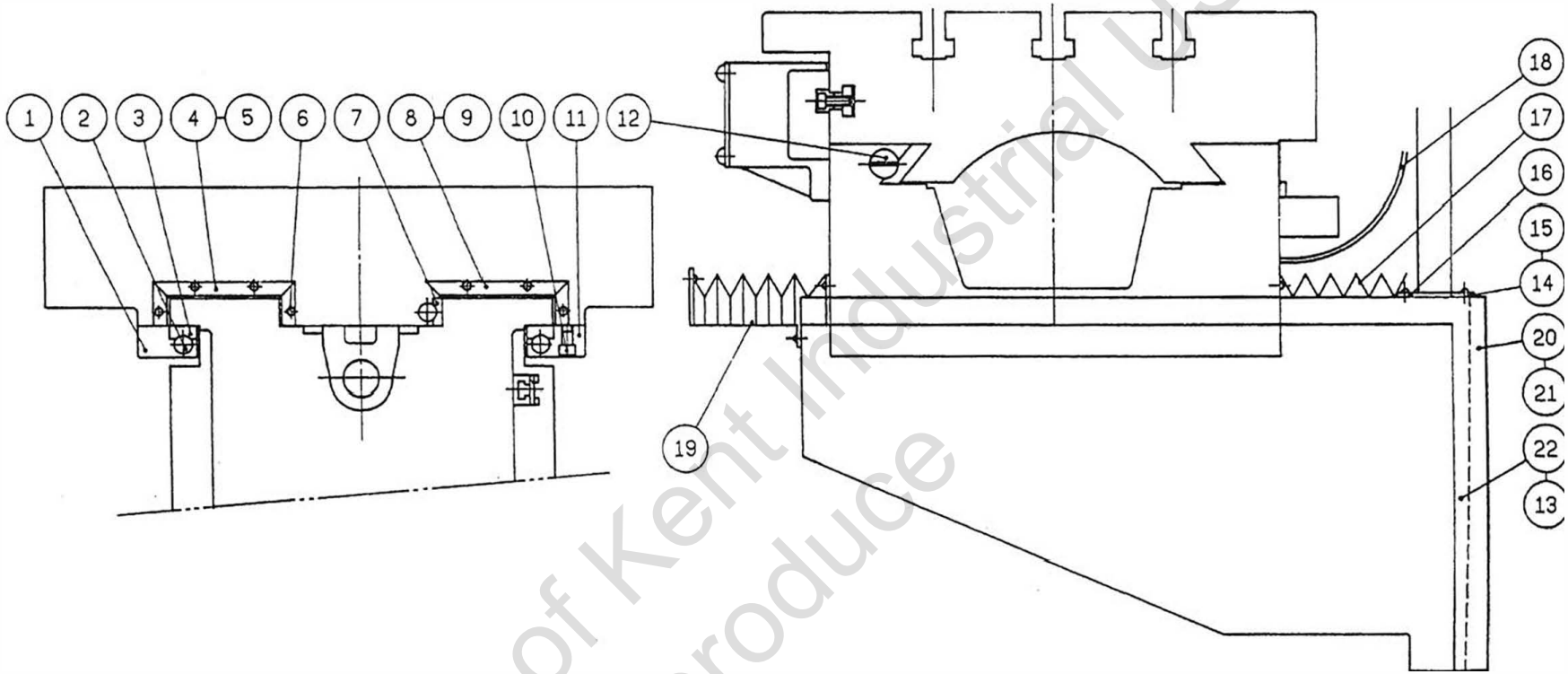

ITEM	PART NO.	NAME
22	K-159	Gib
21	K-148	Gib Holder(L)
20	K-147	Gib Holder(R)
19	300-S071	Chip Guard
18	S-84	Chip Guard
17	K-101	Chip Guard
16	K-160	Wiper
15	K-161	Wiper
14	K-162	Wiper
13	K-158	Gib
12	300-T042	Gib Holder

ITEM	PART NO.	NAME
11	300-S056	Gib Holder(R)
10	M12x35L	Hex. Socket Bolt
9	300-S062	Wiper
8	300-S061	Wiper
7	300-S057	Gib
6	M5x0.8Px12L	Pan Head Screw
5	300-S060	Wiper
4	300-S060	Wiper
3	300-S058	Gib
2	C-41	Adjusting Screw
1	300-S055	Gib Holder(L)

Property of Kent Industrial USA
Do not Reproduce

Z AXIS FEED

(SERVO MOTOR)
(500S, 500VS, 500EVS)
(VH500S, VH500VS, VH500EVS)

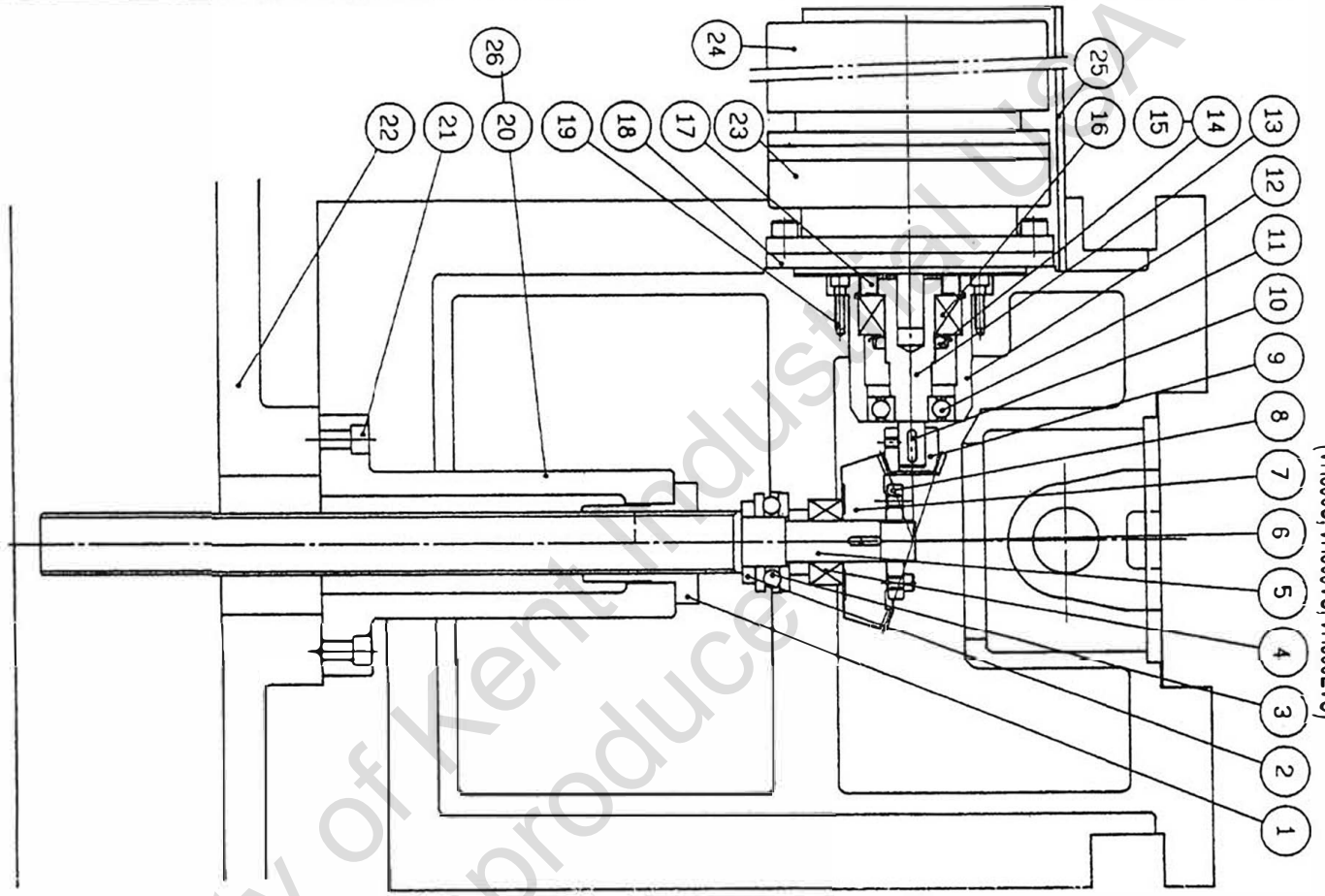

5000P131
S: 1/3

ITEM	PART NO.	NAME
26	K-149(S-500)	Lead Screw Housing
25	K-169A	Motor Cover
24	850W	Ac Sever Motor
23	SVB-12	Gear Reducer
22	300-B052	Base
21	M10x30L	Hex. Socket Bolt

ITEM	PART NO.	NAME
20	K-173	Lead Screw Housing
19	M6x15L	Hex. Socket Bolt
18	300-S096	Motor Bracket
17	K-112A	Nut
16	5206	Angular Ball Bearing
15	AW-05	Washer
14	AN-05	Nut
13	K-115	Shaft
12	K-125	Bearing Bracket
11	6304	Ball Bearing

ITEM	PART NO.	NAME
10	5x5x20	Key
9	K-166	Gear
8	K-168	Nut
7	K-167	Gear
6	7x8x20	Key
5	K-163C	Leadscrew
4	5205	Angular Ball Bearing
3	51306	Thrust Ball Bearing
2	K-146	Collar
1	K-145A	Nut

Property of Kent Industrial USA
Do Not Reproduce

Z AXIS FEED
(AC MOTOR)
(500S, 500VS, 500EVS)
(VH500S, VH500VS, VH500EVS)

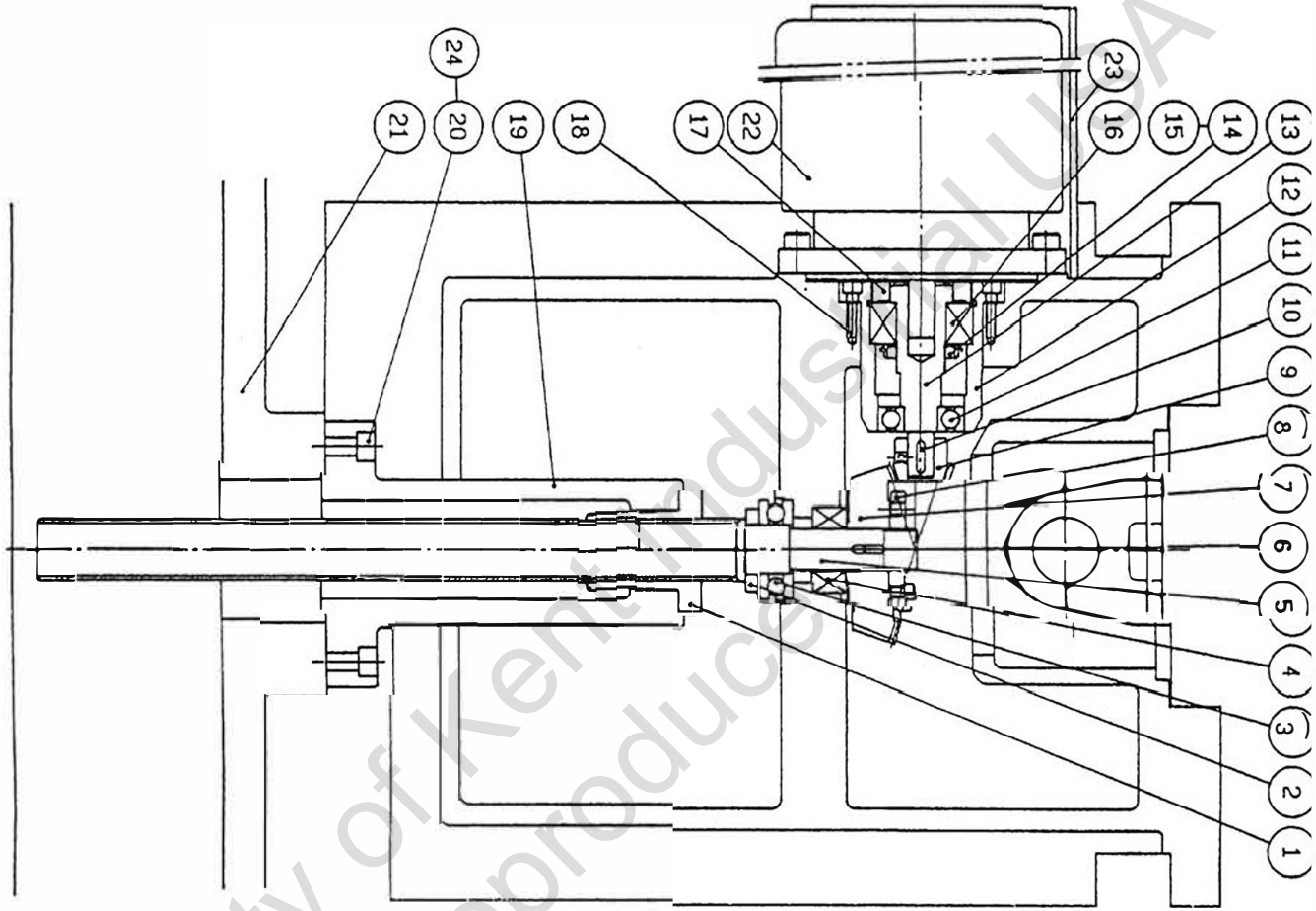

5000P327
S: 1/3

ITEM	PART NO.	NAME
24	K-149(S-500)	Hex. Socket Bolt
23	K-117	Motor Cover
22	1HP-12P	Ac Motor
21	300-B052	Base

ITEM	PART NO.	NAME
20	M10x30L	Hex. Socket Bolt
19	K-173	Lead Screw Housing
18	M6x15L	Hex. Socket Bolt
17	K-112A	Nut
16	5206	Angular Ball Bearing
15	AW-05	Washer
14	AN-05	Nut
13	K-115	Shaft
12	K-125	Bearing Bracket
11	6304	Ball Bearing

ITEM	PART NO.	NAME
10	5x5x20	Key
9	K-166	Gear
8	K-168	Nut
7	K-167	Gear
6	7x8x20	Key
5	K-163C	Leadscrew
4	5205	Angular Ball Bearing
3	51306	Thrust Ball Bearing
2	K-146	Collar
1	K-145A	Nut

Property of Kent Industrial USA
Do Not Reproduce

Z AXIS FEED

(500S, 500VS, 500EVS)
(VH500S, VH500VS, VH500EVS)

5000P132
S: 1/3

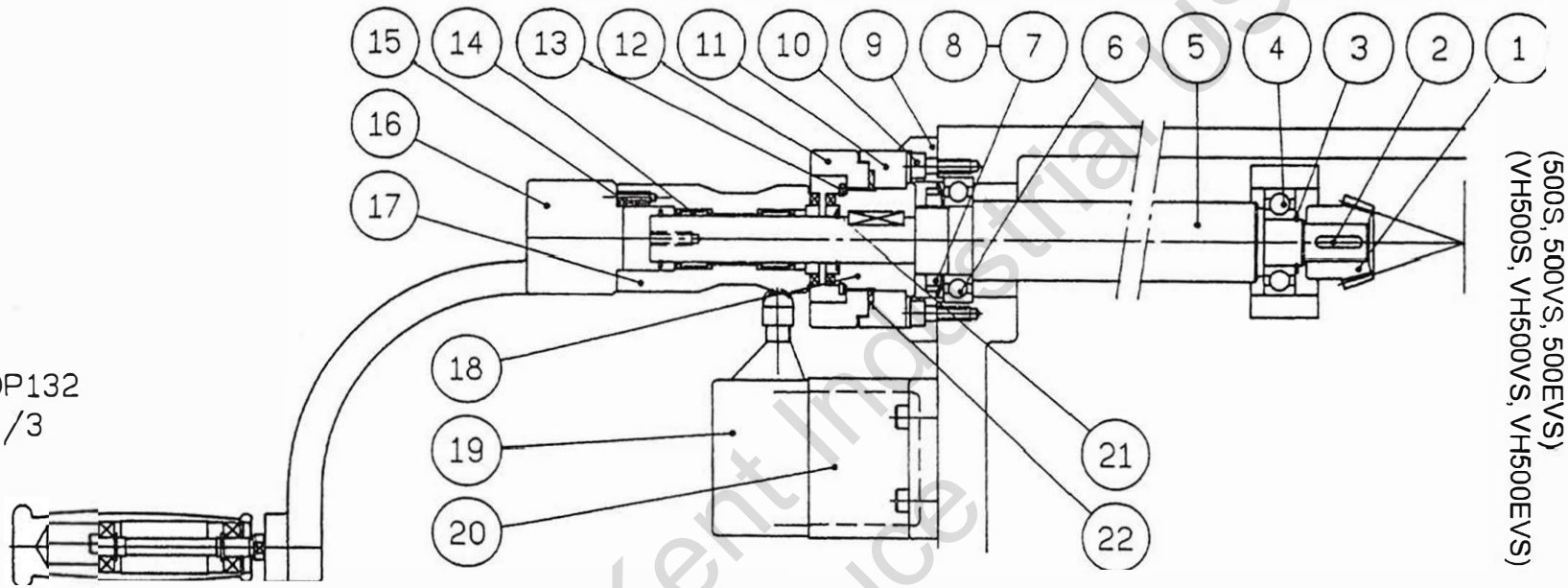

ITEM	PART NO.	NAME	ITEM	PART NO.	NAME
22	6206	Bearing Washer	11	K-154	Dial
21	S-20	Snap Ring	10	M6x20L	Hex. Socket Bolt
20	K-170	Micro Switch Bracket	9	K-153	Bearing Stop
19		Micro Switch	8	AW-06	Washer
18	K-155	Clutch	7	AN-06	Nut
17	K-157	Clutch	6	6006ZZ	Ball Bearing
16	K-165	Elevating Crank	5	K-151	Shaft
15	M6x20L	Hex. Socket Bolt	4	6204ZZ	Ball Bearing
14	TLA2016Z	Needle Roller Bearings	3	S-20	Snapring
13	S-40	Snap Ring	2	5x5x20	Key
12	K-156	Dial Lock Nut	1	K-166	Gear

Property of Kent Industrial USA
Do Not Reproduce

RAM ASSEMBLY

(VH500S, VH500VS, VH500EVS)

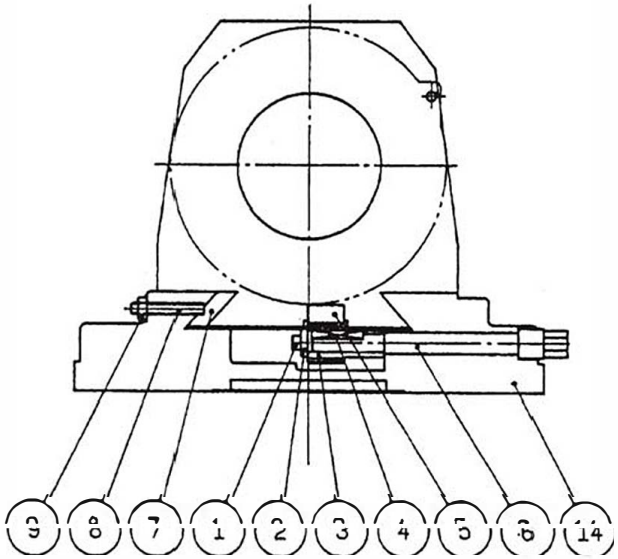

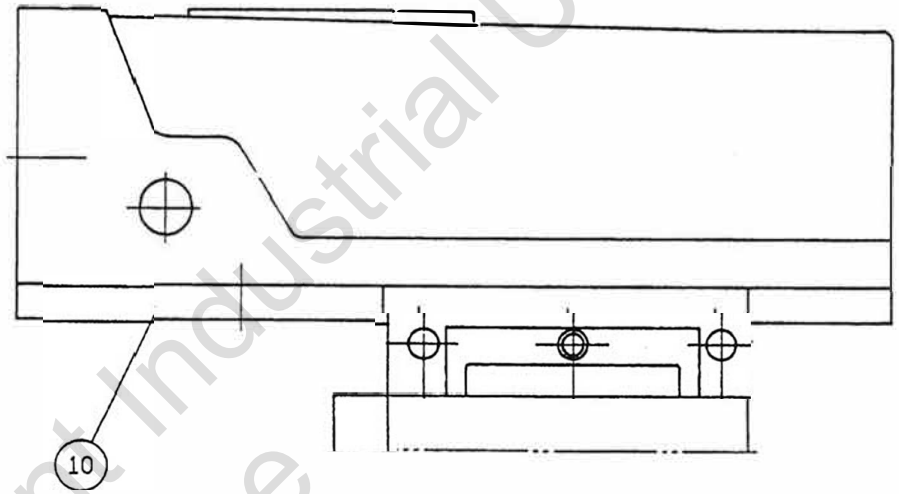

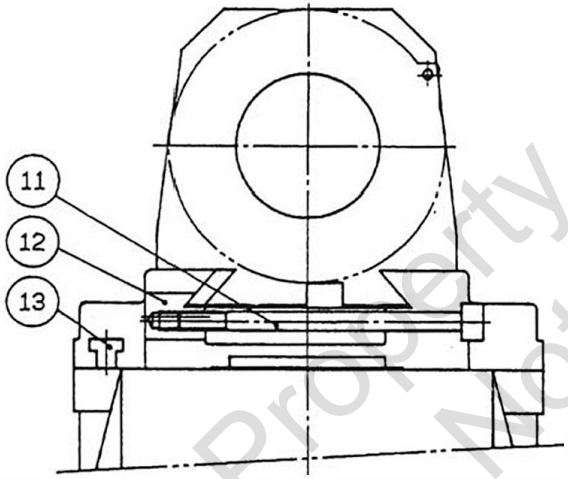

ITEM	PART NO.	NAME
14	300-C095	Swivel Base
13	R-73	Lock Screw
12	300-C096	Lock Block
11	300-C104	Ram Lock Bolt
10	R-75A	Ram
9	M10	Nut
8	M10x60L	Set Screw
7	300-C093	Gib
6	R-68	Ram Pinion
5	R-67	Rack
4	5x5x30L	Key
3	R-62	Gear
2	R-63	Washer
1	M6x20L	Hex. Socket Bolt

Property of Kent Industrial USA
Do Not Reproduce

INVERTER TOP HOUSING (500EVS) (VH500EVS)

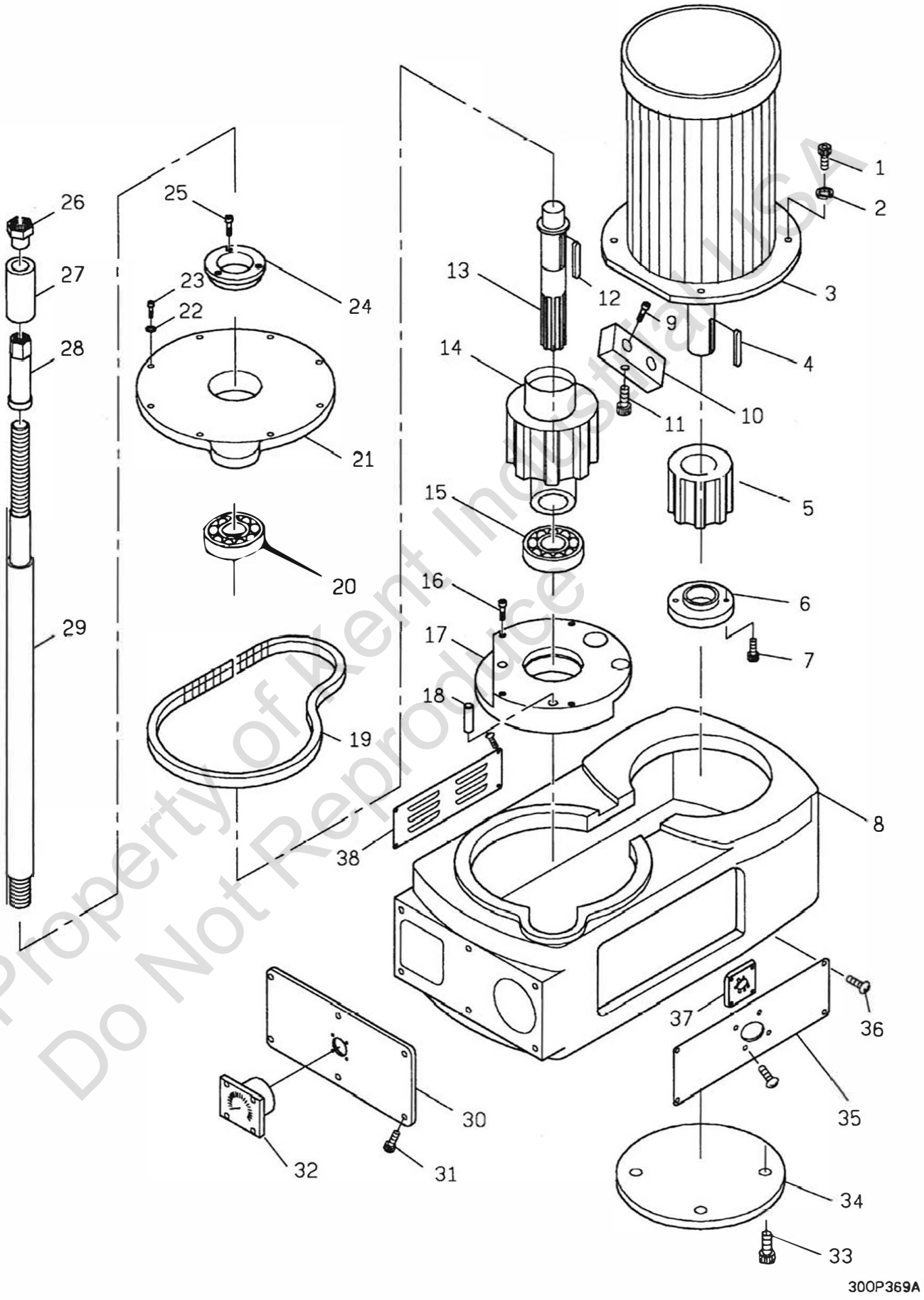

Property of Kent Industrial USA
Do Not Reproduce

INVERTER TOP HOUSING (500EVS) (VH500EVS)

NO	NAME	NO	NAME
1	Hex.Socket Head Bolt		
2	Washer		
3	Motor		
4	Key		
5	Pully		
6	Pully Stop Ring		
7	Hex.Socket Head Bolt		
8	Head Body		
9	Hex.Socket Head Bolt		
10	Bracket		
11	Hex.Socket Head Bolt		
12	Key		
13	Gear Shaft		
14	Pully		
15	Ball Bearing		
16	Hex.Socket Head Bolt		
17	Bearing Supporter		
18	Pin		
19	Belt		
20	Ball Bearing		
21	Bearing Supporter		
22	Washer		
23	Hex.Socket Head Bolt		
24	Bearing Stop Ring		
25	Hex.Socket Head Bolt		
26	Nut		
27	Outer Sleeve		
28	Inner Sleeve		
29	Draw Bar		
30	Brake Seat		
31	Hex.Socket Head Bolt		
32	Rpm Indicator		
33			
34			
35			
36			
37			
38			
39			
40			
41			

Property of Kent Industrial USA
Do Not Reproduce

TOP HOUSIN (500S) (VH500S)

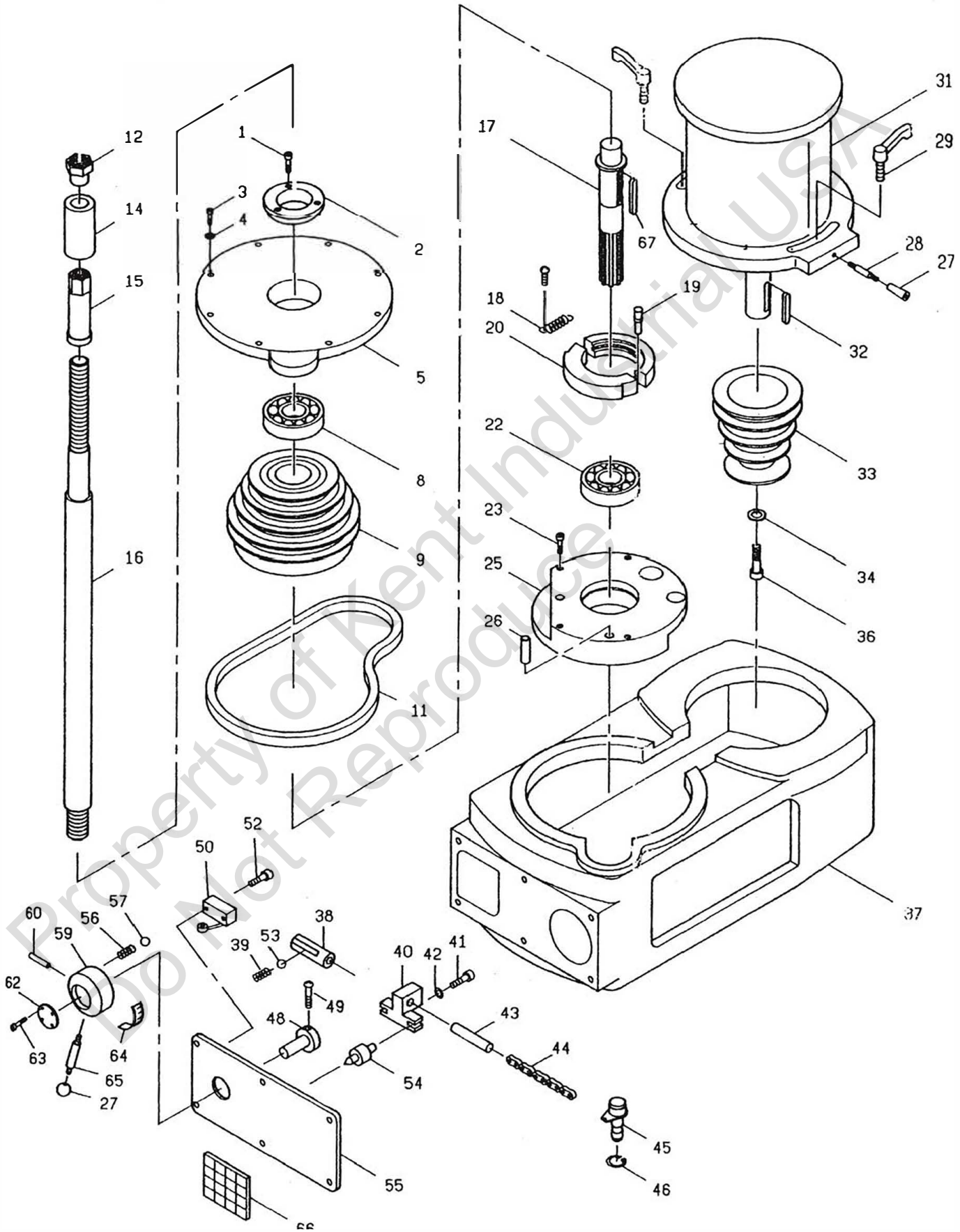

Property of Kent Industrial USA
Do Not Reproduce

TOP HOUSING (500S) (VH500S)

NO	MANE	NO	MANE
1	Socket Screw	36	Socket Screw
2	Bearing Cover	37	Pulley Case
3	Socket Screw	38	Adjusting Nut
4	Spring Washer	39	Spring
5	Top Cover	40	Brake Slide
6	Lock Nut	41	Hex Bolt
7	Self-Lock Washer	42	Washer
8	Ball Bearing	43	Chain Adjusting Screw
9	Spindle Pulley	44	Roller Chain
10	Steel Brake Ring	45	Brake Cam
11	V Belt, B37	46	"E" Snap Ring
12	Nut	47	Taper Pin
13	Knock Pin	48	Eccentric Shaft
14	Outer Sleeve	49	Knock Pin
15	Inner Sleeve	50	Micro-Switch
16	Draw Bar	51	Washer
17	Pinion Shaft	52	Hex Bolt
18	Brake Spring	53	Steel Ball
19	Brake Shoe Pin	54	Shaft
20	Brake Shoe	55	Brake Seat
21		56	Spring
22	Ball Bearing	57	Steel Ball
23	Socket Screw	58	Knock Pin
24		59	Brake Lever Nut
25	Bearing Housing	60	Konck Pin
26	Pin	61	Konck Pin
27	Plastic Handle	62	Direction Indicating Plate
28	Lever	63	Rivet
29	Lever Nut	64	Brake Position Plate
30		65	Lever
31	Vertical Spindle Motor	66	Spindle Speeds Chard
32	Key	67	Key
33	Motor Pulley		
34	Washer		
35	Spring Washer		

Property of Kent Industrial USA
Do Not Reproduce

TOP HOUSING (500VS) (VH500VS)

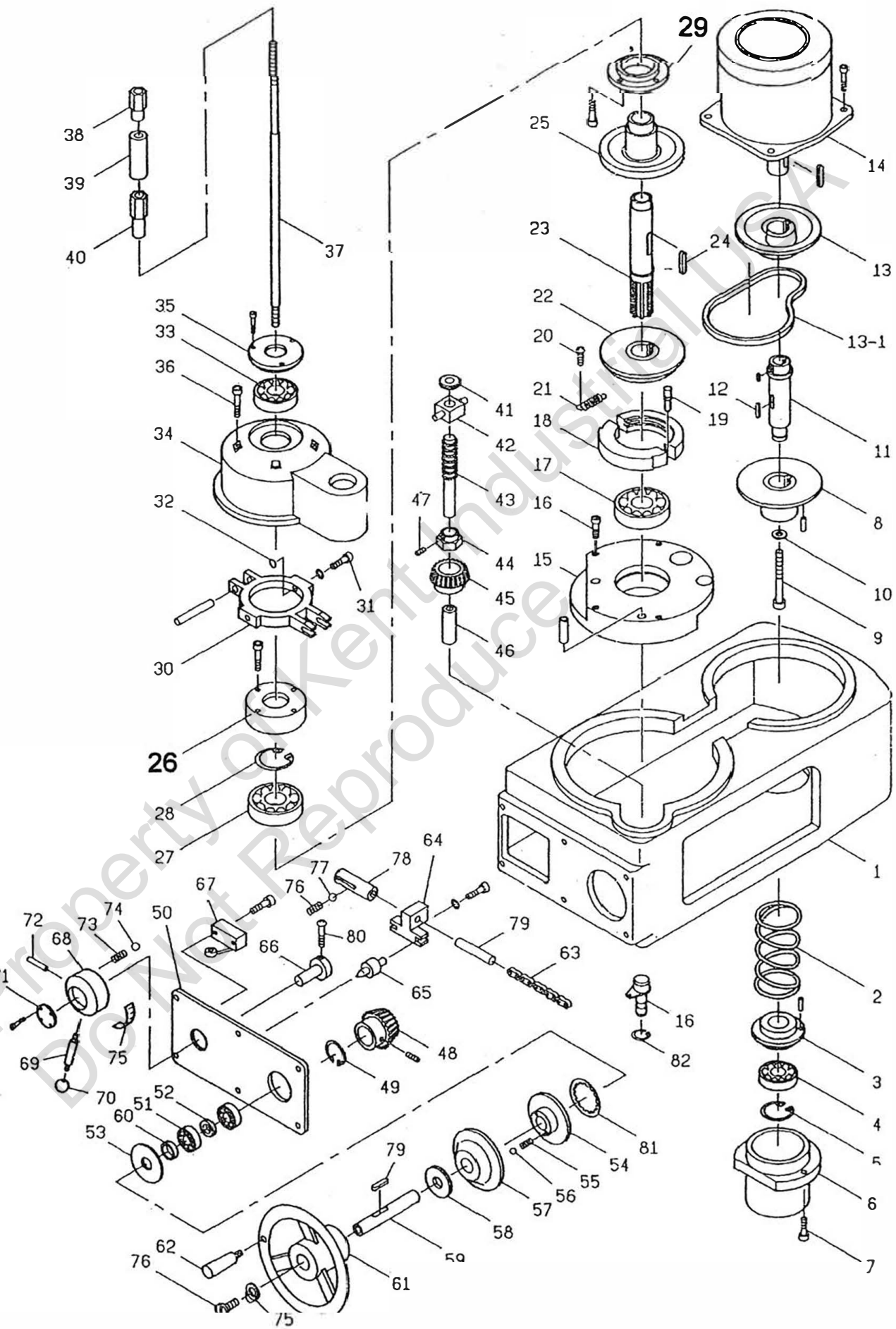

Property of Kent Industrial USA
Do Not Reproduce

TOP HOUSING (500VS) (VH500VS)

NO	NAME	NO	NAME
1	Head Body	42	Screw Seat
2	Spring	43	Screw
3	Fixed Flange	44	Nut
4	Ball Bearing	45	Bevel Gear
5	C -Ring	46	Bushing
6	Bearing Seat	47	Set Screw
7	Hex.Socket Head Bolt	48	Bevel Gear
8	Motor Pully	49	C -Ring
9	Hex.Socket Head Bolt	50	Fixed Plate
10	Washer	51	Ball Bearing
11	Trans Shaft	52	Spacer
12	Key Belt	53	Gear
13	Motor Pully	54	Discentral Ring
14	Motor	55	Spring
15	Bearing Seat Stop Ring	56	Steel Ball
16	Hex.Socket Head Bolt	57	Speed Meter
17	Ball Bearing	58	Spacer
18	Brake Plate	59	Shaft
19	Fixed Pin	60	Spacer
20	Round Head Bolt	61	Handle Wheel
21	Spring	62	Handle
22	Pully	63	Chain
23	Gear Shaft	64	Moving Block
24	Key	65	Shaft
25	Pully	66	Fixed Ring
26	**Bearing Seat**	67	Mico Switch
27	Ball Bearing	68	Handel Seat
28	C -Ring	69	Handle
29	**Bearing Stop**	70	Plastic Ball
30	Changing Speed Crank	71	Cap
31	Hex.Socket Head Bolt	72	Pin
32	Ring	73	Spring
33	Ball Bearing	74	Steel Ball
34	Changing Speed Seat	75	Name Plate
35	Bearing Stop	76	Spring
36	Hex.Socket Head Bolt	77	Steel Ball
37	Drawbar	78	Sleeve Nut
38	Nut	79	Adjustment Stud
39	Sleeve	80	Pin
40	Nut	81	Gear
41	Thrust Bearing	82	C -Ring

Property of Kent Industrial USA
Do not Reproduce

HEAD (500S, 500VS, 500EVS) (VH500S, VH500VS, VH500EVS)

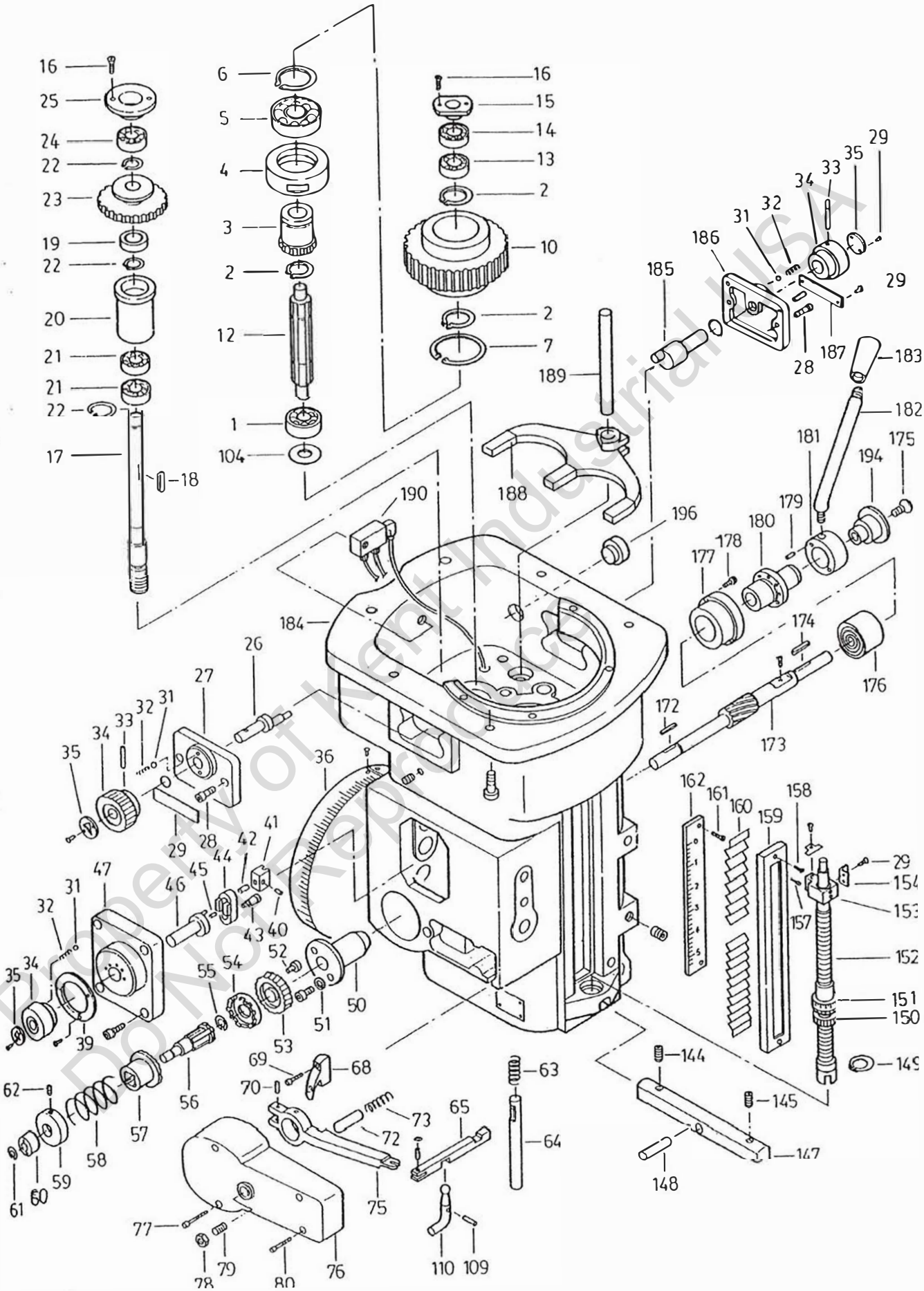

Property of Kent Industrial USA
Do Not Reproduce

HEAD (500S, 500VS, 500EVS) (VH500S, VH500VS, VH500EVS)

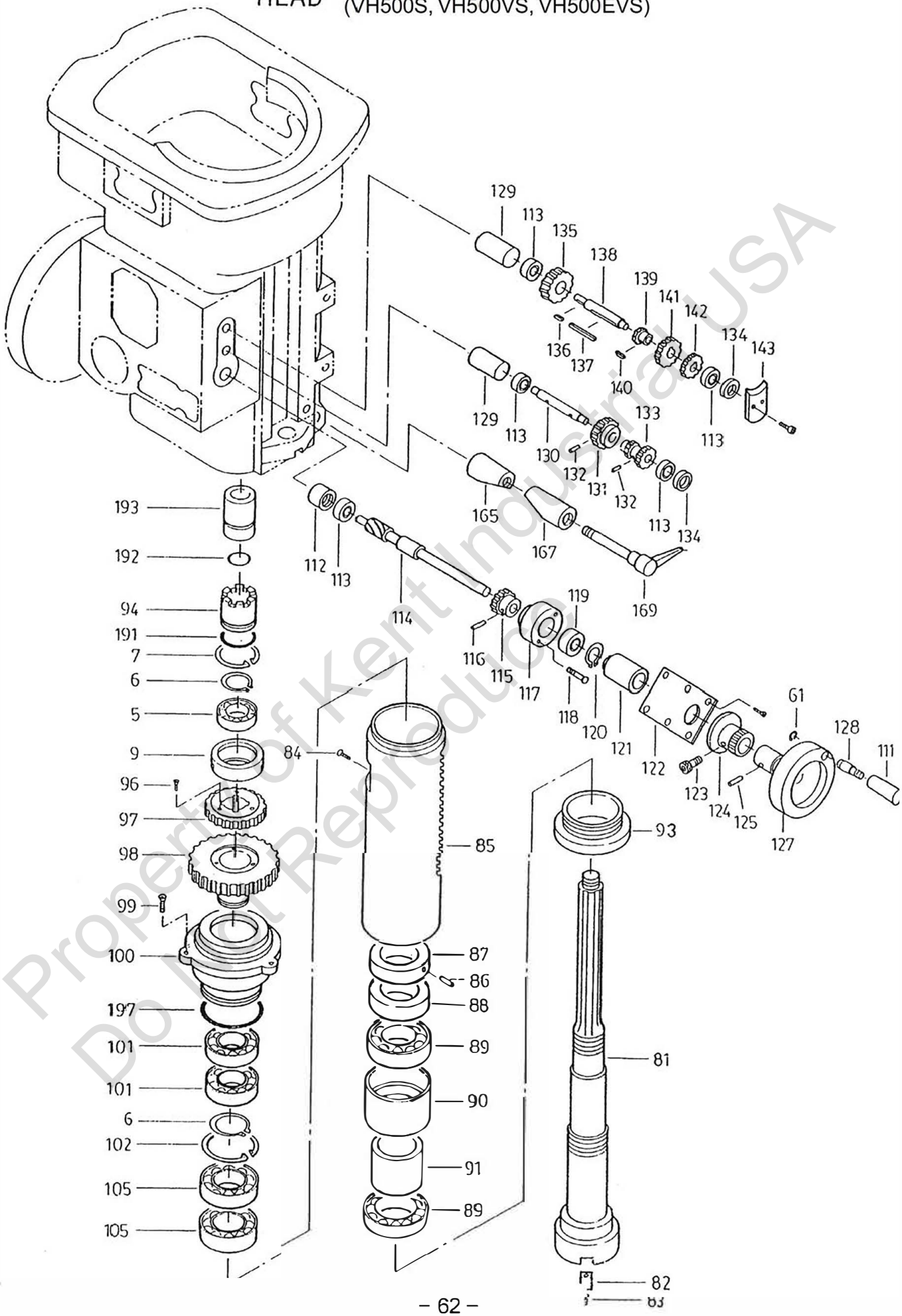

Property of Kent Industrial USA
Do Not Reproduce

HEAD (500S, 500VS, 500EVS) (VH500S, VH500VS, VH500EVS)

NO	MANE	NO	MANE
1	Taper Roller Bearing	36	Head Swivelling Scale Ring
2	Snap Ring	37	Set Screw
3	Backgear	38	Socket Screw
4	Bearing Support Ring	39	Trade Mark
5	Ball Bearing	40	Pin
6	Snap Ring	41	Feed Gear Shift Fork
7	Snap Ring	42	Pin
8	Flat Hd Set Screw	43	Pin
9	Bearing Cover	44	Shift Crank
10	MC-Nylon Gear	45	Taper Pin
11	Gear Sleeve	46	Eccentric Shaft
12	Backgear Spline Shaft	47	Cluster Gear-Cover
13	Ball Bearing	48	Socket Screw
14	Ball Bearing	49	Feedrate Plate
15	Bearing Cover (A)	50	Quill Pinion Shaft Bushing
16	Flat Hd Set Screw	51	Spring Washer
17	Worm Shaft	52	Socket Screw
18	Sliding Key	53	Worm whed
19	Oil Seal	54	Overload Clutch Ring
20	Bearing Sleeve	55	Snap Ring
21	Ball Bearing	56	Overload Clutch Sleeve
22	Snap Ring	57	Overload Clutch
23	Feed Clutch Gear	58	Safety Clutch Spring
24	Taper Roller Bearing	59	Locknut
25	Bearing Cover	60	Clutch Ring
26	Eccentric Shaft	61	Snap Ring
27	Power Feed Cover	62	Set Screw
28	Socket Screw	63	Spring
29	Rivet	64	Trip Pluger
30	Feed Clutch Indicating Plate	65	Cam Rod
31	Steel Ball	66	Snap Ring
32	Spring	67	Pin
33	Knock Pin	68	Bracket
34	Dial	69	Socket Screw
35	Dial Indicating Plate	70	Pin

Property of Kent Industrial USA
Do Not Reproduce

HEAD (500S, 500VS, 500EVS) (VH500S, VH500VS, VH500EVS)

NO	MANE	NO	MANE
71	Set Screw	106	Spring Housing
72	Ball Head Pin	107	Spring
73	Spring	108	Washer
74	"CAUTION" Plate	109	Pin
75	Overload Clutch Trip Lever	110	Feed Engage Lever
76	Trip Lever Cover	111	Plastic Handle
77	Socket Bolt	112	Cylindrical Block
78	Hex Nut	113	Ball Bearing
79	Set Screw	114	Wormshaft
80	Socket Bolt	115	Gear
81	Vertical Spindle	116	Knock Pin
82	Key	117	Worm Shaft Bearing Housing
83	Socket Screw	118	Socket Bolt
84	Socket Screw	119	Ball Bearing
85	Quill	120	Snap Ring
86	Set Screw	121	Spacer
87	Locknut	122	Microfeed Plate
88	Collar		Microfeed Plate
89	Ball Bearing	123	Rd Hd Screw
90	Outer Collar	124	Microdial
91	Inner Coller		Microdial
92	Oil Seal	125	Microdial Screw
93	Nose-Piece	126	Knock Pin
94	Clutch Sleeve	127	Microfeed Handwheel
95	Bearing Support Ring	128	Handle Screw
96	Socket Screw	129	Cylindrical Block
97	Spindle Gear Cluster	130	Gear Shaft
98	Spindle Gear Cluster	131	Gear
99	Socket Screw	132	Knock Pin
100	Bearing Housing	133	Gear Cluster
101	Ball Bearing	134	Spacer
102	Snap Ring	135	Wormwheel
103	Locknut	136	Key
104	Washer	137	Sliding Key
105	Ball Bearing	138	Sliding Gear Shaft

Property of Kent Industrial USA
Do Not Reproduce

HEAD (500S, 500VS, 500EVS) (VH500S, VH500VS, VH500EVS)

NO	MANE	NO	MANE
139	Gear	171	Lever
140	Key	172	Sliding Key
141	Gear	173	Pinion Shaft
142	Gear	174	Key
143	Enclose Plate	175	Set Screw
144	Set Screw	176	Balance Spring
145	Set Screw	177	Spring Housing
146	Hex Nut	178	Socket Screw
147	Feed Disengage Lever	179	Pin
148	Pin	180	Pinion Shaft Hub Sleeve
149	Snap Ring	181	Lever Collar
150	Quill Micro-Stop Nut	182	Lever
151	Micrometer Nut	183	Plastic Handle
	Micrometer Nut	184	Head Housing
152	Quill Stop Micro-Screw	185	Eccentric Shaft
153	Quill Stop Knob	186	"H-L" Cover
154	Scale Indicator	187	"H-L" Indicating Plate
155	"T" Piece	188	Backgear Fork
156	Rd Hd Screw	189	Fork Post
157	Socket Screw	190	Oil Nipple
158	Rd Hd Screw	191	O- Ring
159	Quill Cover	192	O- Ring
160	Dust Guard	193	Bushing
161	Rd Hd Screw	194	Handle Hub
162	Quill Travel Scale	195	Oil Seal
	Quill Travel Scale	196	Oil Lever Gage
163	Set Screw	**197**	**O-Ring**
164	Pad		
165	Quill Lock Sleeve Tapped		
166	Spring		
167	Drilled Lock Sleeve		
168	Washer		
169	Bolt		
170	Lock Postition Indicating Plate		

Property of Kent Industrial USA
Do Not Reproduce

COLUMN KNEE (VH500EVS)

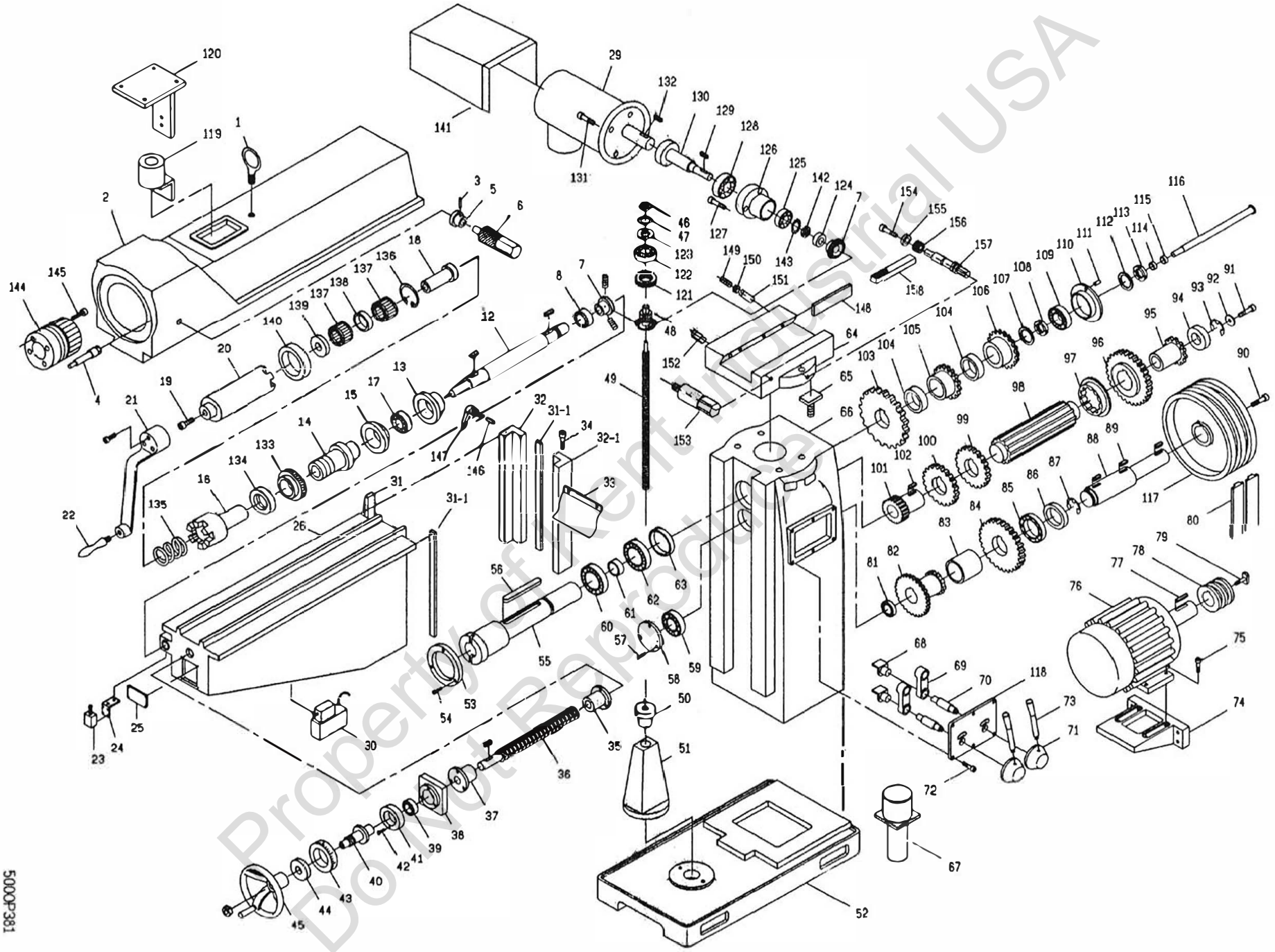

Property of Kent Industrial USA
Do Not Reproduce

5000P381

COLUMN KNEE

NO	NAME	NO	NAME
1	Hook	42	Hex.Socket Head Bolt
2	Arm	43	Dial Ring
3	Spring Pin	44	Dial Lock Nut
4	Bolt	45	Handle Wheel
5	Flange	46	Nut
6	Worm	47	Washer
7	Bevel Gear	48	Bevel Gear
8	Ball Bearing	49	Leed Screw
9	Lock Handle	50	Nut
10	Block	51	Leed Screw Housing
11	Set Screw	52	Base
12	Shaft	53	Fixed Ring
13	Baring Support	54	Hex.Socket Head Bolt
14	Shaft	55	Spindle
15	Baring Stop	56	Key
16	Clutch Shaft	57	Hex.Socket Head Bolt
17	Ball Bearing	58	Cap
18	Needle Shaft	59	Ball Bearing
19	Hex.Socket Head Bolt	60	Ball Bearing
20	Clutch Sleeve	61	Spacer
21	Elevating Crank	62	Ball Bearing
22	Handle	63	Spacer
23	Limiter	64	Swivel Base
24	Limiter Set	65	Bolt
25	Cover	66	Column
26	Knee	67	Coolant Pump
28	Set Screw	68	Block
29	Motor	69	Control Block
30	Lubrication Pump	70	Control Shaft
31	Gib	71	Hand Block
32	Gib Holder-L	72	Hex.Socket Head Bolt
32-1	Gib Holder-R	73	Handle
33	Chip Guard	74	Motor Blocket
34	Adjusting Screw	75	Hex.Socket Head Bolt
35	Nut	76	Motor
36	Lead Screw	77	Key
37	Nut	78	Pully
38	Baring Stop	79	Lock Screw
39	Spacer	80	Belt
40	Dial Holder	81	Ball Bearing
41	Baring Stop	82	Gear

5000P389

Property of Kent Industrial USA
Do Not Reproduce

COLUMN KNEE

NO	NAME	NO	NAME
83	Spacer	124	Washer
84	Gear	125	Ball Bearing
85	Ball Bearing	126	Bearing Bracket
86	Spacer	127	Hex.Socket Head Bolt
87	C– Ring	128	Bearing Bracket
88	Shaft	129	Key
89	Key	130	Shaft
90	Hex.Socket Head Bolt	131	Hex.Socket Head Bolt
91	Hex.Socket Head Bolt	132	Key
92	Cap	133	Dial
93	Spacer	134	Lock Nut
94	Ball Bearing	135	Spring
95	Gear	136	C– Ring
96	Gear	137	Needle Bearing
97	Gear	138	Spacer
98	Gear Shaft	139	Washer
99	Gear	140	Collar
100	Gear	141	Cover
101	Gear	142	Nut
102	Key	143	Washer
103	Gear	144	Head Tilt Block
104	Spacer	145	Hex.Socket Head Bolt
105	Gear	146	Brass Block
106	Gear	147	Lock Handle
107	Lock Washer	148	Gib
108	Lock Nut	149	Set Screw
109	Ball Bearing	150	Nut
110	Flange	151	Block
111	Hex.Socket Head Bolt	152	Lock Block
112	Lock Washer	153	Lock Handle Shaft
113	Lock Nut	154	Hex.Socket Head Bolt
114	Nut	155	Washer
115	Washer	156	Gear
116	Drawbar	157	Ram Pinior
117	Pully	158	Rack
118	Leed Screw		
119	Pump		
120	Pump Sets		
121	Thrust Bearing		
122	Ball Baring		
123	Washer		

5000P388

Property of Kent Industrial USA
Do Not Reproduce

RAM ASSEMBLY (500S, 500VS, 500EVS)

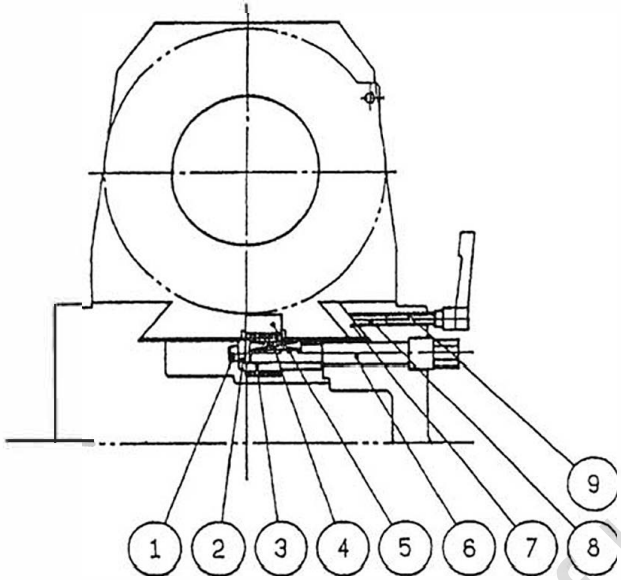

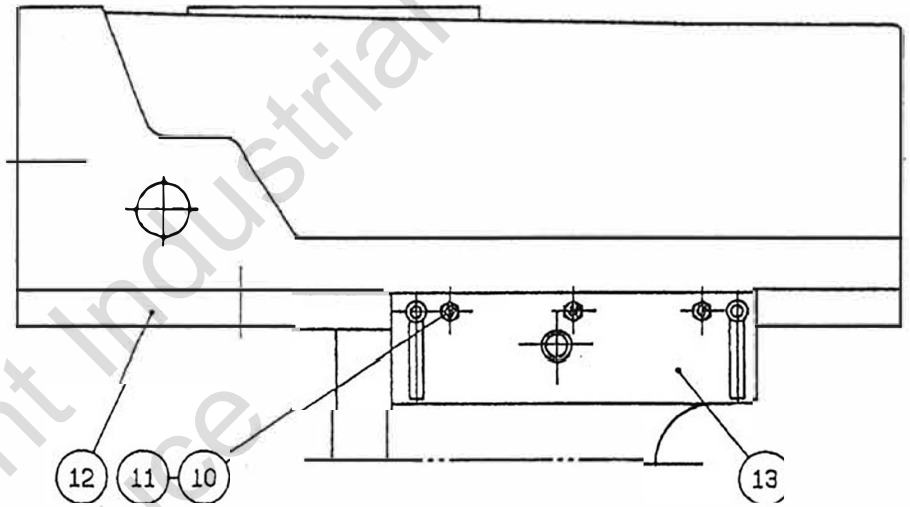

ITEM	PART NO.	NAME
13	300-C092	Column
12	R-75A	Ram
11	M10	Nut
10	M10x60L	Set Screw
9	SC-9	Lock Bolt
8	C-46	Ram Lock Plunger
7	300-C093	Gib
6	300-C091	Ram Pinion
5	R-67	Rack
4	5x5x30L	Key
3	R-62	Gear
2	R-63	[illegible]
1	M6x20L	Hex. Socket Bu[illegible]

360OP102
S: 1/3

Property of Kent Industrial USA
Do Not Reproduce

KNEE TYPE VERTICAL HORIZONTAL TURRET MILLING MACHINE
INSPECTION RECORD

Model: Mfg. No: Date: Unit:mm

No.	Test to be applied		Fig	Permissible error	Measure value
1	Leveling of work table	In longitudinal direction	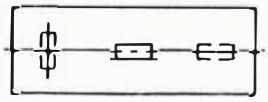	0.06/1000	
		In transverse direction		0.06/1000	
2	Runout of spindle	In radial direction		0.01	
3	Longitudinal movement of spindle nose	In axial direction		0.015	
4	Runout of internal taper	Nearest to spindle nose	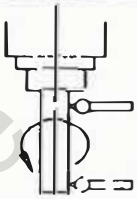	0.01	
		At a distance of 300mm		0.02	
5	Surface of work table parallel with its jongitudinal movement		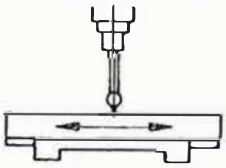	0.03	
6	Surface of work table parallel with its transverse movement		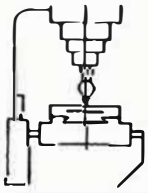	0.02/300	
7	Center T-slot parallel with longitudinal table movement		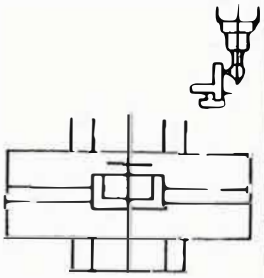	0.03	
8	Center T-slot parallel with longitudinal table movement		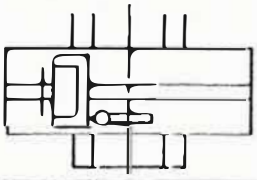	0.02/300	

Property of Kent Industrial USA
Do Not Reproduce

No.	Test to be applied		Fig	Permissible error	Measure value
9	Vertical adjustment of cutter slide square with work table in plane	In longitudinal direction		0.025/300	
		In transverse direction (table rising towar dsthe front side)		0.025/300	
10	Column ways for knee square with work table	Lateral incline towards front and rear side		0.02/300	
		Incline towardsfrontand rear side. respectively		0.02/300	
11	Work table square with cutter spindle in plane	Through longitudinal axis(table rising towards the front side only)		0.02/300	
		Perpendicular to that through longitudinal axis		0.02/300	
12	Runout of spindle	In radial direction		0.01	
13	longitudinal movement of spindle nose	In radial direction		0.015	
14	Cutter spindle: Internal taper runs out of turth(use testing bar)	Nearest to the spindle nose		0.01	
		At distance of 300mm		0.02	
15	Work table parallel with cutter spindle	Table rising otwards front side		0.02/300	
16	Transverse movement of table parallel with cutter spindle	In vertical plane		0.02/300	
		In horizontal plane		0.02/300	

Property of Kent Industrial USA
Do Not Reproduce