KENT CNC

INSTRUCTION MANUAL & PART LIST

CAC-Series CNC Lathe

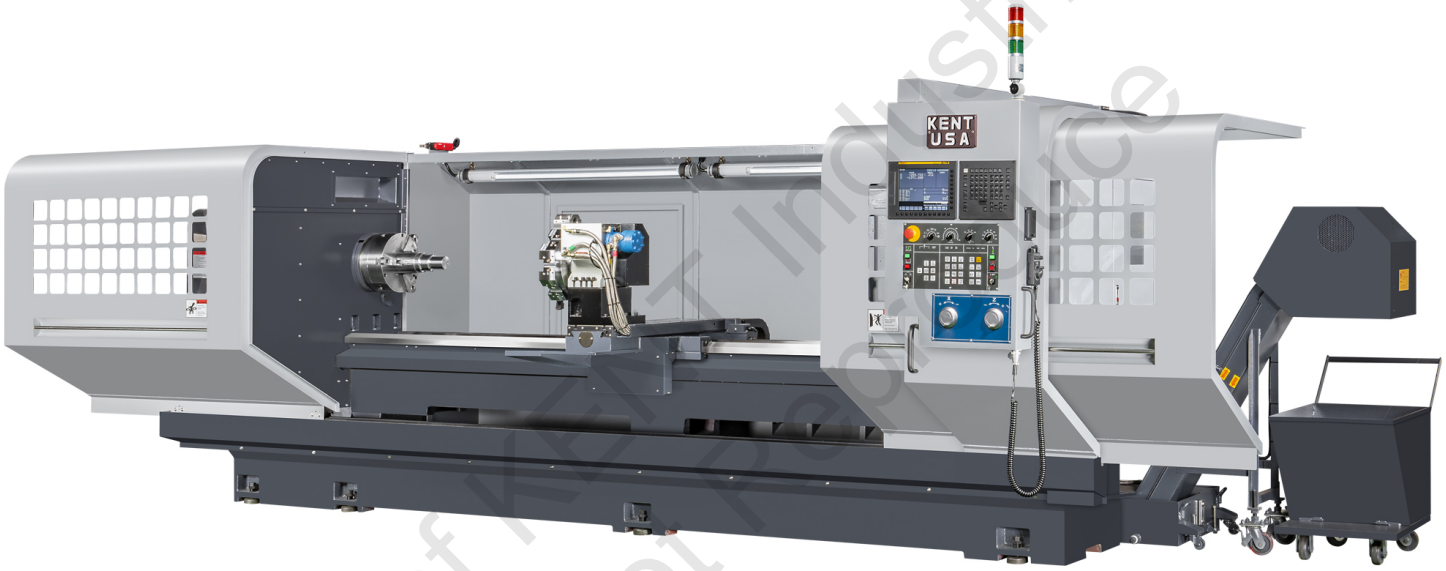

Model: 2660 2680 26120 26160
3060 3080 30120 30160

Index

EC Declaration of Conformity

CE

Manufacturer:

KENT Industrial (USA) Inc.

Address:

1231 Edinger Avenue, Tustin, CA, 92780 USA
TEL: (714) 258-8526
FAX: (714) 258-8530

Authorized representative

Safenet Limited, Denford Garage Denford Kettering
Northamptonshire NN14 4EQ, UK are authorized to compile the technical file.
Tel: +44 1832 732174
E-mail: office@safenet.co.uk

Declares that the machinery described:

Name: CNC Lathe
Model: CAC-26,CAC-30

Conforms to the following directives:

Machinery Directive 2006/42/EC
Low voltage Directive 2014/435/EC

Refers to the following standards:

EN ISO 12100: 2010	**EN ISO 13850: 2015**	**EN 60204-1: 2006+A1:2009**
EN ISO 4413: 2010	**EN ISO 4414: 2010**	**EN ISO 13849-1: 2015**
EN ISO 14120: 2015	**EN ISO 23125: 2015**	

1. SAFETY INSTRUCTIONS

Observe the following instructions at all times while using this machine. Try to prevent any possible accidents.

1.1 PERSONAL SAFETY

1) Wear protective safety glasses at all times while using this machine.
2) Never wear loose or unsafe clothes such as necktie or long sleeves garment.
3) Retain long hair by using a cap/hat or a net.
4) Remove all jewelry before operating this machine such as rings, watches and necklaces.
5) Always wear safety outfit such as safety shoes and safety helmet.
6) Take off gloves before turning on the machine.
7) Un-qualified operators are not allowed to operate the machine before they received a training course.

1.2 GENERAL SAFETY

1) Ensure work piece is securely fastened to prevent accidental rotation while operating.
2) Remove any unnecessary tools from the machine before starting the machine, such as adjusting key and wrench.
3) Always keep work area clean, dry, not oily and well illuminated.
4) Keep proper footing and balance at all times.
5) Never do the job beyond the tool and/or attachment's capacity.
6) Keep tools sharp and clean for the best and safest performance.
7) Use proper tools with correct speed and feeding.
8) No one should present within the machine area during operation other than the designated operator.

9)	Do not bump or accidentally touch any machine control device; otherwise an unintended machine movement may be caused.
10)	Do not clean the machine and/or blow away the chips by compressed air.
11)	Do not clean the machine and/or the area around the machine by water.
12)	Never touch the machine control device or electrical component by wet hand(s).
13)	Keep flammable liquids and materials away from the work area and hot chips.
14)	Never clean up chips while the machine is running or while the machine is in an automatic mode.
15)	Never touch spindle start or spindle jog control until hands, feet and body are well clear of the work area.
16)	The machine should be in either "**CONTROL OFF**" or "**POWER OFF**" mode in the end of the workday.
17)	The machine is designed only for cold metal material machining. Other purpose of working is prohibited. The materials, such as wood 、glass 、metal powder、ceramic and poisonous materials、magnesium，etc. are not allowed being used on this machine.
18)	The machine is prohibited to be used in potentially explosive atmosphere.
19)	The disposal of wastes, such as oil and glue, must comply with the local regulations.
20)	Please clean the coolant tank regularly, to avoid the bacteria pollution. Operators clean it should wear PPE. The users must put on plastic gloves to prevent contact harmful fluid e.g. cutting fluid, hydraulic. The user must apply tool e.g. shovel, with putting on gloves to handle swarf/chip
21)	Keep area around machine well light (>500 lux) and dry.
22)	The actual noise measuring results in factory is below 75 dB. (Measurement condition: leave machine body 1m distance and at 1.6m height from the floor, and 80% of maximum speed). If the noise pressure is over 80 dB(A) while operating, please wear proper ear defender.
23)	Three-Colors for indicator lights and their meanings with respect to the condition of the machine.

Color	Meaning	Explanation
Red	Emergency	The red light will be flashed by 0.5 seconds when the machine alert.
Yellow	Program end	The yellow light will be flashed by 0.5 seconds when the program is ended.
Green	Normal	The green light will be shining when machine is on normal operation.

Indicating towers on machines should have the applicable colors in the following order from the top down: Red, yellow , green.

24) If the personal is trapped by axes movement, then the release procedure is shown as below:

Power ON:

1. Press the emergency stop button to stop all movements.
2. Release the emergency stop button and push the reset button to make the machine ready.

3.Switch the mode selection to setting mode(manual mode)

4. Then push enable device with **Jog button** or electronic wheel to move the axes.

Power OFF:

1. Check the emergency stop button is released.
2. Power on the machine and push the **Reset button** to make the machine ready.

3. Switch the mode selection to **setting mode(manual mode)**

4. Then push enable device with **Jog button** or electronic wheel to move the axes.

1.3 SAFETY INSTRUCTION FOR WORKPIECE HOLDING

1) Never run a job on this machine until you are 100% sure the work piece is being held firmly in such a manner as to withstand the centrifugal force from rotation and the cutting forces from tools.

2) Manual chuck is the most common work piece holding device used on this machine. Please must use the correct chuck to prevent from any injury of improper use of chuck.

3) Please take the following precautions when using a manual chuck.

- Always use spring-loaded (self-ejecting) type safety wrench.
- Never put an extension bar on the chuck wrench or hit it with hammer.

- Never run a gear scroll chuck without having work piece chucked in the jaws because the centrifugal force can cause the scroll unwind if the chuck is empty. If this occurs, the jaws may come out of the chuck while the spindle is turning.

4) Hydraulic chuck and pneumatic chuck are also the common work piece holding devices used on this machine. Please must check the hydraulic or air pressure before every operation. Low chucking pressure will reduce jaw gripping force which may allow the work piece to come out of the jaws. Excessive pressure can damage a power chuck.

5) The gripping force of the power chuck can be reduced as much as 50% because of lack of lubrication or lack of periodic cleaning. Components of the chuck are subject to wear and damage which also can reduce its gripping force. Please:

- Grease the chuck at the beginning of every shift.
- A weekly examination of the condition such as gripping force of the chuck should be made.

6) Always be sure the chuck or accessory is located correctly on the spindle nose and it is securely bolted to the face of the spindle.

7) Proper lifting equipment should be used for heavy chucks, fixtures and work pieces is over 10kg.

8) If a work piece is extended from the chuck a distance of over 3 times of its diameter, we strongly suggest using tailstock to support the work piece to prevent from the poor cutting condition.

1.4 SAFETY INSTRUCTION FOR MAINTENANCE

1) High voltage is used to power the machine. Only the authorized electricians can be accepted to correct any electrical component. Disconnect main power and lock in off position before attempting any repair. Tag with "DO NOT START" on disconnected switch.

2) Know all points where high voltages are presented on this machine and in electrical cabinet.

3) Residual voltages can exist in the electrical cabinet for a period of time after power has been turned off. Check any components inside cabinet with a meter before touching.

4) Use correct grease, lubricant and coolant as suggested.

1.5 SAFETY INSTRUCTION FOR INSTALLATION

1) Verify machine weight and make sure lifting equipment, cables and fixtures are rated at sufficient

	capacity.
2)	Firm all the moving parts during transportation.
3)	All the connecting lines must be checked to assure there are wired correctly. The earth line must be correctly connected onto the ground.

1.6 PRECAUTIONS FOR INSTALLATION

To ensure the safe operation of this CNC lathe, please note the followings during installation.

1) Arrange the qualified electric engineer to connect the power lines.

2) Properly connect the grounding wire (earth line).
Best Independent Grounding:

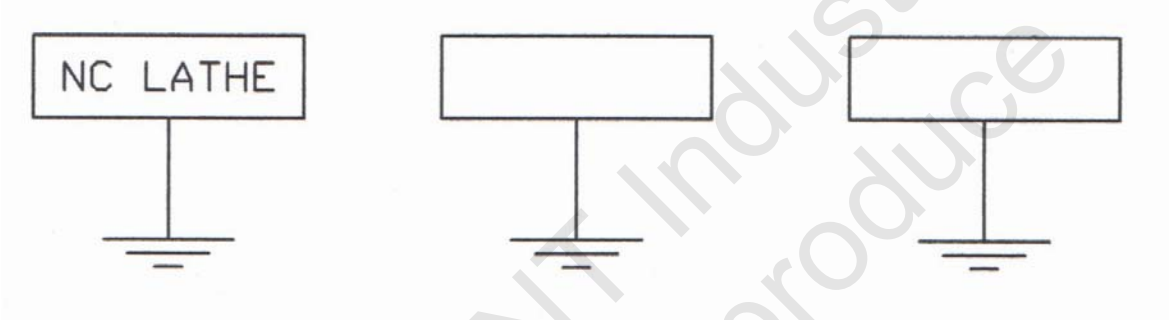

Acceptable Grounding:
(Earth resistance: 100 ohms per each unit)

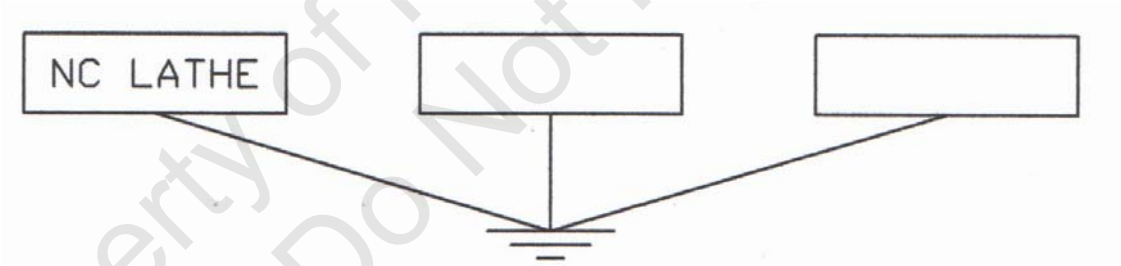

Do not ground as follow:

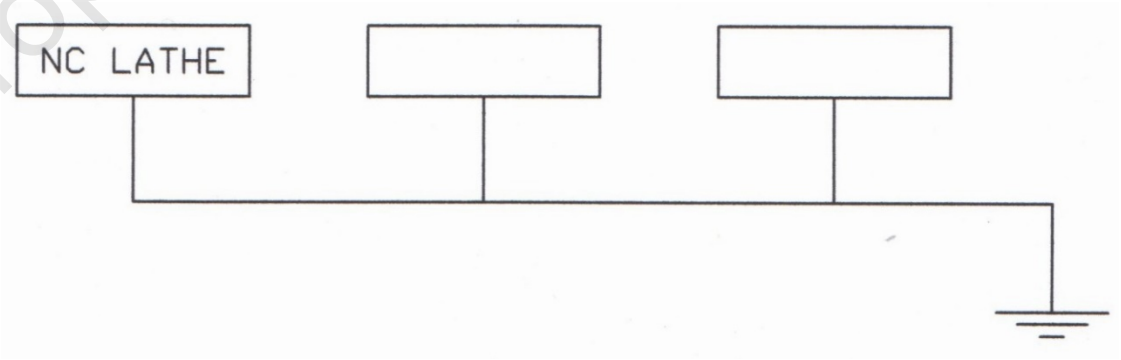

3) Voltage and frequency of power supply should be constant.

4) This machine should be operated under the environment of 0°C to 45°C and humidity less than 80%.

5) This machine should not be exposed to direct sunlight, heat rays or abnormal vibration.

1.7 PRECAUTIONS FOR SAFETY

This machine is provided with a number of safety devices to protect personnel and equipment from injury and damage. Operators must fully understand the precautions by reading the following remarks thoroughly before operation.

1.7.1 BASIC OPERATING PRACTICES

DANGER:

Do not touch the control panels, transformers, motors and other parts with high voltage terminals.

WARNING:

1) Switch off the machine before replacing a fuse.
2) Sufficient working space is required to avoid hazardous falls.

3) All floors must be dry and clean to prevent from slipping hazard.

4) Never touch a switch accidentally.

CAUTION:

1) In the event of power failure, turn off the main circuit breaker immediately.

2) Use the recommended hydraulic oils, lubricants and grease or acceptable equivalents.

3) Prevent the CNC controller unit, operating panel and electric control panel from shocks. It could cause a failure or malfunction.

4) Do not change parameters, volumes and other electrical settings. If such changes are unavoidable, record the values prior to the change.

1.7.2 BEFORE SWITCHING ON

DANGER:

The damaged insulation of cables, cords or electric wires do cause current leaks and using these parts.

WARNING:

1)Be sure the instruction manual and the programming manual are fully understood. Every function and operating procedure should be completely cleared.

2) Wear safety shoes, safety glasses and other safety protection.

3)Close all the doors and covers of CNC controller, operating panel and electric control panel.

CAUTION:

1) The power cable from the factory to the circuit breaker for the machine should have a sufficient capacity to handle the electric power used.

2) Cables needs to be laid on the floor must be protected properly to prevent from short-circuits.

3) Before first operating this machine after unpacking or long time no use, all the slides must be freshly lubricated.

4) Check and add the recommended lubricant and coolant frequently. Switches and levers should be operated smoothly.

1.7.3 ROUTINE INSPECTION

WARNING:

When checking belt tension, do not put your fingers between the belt and pulley.

CAUTION:

1) Check the pressure gauges for proper readings.
2) Check motors and gear box for abnormal noise.
3) Check the sliding parts for proper lubrication.
4) Check safety covers and all safety devices for proper operation.

5) Check belt tension and belt condition.

1.7.4 PREPARATIONS

WARNING:

1) Tooling should comply with the machine specifications and dimensions.

2) Keep the tools in sharp at all times.
3) The work area must be clean, dry, not oily and well illuminated.

4) Tools or any goods must not be put on the headstock, turret, carriage and covers.

5) The work piece must be held firmly.

CAUTION:
1) Tooling length should be within specified tolerances to prevent interference.
trial run firstly.
2) After installing the tools, make a trial run firstly.

1.7.5 OPERATION

WARNING:
1) Do not work with long hair. Tie it up at the back.
2) Do not operate switches with gloves.
3) Grip the work piece securely.
4) Stop the machine before adjusting the coolant nozzle.
5) Never touch the turning work piece or spindle.
6) Stop the machine before removing chips.
7) Stop the machine before installing, adjusting and removing a tooling.
8) Suggest wearing safety glasses and protective mask.

CAUTION:
1) Never open the machine door during automatic operation mode.

2) Coolant must be properly applied to the tooling and work piece.

1.7.6 TO INTERRUPT MACHINING

WARNING:
Must turn off the power switch whenever you leave the machine.

1.7.7 COMPLETING A JOB

CAUTION:
1) Turn off the power switch and circuit breaker before any further work such as cleaning the machine, removing chips and cleaning cover windows.

2) Return each machine component to its initial position.
3) Check the wipers and replace the broken wipers.
4) Check coolant, hydraulic oil and lubricant for contamination and change them if they are

seriously contaminated.

5) Check coolant, hydraulic oil and lubricant levels. Add them to high level if it's necessary.

6) Clean the oil filters.

1.7.8 MAINTENANCE WORK

DANGER:

1) Turn off the power switch and circuit breaker before maintenance work.

2) For safety reason, prepare a warning tag showing "Do NOT touch the switches! Maintenance work is now in progress" or similar wording to hang it up on circuit breaker and operating panel.

WARNING: 警告

1) Maintenance work should be done by a qualified engineer.

2) Over travel limit switches, proximity switches and interlock mechanisms should not be removed or modified.

3) For safety reason, fuses, cables and all electrical parts must be made by qualified manufacturers.

1.7.9 FIRST OPERATION AFTER MAINTENANCE

WARNING:

1) Wipe water and oil off the parts and provide safe working environments.

2) All the parts and waste oil should be removed far enough away from the machine.

CAUTION:

1) The maintenance engineer should check the machine operating safely.

2) Keep records of the maintenance and inspection data for reference.

1.8 WARNING SIGNS AND SAFETY DEVICE ON THE MACHINE

Every operator must strictly comply with the warning signs on the machine. Do not tear off the warning signs on the machine.

➢Drawing for front side of the machine:

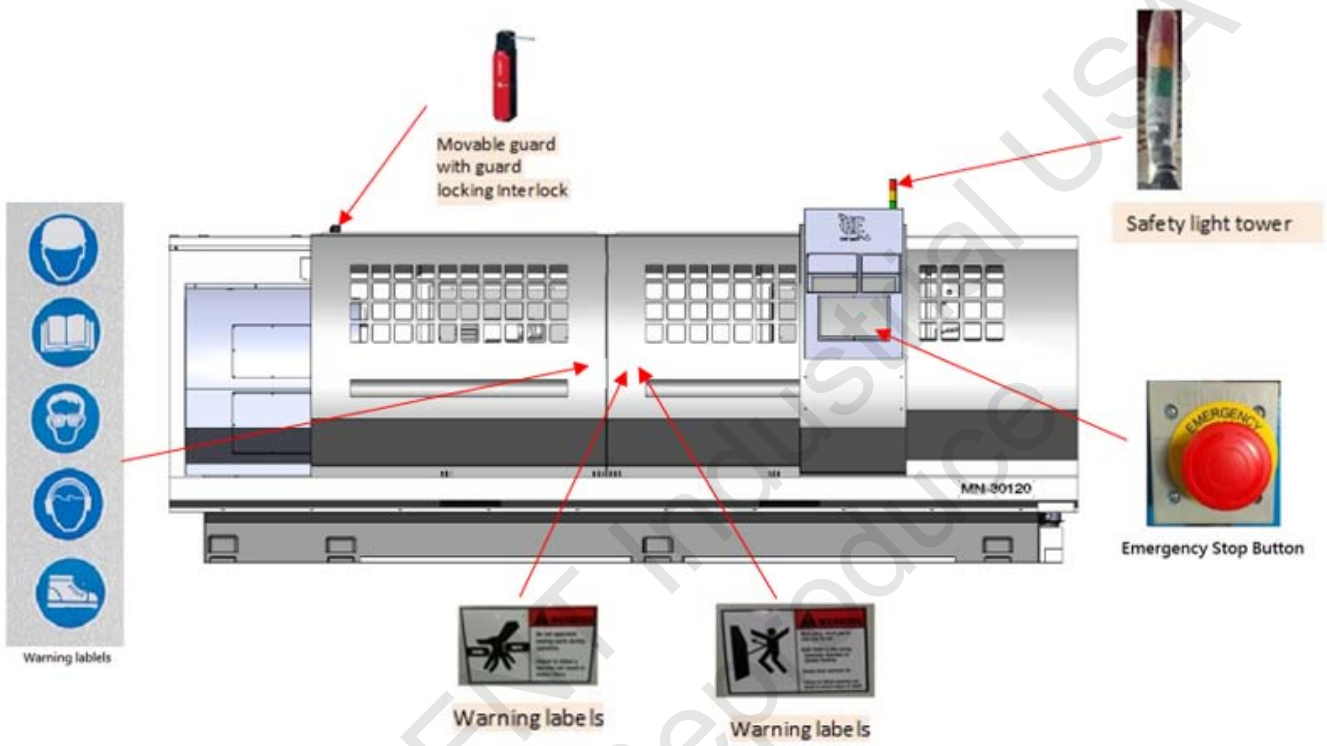

➢Drawing for left side of the machine:

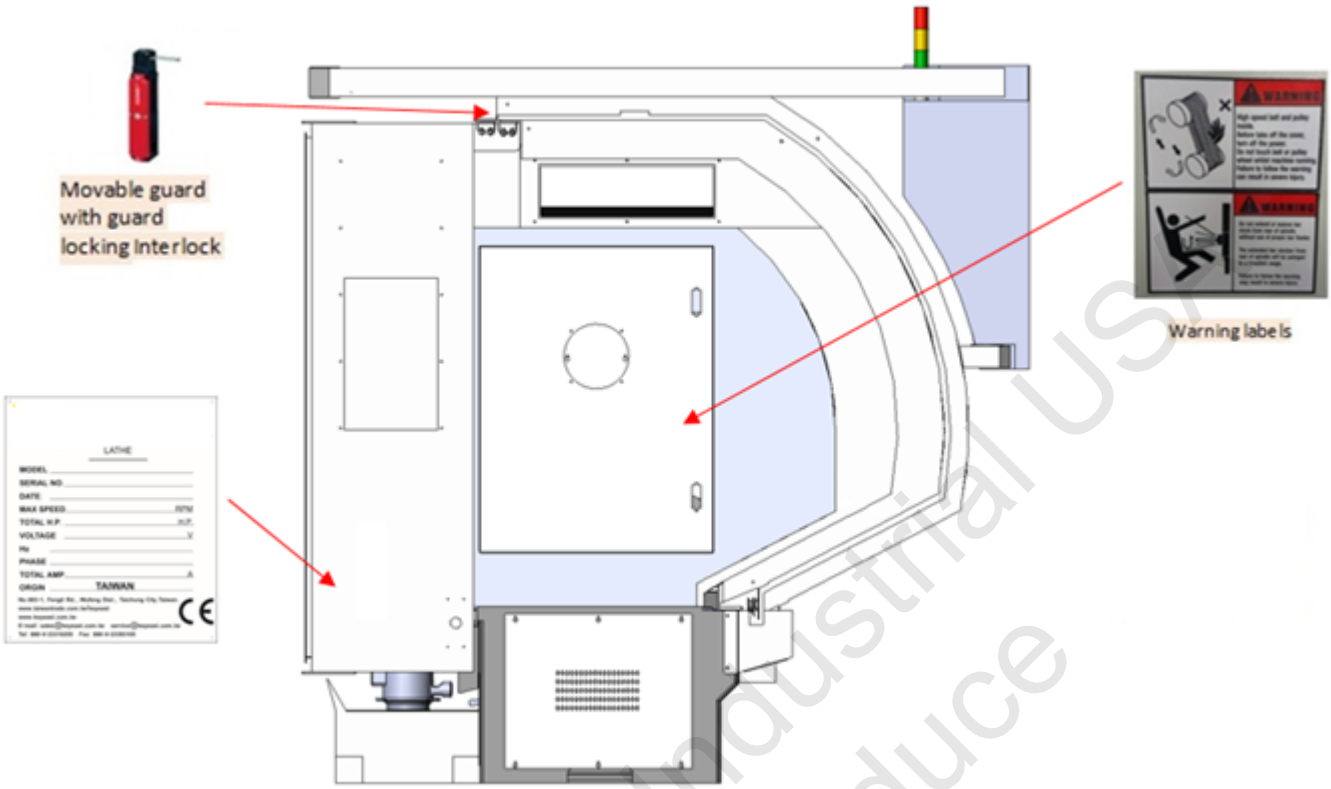

➢Drawing for rear side of the machine:

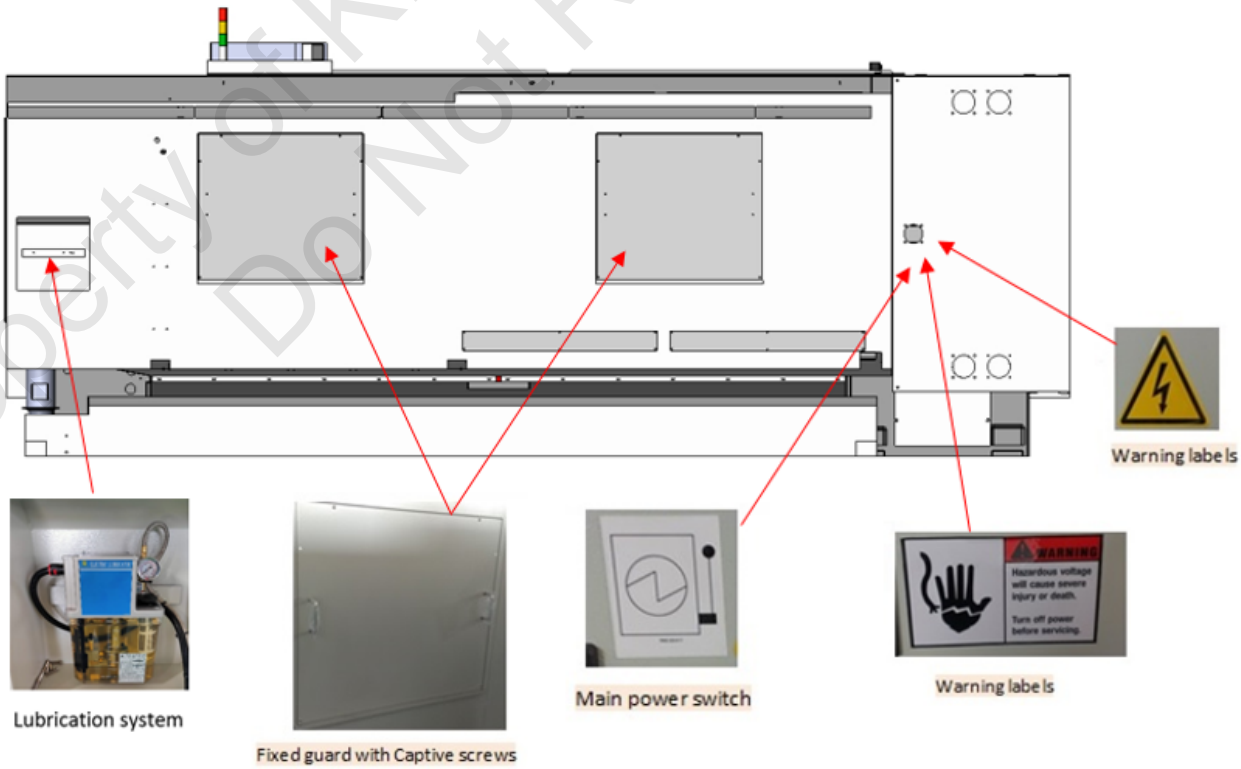

➢Drawing for right side of the machine:

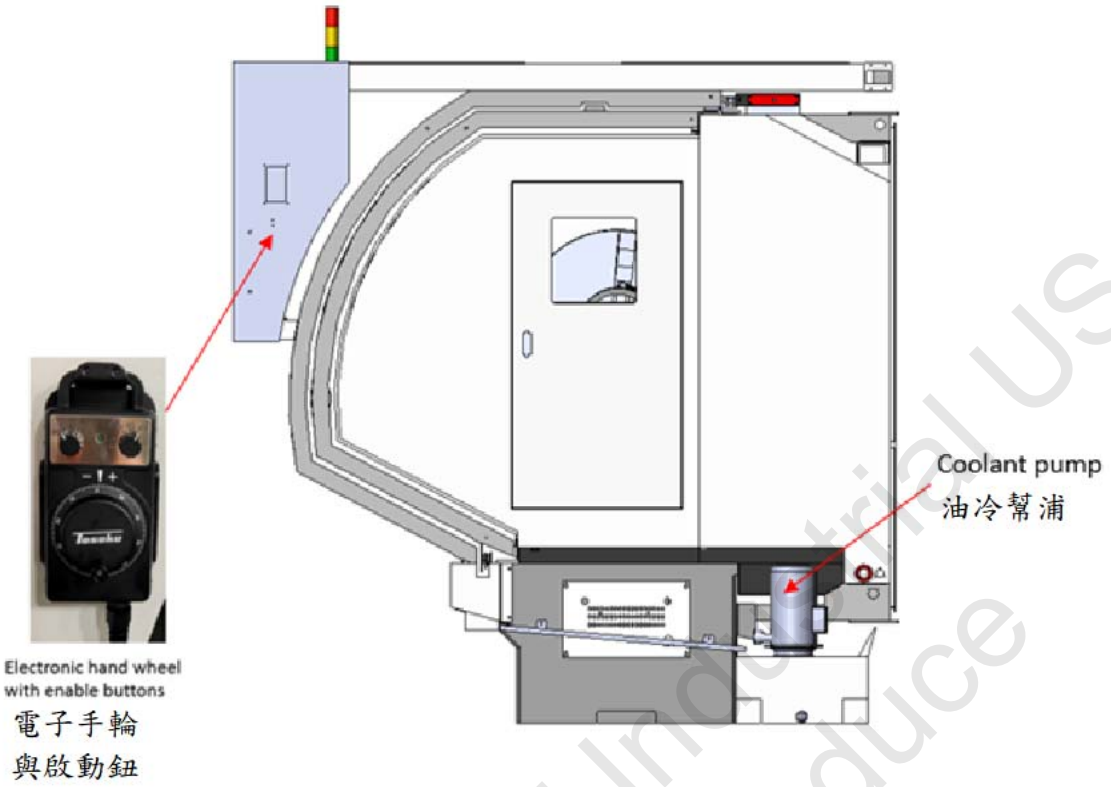

1.9 Description of WARNING SIGNS AND SAFETY DEVICE

SIGN	Description
	**Electric shock warning**
	**Electric shock warning**
	**Work piece, check or chip fly out warning**
SIGN	**Description**

	**Entanglement warning**
	**Crush warning**
	**Entanglement warning**

	**Transportation position**
	**Safety helmet**
	**Safety shoes**
	**Ear defender**

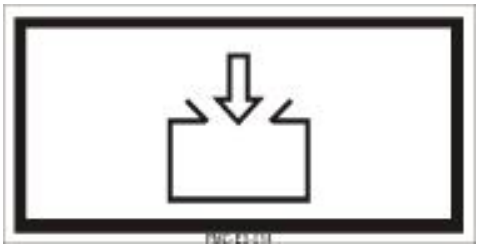	**Fill inlet**
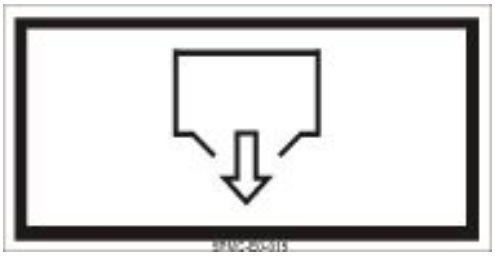	**Drain outlet**
PE	**Protective ground connect**
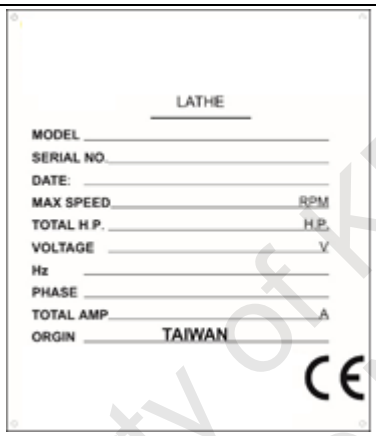	**Nameplate**
	**CE marking**

	**Interlock device without guard locking on the movable guard to prevent mechanical hazards**
	**Interlock device with guard locking on the movable guard to prevent mechanical hazards**
 	**Emergency stop button for power off the machine when in emergency situation** (Turn (or Pull) the " EMERGENCY STOP "button clockwise to clear emergency stop state.)
	Enable device for controlling the electronic hand wheel

1.10 OPERRATION POSITION

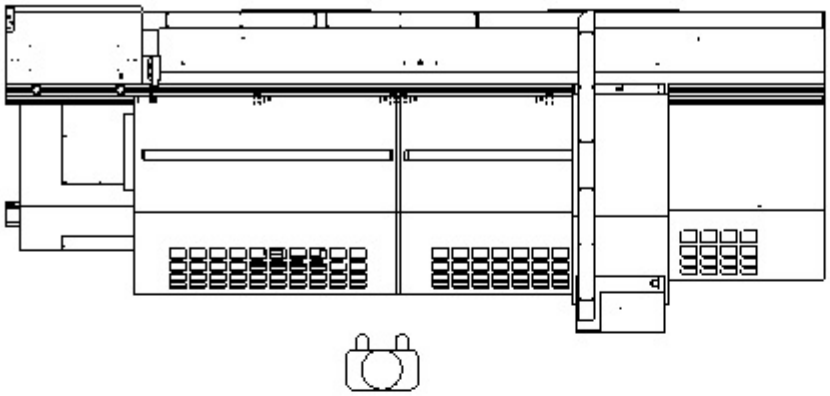

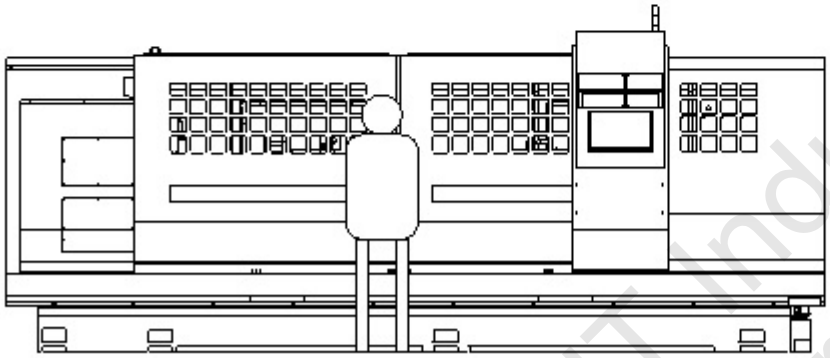

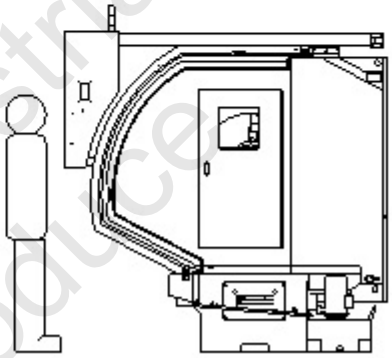

2. SPECIFICATIONS

Model	CAC-26/CAC-30
Swing over bed	660mm/760mm
Distance between centers	1420/1920/3080/3920mm
Swing over cross slide	440/540mm
Width of bed	450mm
Cross slide width	250mm
Spindle bore (mm) / spindle nose	105(A2-11) /155(A2-11)/230(A2-15)
Spindle speed range(3 steps auto change speed)	20-1500 rpm/20-1000 rpm/20-800 rpm
Main motor	15 Kw
X axis ball screw	32mm*P 5mm

Z axis ball screw	50mm*P 10mm
X axis travel	405mm
Z axis travel	1470/1970/3000/3970mm
X axis / Z axis servo motor	7Nm/20Nm
Tailstock quill diameter	105mm
Quill travel	250mm
Quill taper	M.T. #5
Controller	Fanuc 0i-TF(Plus)
Weight Net	4000/4300/5000/5700kgs
Weight Gross	4250/4650/5450/6250kgs
Packing size	L: 4000/4500/5500/6500mm W: 2300mm H: 2200mm

2.1 GENERAL LAYOUT

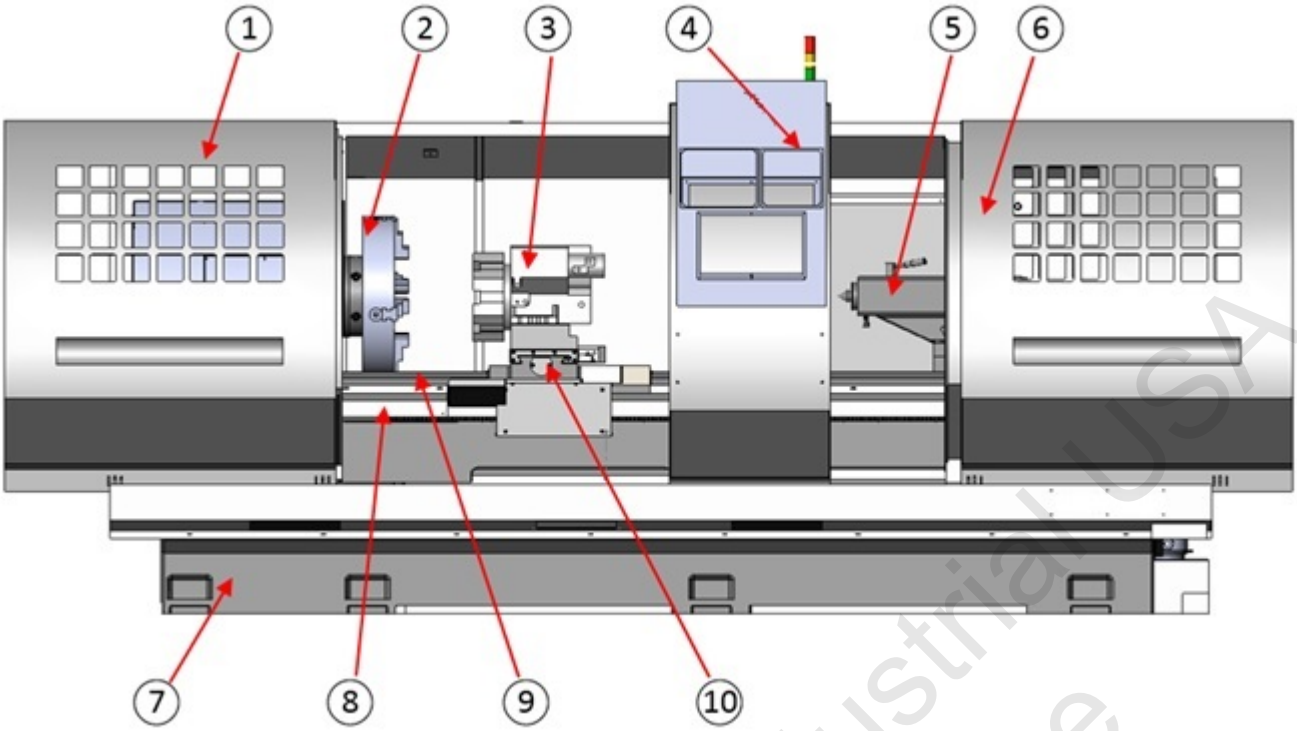

1. Left Door
2. 3-Jaw Chuck
3. Turret
4. Operation Panel
5. Tailstock
6. Right door
7. Base
8. Z-Axis Ball Screw
9. Bed Way
10. Carriage

2.2 DIMENSIONAL DRAWING

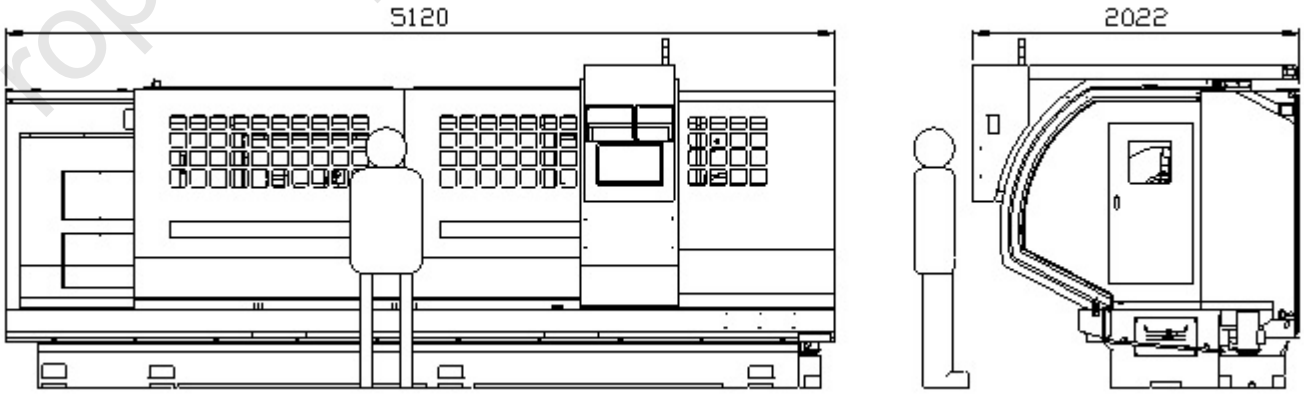

3. INSTALLATION

3.1 UNPACKING

Disassemble wooden case and remove the machine carefully to avoid damaging and check the machine against the packing list especially the optional accessories.

3.2 LIFTING MACHINE 起重機

Please use the following equipment to lift the machine:

1) Crane

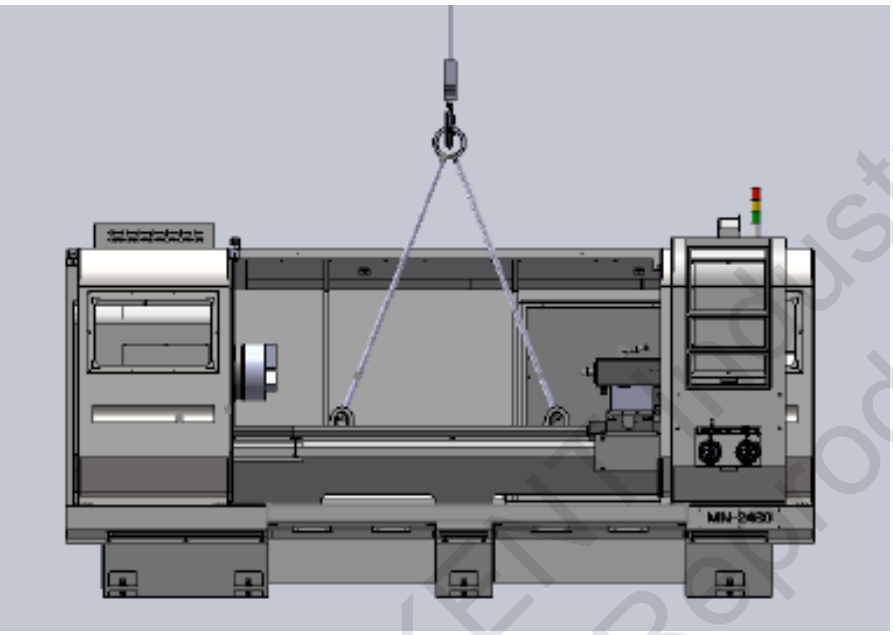

2) Forklift

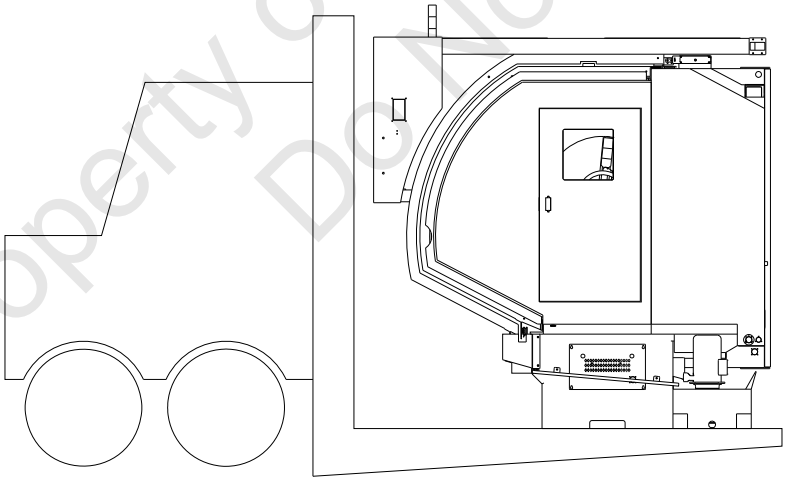

Note: Machine must be kept balanced at all times during lifting. The operator for both crane and fork lift should be qualified.

※ Proper lifting equipment should be used for heavy chucks, fixtures and work pieces is over 10kg

3.3 CLEANING MACHINE

Find a professional cleaning agent. Do not use gasoline or any other flammable material to clean the machine.

3.4 GENERAL PREPARATION & SELECTING LOCATION

A proper foundation and suitable location is required for an efficient and accurate operation of the machine. It is recommended to locate the machine away from the influence of damping, trembling and chemical gas. Do not expose the machine to the sunshine or in the rain. Please do not install this machine next to punching machine, planning machine and shaping machine. In order to prevent poor performance, a distance of at least 500mm is required from machine to wall, machine to objects, and/or between machines to ensure easy operation, cleaning and maintenance of machine.

3.5 FOUNDATION

This machine does not require a particular foundation but it is always good to have the foundation. 150mm thick of concrete on the floor is enough. Leave enough space for components' leveling. Do not use wood and/or soft material for foundation which may cause the machine moving gradually and losing leveling. If the machine is not installed on the ground floor, the stress of ceiling must be considered if the machine load can be offset.

3.6 FOUNDATION LAYOUT

Please make foundation holes as the following figures for setting foundation bolts. Make sure the cement is solid enough before moving the machine on the setting bolts.

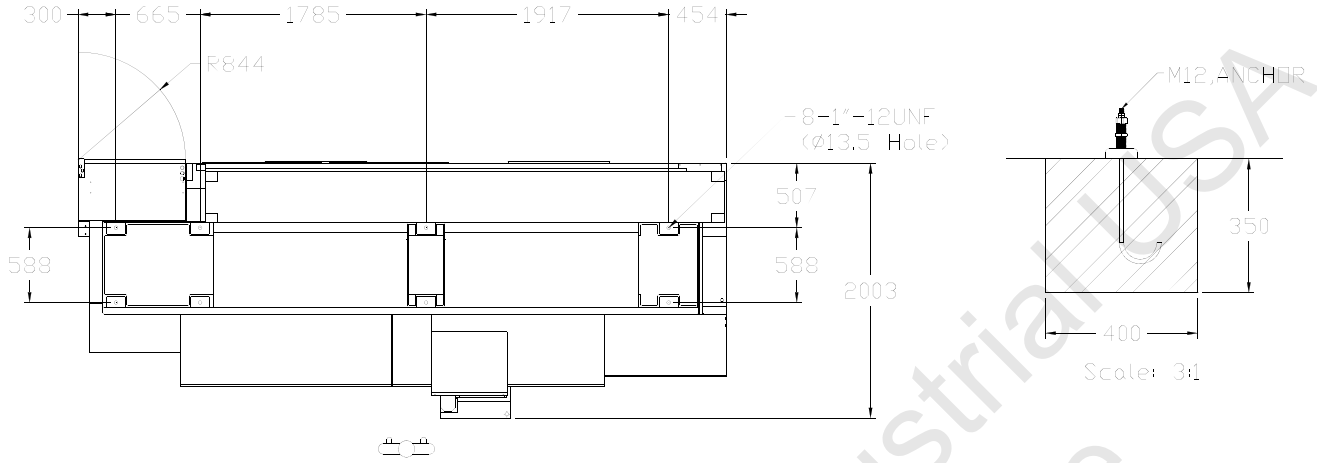

3.7 LEVELING MACHINE

It is necessary to level well before operating this machine.

Please prepare the following tools to adjust the leveling of this machine

1) Accuracy leveling gauge (spec. 0.02mm/1000mm or 0.001in/4ft)

2) Distortion

First, clean the table surface thoroughly and set one leveling gauge on the longitudinal direction and another one on the cross direction of the slide. Adjusting the 12 leveling bolts located at the bottom of the machine base (as shown in figure) until the machine is leveled within 2mm/1000mm on both directions. Lock the nuts and recheck the level whether the level of the machine is still in good. We recommend checking the level once a week for the first month and once a month after the first month.

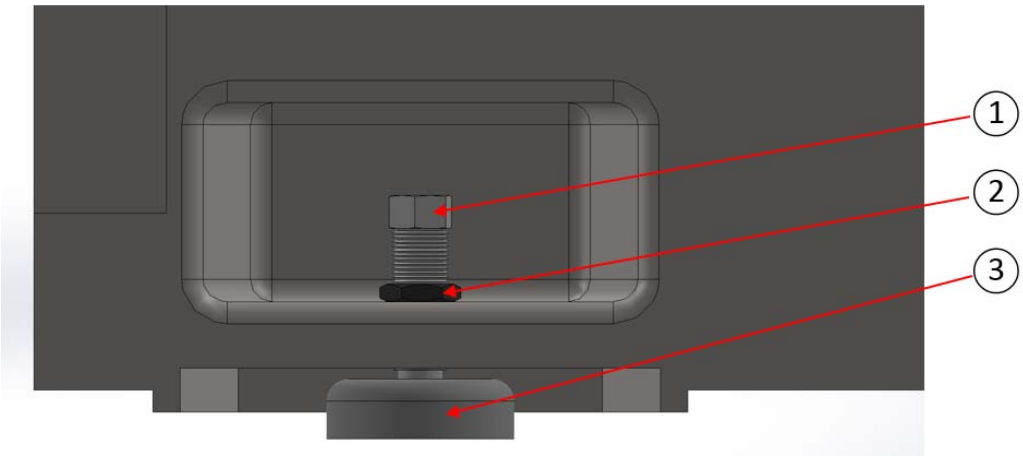

3.8 CONNECTION OF ELECTRIC POWER

1) Make sure the power supply is as same as the requirements such as voltage, currency and frequency of the machine.
2) Power wires, grounding and over-voltage protector should tally with the local electricity regulations.

3) Electric power connecting should be done by the qualified electric technician.

   Note: Do not turn on the machine if the voltage of power supply is different from the machine. Otherwise, the motor(s) may be burned-out.

4. LUBRICATION

4.1 AUTOMATIC LUBRICATION SYSTEM

This machine is equipped with an automatic lubrication system for supplying lubricant to the sliding ways, in order to last a longer life. Always check the lubricant level before operation.

We recommend using the following lubricant.

	Mobil	bp	Castrol	Esso		TEXACO
1	*	ENERGOL HLP 37	*	NUTE 37	TELLUS 37	*
2	VACTREA No. 2	MACCURAT 68	MAGNA BDX68	FEBIS K68	TONNA TX68	WAYLUBE X68

*EQUIVALENT OIL UNKNOWN USE OIL THAT MEETS ISO VG37 SPECIFICATION

4.2 LUBRICATION ON HEADSTOCK (18L)

The running gears and bearings are lubricated by a mechanical type drive pump. The pump will work automatically while the power is on.

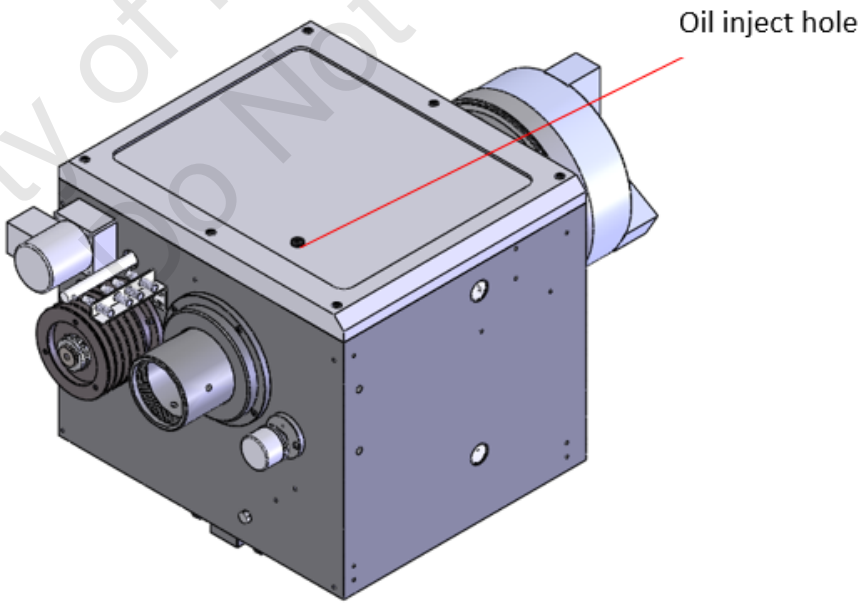

4.3 LUBRICATION ON CARRIAGE

These oil tubes offer the lubricatuion to Ball Screw, Bed Way,and Cross Slide by the auto-lubrication system.

When the oil is too less in the auto-lubricating system,the alarm shown on the right Above corner of the screen

Therefore,you'll need to add enough lubricationg oil to make the machine works.

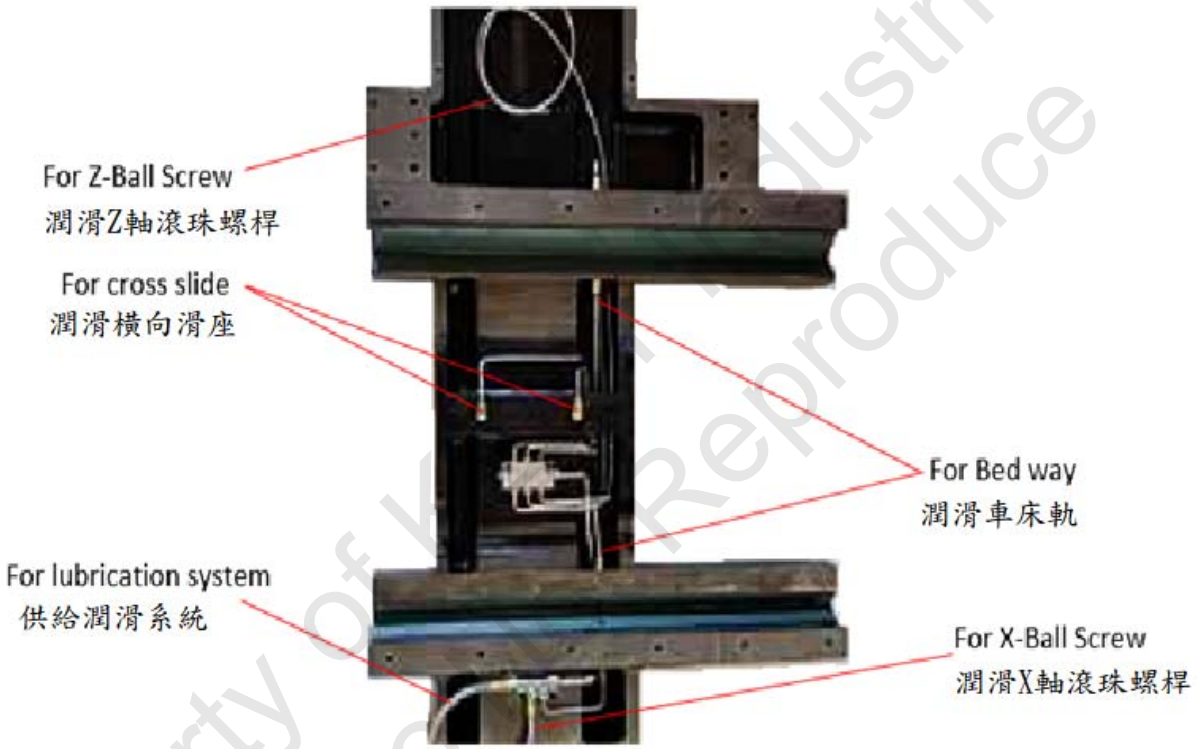

4.4 LUBRICATION ON TAILSTOCK

There are two oil inlet balls on the tailstock. Please fill the recommended lubricant to the oil inlet balls respectively every day before operating to ensure the smoothness of way.

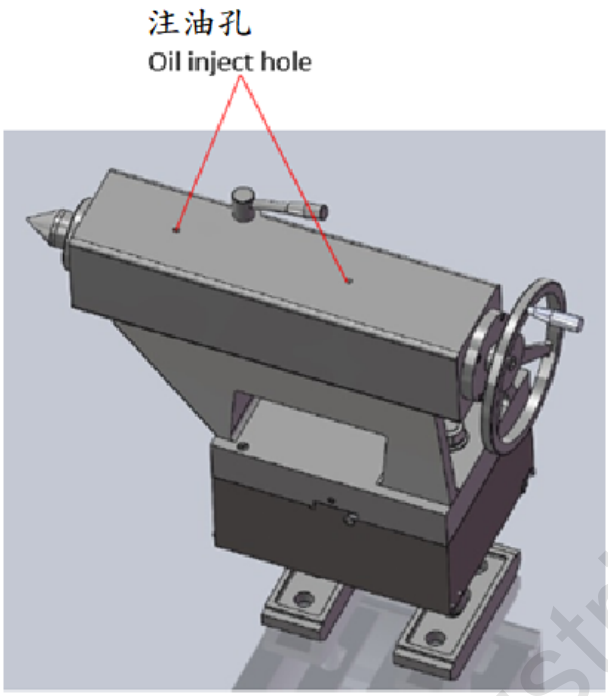

4.5 LUBRICATING SYSTEM (2L) CHECKING

Check all the fittings of lubricating system under normal operation temperature. If oil leakage is found, tighten the fittings. Check the lubricant level daily.

Lubricating System

4.6 REPLACING LUBRICANT IN HEADSTOCK

We recommend completely changing the lubricant in the headstock after the first month of operation and then, change the lubricant every 1500~2000 operation hours.

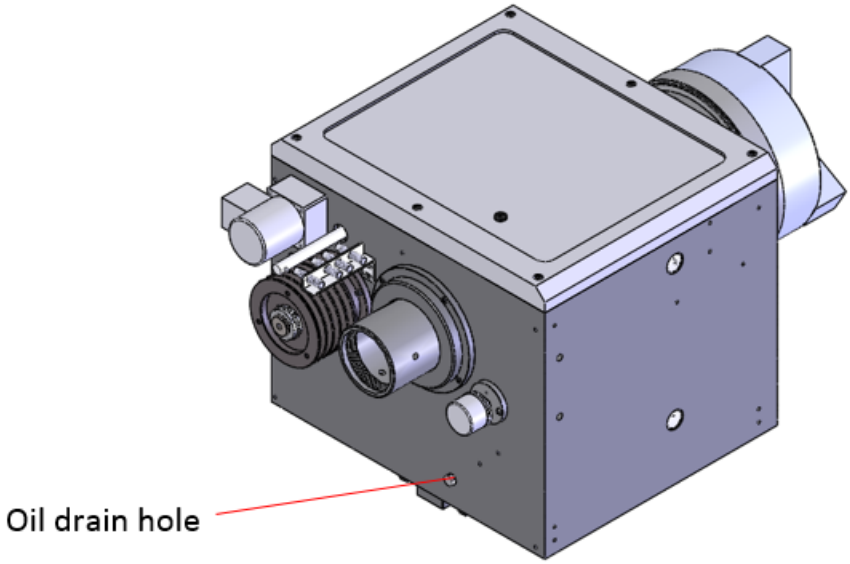

排油孔

5. ALIGNMENT OF THE MACHINE

In order to maximize the machine performance, readjust the accuracy on headstock and all slide ways after the first three months of operation. After that, readjust every 6-12 months to keep the machine in the best condition.

5.1 ALIGNING HEADSTOCK

If taper appears on turning work piece, adjust the parallel of headstock according to the following instructions.

1) Insert an approved testing bar into the spindle bore and put a dial indicator onto the compound slide. Move the saddle along Z-axis and measure the difference.

2) If the difference is out of accuracy, you can loosen two fixing screws and adjust the accuracy by two adjusting screws. Both fixing screws and adjusting screws locate at the rear of headstock.

3) After well adjusting, tighten two fixing screws firmly and check the difference again.

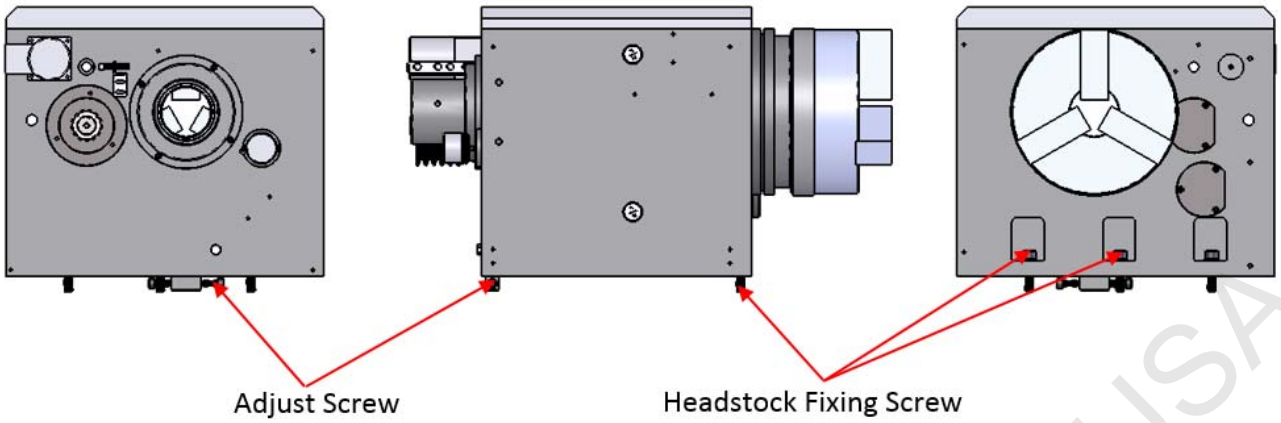

調整螺絲　　頭座固定螺絲

5.2 CROSS SLIDE

If the gib between slide and saddle becomes loose, it will affect the machine accuracy. We suggest regularly checking and adjusting the gib every six months as following instructions:

1) Release the adjusting screw (2) about 1/2 turn counter clockwise.

2) Tighten the fixing screw (1) about 1/2 turn clockwise.

3) Move the slide back and forth to a satisfied smoothness.

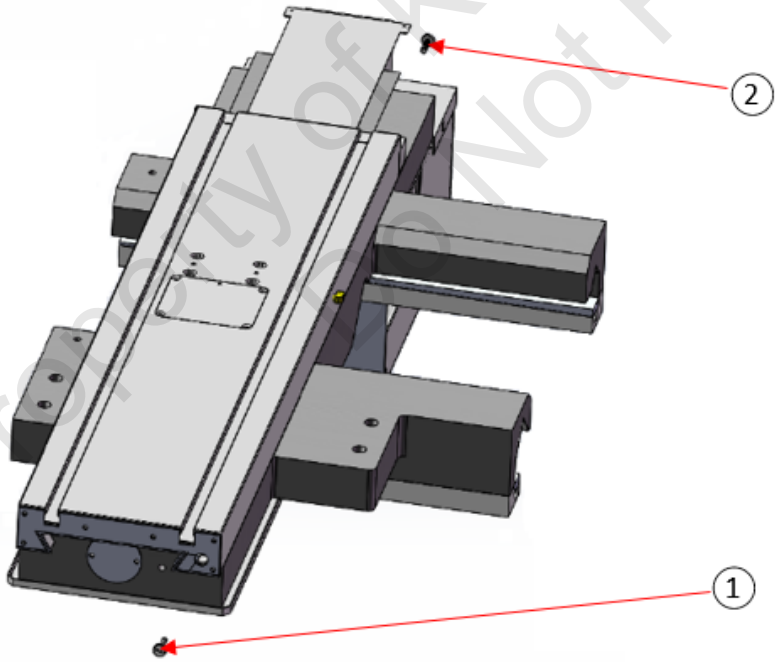

5.3 CARRIAGE

If the gibs between saddle and bed become loose, they will affect the accuracy of saddle travel. We suggest regularly checking and adjusting the gibs every six months as following instructions:

1) Loosen the adjusting screws (1 & 2) about 1/2 turn counter clockwise.

2) Tighten the fixing screws (3 & 4) about 1/2 turn clockwise.

3) Move the saddle left and right to a satisfied smoothness.

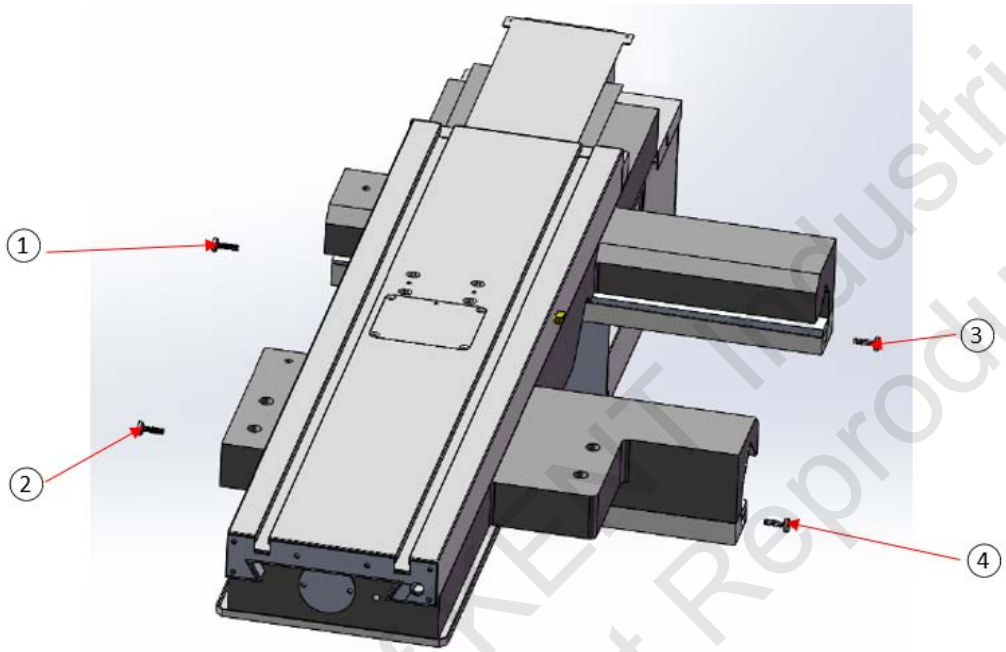

5.4 ADJUSTING BELT TENSION

The new belt tension between motor and spindle should be 13.5mm elastic distance when pressed by 5.1kg at the center between motor and spindle. Check the belt tension regularly and adjust it according to the following steps if the belt tension is too loose.

1) Loosen the screw (1).
2) Tighten the screw (2) on the motor base till the good belt tension is obtained.

3) Re-tighten the screw (1).

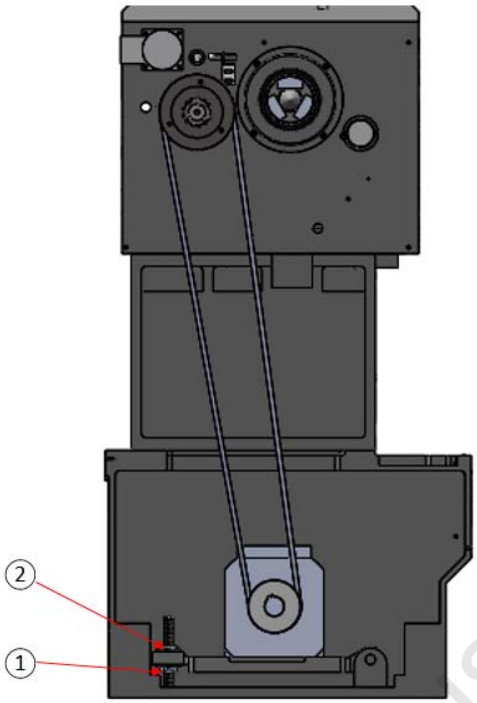

5.5 ADJUSTING X-AXIS BELT TENSION

The new belt tension between servo motor and ball screw should be 2.9mm elastic distance when it's pressed by 0.9kg at the center between servo motor and ball screw. Check the belt tension regularly and adjust it as following steps if the belt tension is too loose.

1) Loosen the screw (1)*4 pieces.
2) Adjust the motor base till the good belt tension is obtained.

3) Re-tighten the screw (1)*4 pieces.

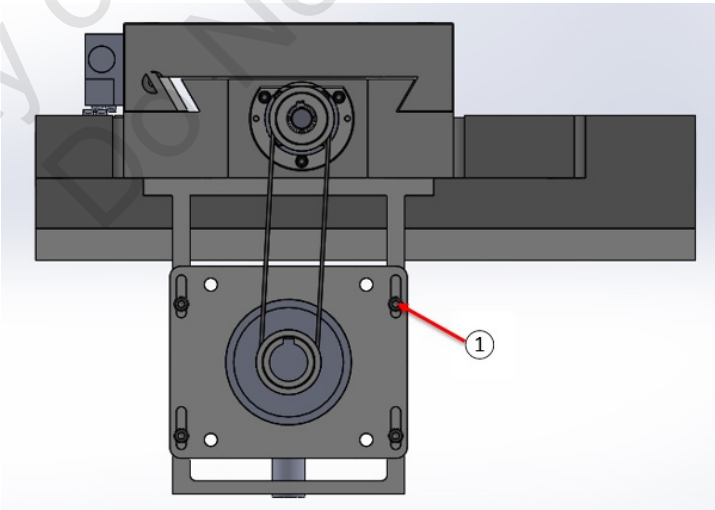

6. ELECTRIC EQUIPMENT

For safety consideration, all the electric works should be done by qualified engineers.

6.1 MOTOR

Please check the spindle motor every six months by a qualified technician and check the other motors annually.

6.2 CHECKING LIST BEFORE OPERATION

1) Check the power source and the power for the machine match up properly. If the power source is over 480VAC, one 30HP or 40HP transformer is requested to reduce the voltage to 220VAC. Input the right voltage then check if output is exactly same as the required voltage. Connect the wires to the machine if the output voltage is correct.

2) Before turning on the power, check again if everything is completely prepared and properly fixed in the right positions.

3) Press down the emergency stop button before turning on the power. If everything is ready, you can release the emergency stop button to start operation.

4) When turn on the power, press the RESET key to check if the rotating directions of spindle and coolant pump are correct.

5) Check if the automatic lubrication system is working well.

6) Before turning the power on, please check again:
   a. Check if there is any external damage on cord, CNC panel as well as screen.

   b. Fill up the lubricant into lubrication tank.
   c. Check if all wires are properly connected.
7) After the power is on, please check again:
   a. Make sure the rotation directions of spindle and coolant pump are correct.

   b. Check if the automatic lubrication is working properly.

   c. Check if the machine lamp is working well.

   d. Check if the servo motors of 2 axes are working properly.

8) Voltage/ Electric current required:

380VAC/110A

9) Power rate:

a. Main motor: 15KW

b. Coolant pump: 0.45KW

c. Automatic lubrication system: 22W

d. Machine lamp: 20Wx2

e. X & Z axes servo motor: X axis- 1.5KW / Z axis-2.5KW

f. Controller: 300W

7. OPERATION

Please refer to **FANUC 0i-TF operation and Commissioning manual**,

Additional switch and buttons are as following:

7.1 Mode selection:

Mode 1: automatic mode

a) When Mode 1 (automatic mode) is selected and the movable guards are open, no movement of machine elements shall be possible, except the following:

1) Spindle(s) rotation shall be controlled by hold-to-run control with JOG ENABLE and shall not exceed 50 rpm ;

2) Cutting fluid/coolant flow shall be automatically shut off when the movable guard for access to the work zone is open.

2. When Mode 1 (automatic mode) is selected and the movable guards are closed, all programmed movements of machine elements are possible.

Mode 2: Setting mode

For Mode 2: setting mode for machining center when the setting mode of operation is selected and the movable guards are open, movement of machine elements shall only be possible under the following conditions.

3. Axes feed movements shall be limited to a feed rate not exceeding 2 m/min. The axes feed movement shall be

1) Controlled by a hold-to-run control/electronic hand wheel with JOG ENABLE button.

4. Cutting fluid/coolant flow shall be automatically shut off when the movable guard for access to the work zone is open.

7.2 JOG ENABLE:

When the movable guard is opened, To use JOG ENABLE button to ensure the axes feed movement and spindle rotation are enabled.

7.2 MACHINE READY:

Use the Machine ready button to reset the machine after an abnormal situation is solved or power on.

8. MAINTENANCE

8.1 Maintenance of visual Windows

- The resistance class of visual window is as least C1 of EN ISO 23125 or polycarbonate is 8 mm.

- Replacement: when the damages happen to the visual windows.
- The procedure of replacing the windows:

Step 1: Loosen the screws.

Step 2: Unload the windows.

Step 3: Replace the new windows.

Step 4: Tighten the screws to fix the windows on the machine.

8.2 Daily Maintenance

1. Check if the lubrication oil filled with sufficient oil.
2. Check if the tank of the lubrication oil filled with sufficient oil
4. Check if the coolant volume is sufficient and if the coolant is contaminated.

8.3 Weekly Maintenance

1. Clean the chip around the protection cover of spindle
2. Clean filter net for oil cooler
3. Clean dust-proof net for heat exchanger or air condition
4.Clean the inlet of coolant pump

8.4 Monthly Maintenance

1. Clean lubrication pump
2. Clean filter net for lubricant oil.
3. Clean the drains of the bed

8.5 Yearly Maintenance

1. Check if every controlling switch on operating panel is sensitive.

2. Clean coolant tank and replace equivalent coolant
3. Leveling the machine every year and maintain machine's accuracy.
4. Replace filter net of lubricant
5. Replace the battery of electrical cabinet

8.6 Troubleshooting

Please refer to **Fanuc 0i-TF(Plus) Diagnostics Manual**

8.7 Parameter setting

Please refer to **Fanuc 0i-TF(Plus) Parameter Manual**

8.8 PARTS LIST

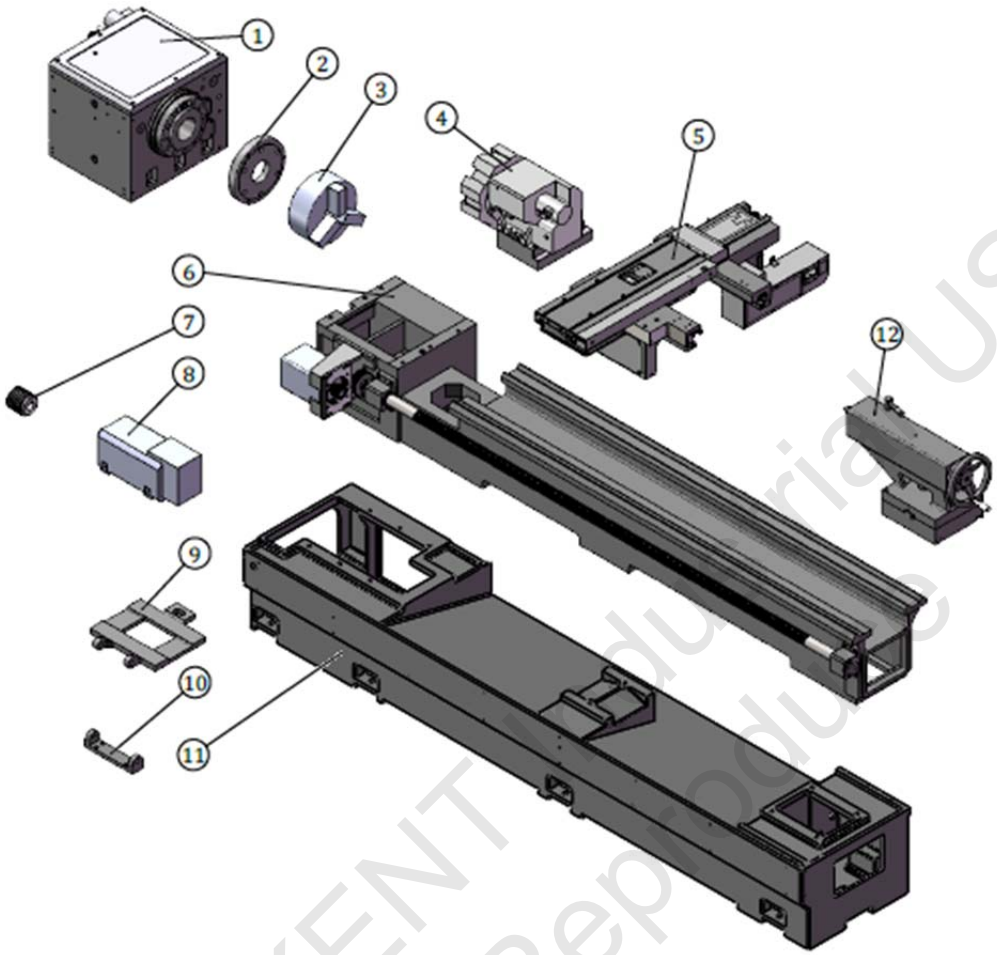

NO.	FILE NAME	PART NAME	SPECIFICATION	MATERIAL	Q' TY	MEARKS
1	MN-2000	Head stock			1	
2	MN-2150	Back plate	12"		1	
3		3-Jaw Chuck	12"		1	
4		Turret			1	
5	MN-6000	Carriage & Slide set			1	
6	MN-1018(120)	Lathe bed set		FC30	1	
7	MN-1030	Pulley		FC25	1	
8		Main motor	15 HP		1	
9	MN-1031	Motor seat		FC25	1	
10	MN-1031a	Motor adjustment plate		FC25	1	
11	MN-1010(120)	Base seat		FC25	1	
12	MN-7000(105)	Tailstock set			1	

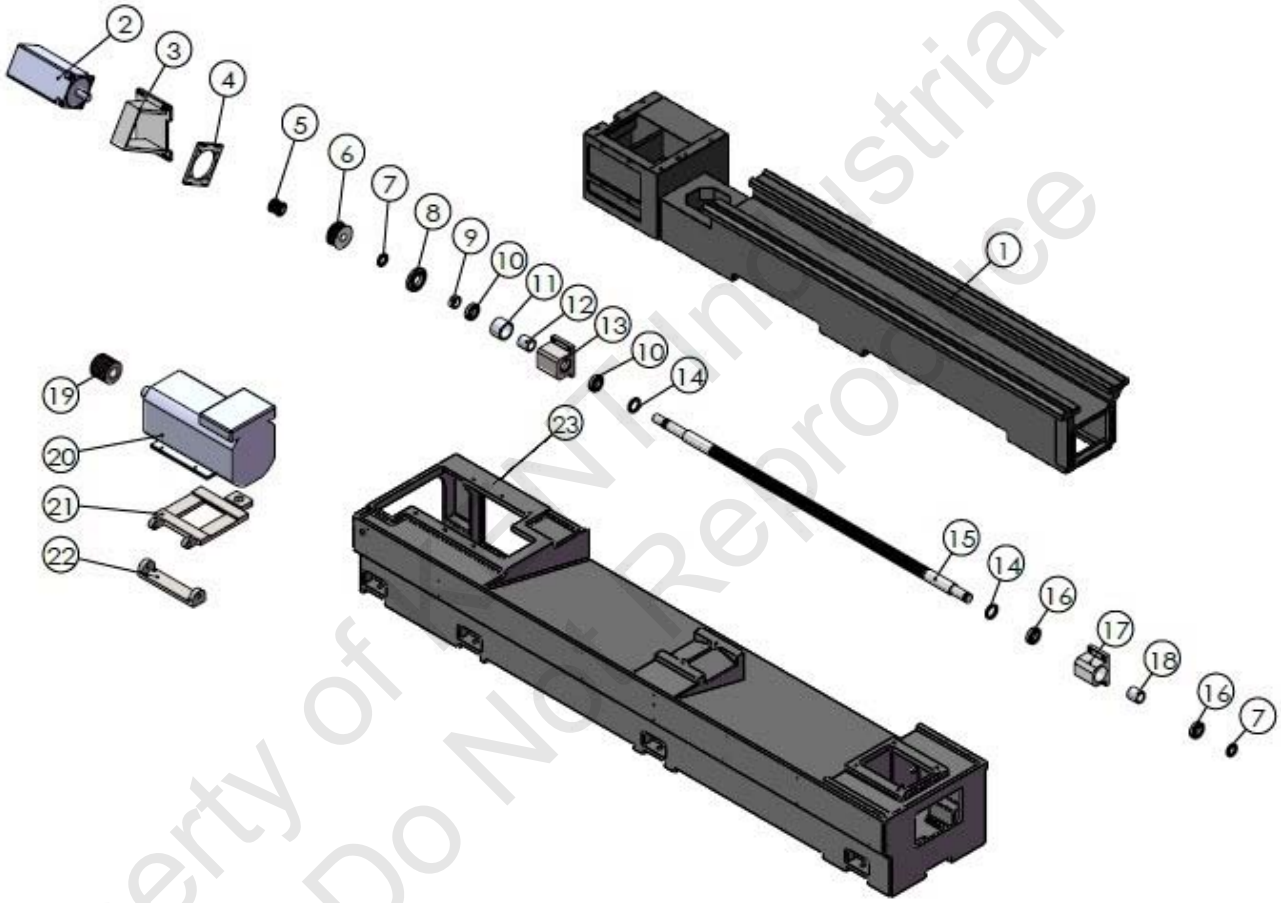

NO.	FILE NAME	PART NAME	SPECIFICATION	MATERIAL	Q'TY	MARKS
1	MN-1018(120)	Lathe bed		FC25	1	
2		Z Axis Motor			1	
3	MN-1035	Motor Plate		S20C	1	
4	MN-1034	Fixed Seat		S20C	1	
5	MN-1033	Pulley		S45C	1	
6	MN-1032	Pulley		S45C	1	
7	MN-1025	Nut		S45C	2	
8	MN-1027	Cover		S45C	1	
9	MN-1026	Spacer		S20C	1	
10	35TAC	Ball Bearings	35TAC		2	
11	MN-1024	Spacer		S20C	1	
12	MN-1023	Spacer		S20C	1	
13	MN-1022	Fixed Seat		FC25	1	
14		Oil Seal	357208		2	
15	MN-1021(120)	Ball Screw		4150H	1	
16		Ball Bearings	6206		2	
17	N-1022S	Fixed Seat		FC25	1	
18	MN-1026A	Spacer		S20C	1	
19	MN-1030	Pulley		FC25	1	
20		Motor	15HP		1	
21	MN-1031	Motor Plate		FC25	1	
22	MN-1031a	Adjustment Plate		FC25	1	
23	MN-1010(120)	Base Seat		FC25	1	

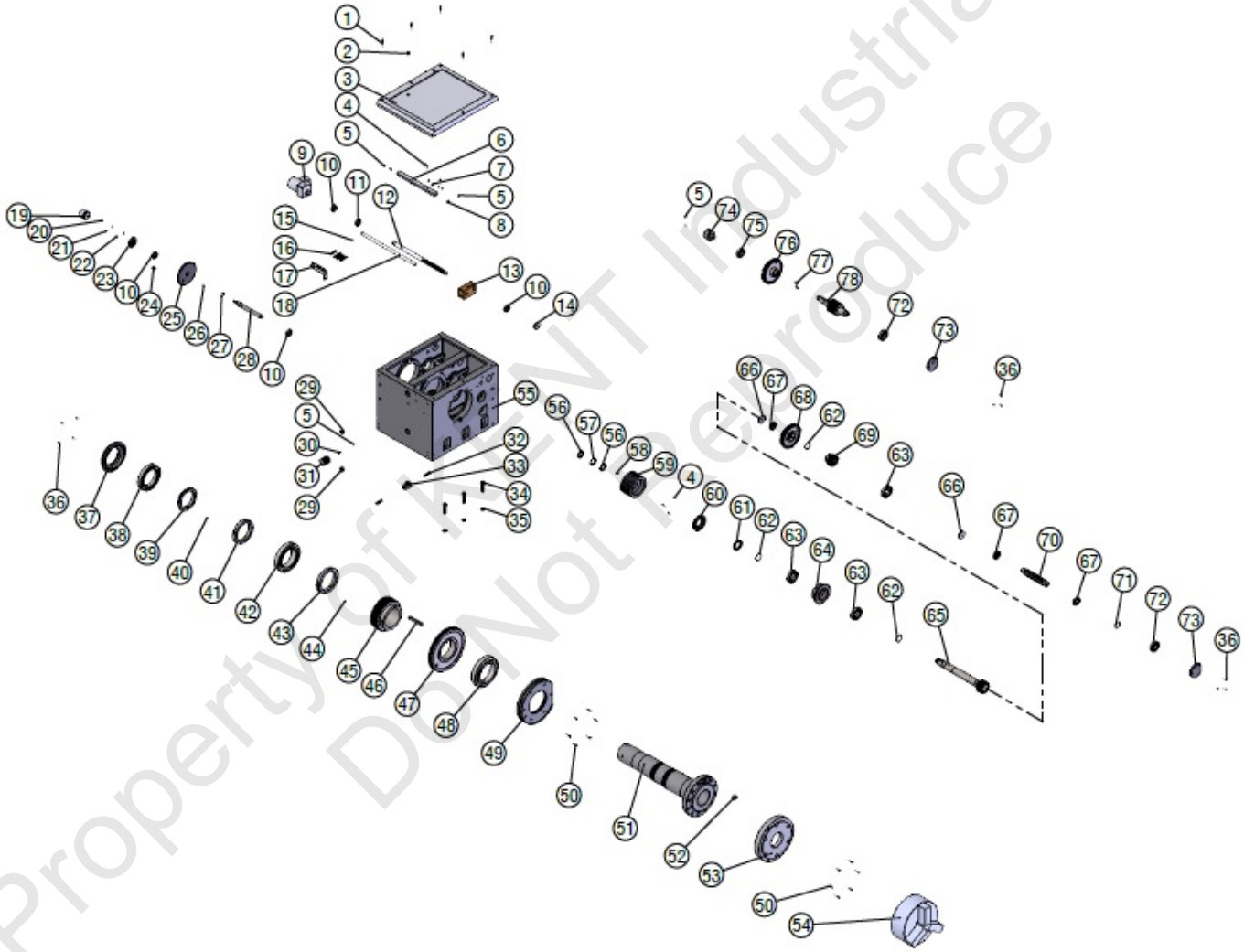

HEADSTOCK

NO.	FILE NAME	PART NAME	SPECIFICATION	MATERIAL	Q'TY	MARKS
1		Socket head cap screws	M8*50 B	SCM4	6	
2		Oil plug	3/4"	Plastic	1	
3	MN-2127	Cover		AL	1	
4		Socket head cap screws	M6*30 B	SCM4	5	
5	PA-4	Connect	M8	CU	10	
6		Oil separator		AL	1	
7	PD-401	Connect	PT1/8"	CU	2	
8	PH-401	Connect	PT 1/8"	CU	1	
9		Motor	25W		1	
10		Ball Bearings	6204	SUJ	4	
11		Ball Bearings	6005	SUJ	1	
12	MN-2092N	Screw		S45C	1	
13	MN-2109	Nut		BRASS	1	
14	N-2114	Plug		S45C	1	
15		Hex socket headless screws	M6*25	SCM4	1	
16		Sensor			4	
17	N-2129N	Sensor switch seat		SS41	1	
18	MN-2110	Shaft		S45C	1	
19	ENCODER	Encoder			1	
20				S45C	1	
21		Socket button head screws	M6*20 B	SCM4	2	
22		Washer	M6 B	S20C	2	
23	N-2014	Bearing cap		S45C	1	
24		Oil plug	3/8"	S20C	1	
25	N-2016	Gear	62T	Plastic	1	
26		Key	5x5x20A	S20C	1	
27		Snap Ring	S26	SUP	1	
28	MN-2013	Shaft		S45C	1	
29		Oil level sight glass	29MM	Plastic	2	
30	PD-402	Connect	PT 1/4"	CU	1	
31		Oil filter	MF-02		1	
32		Socket head cap screws	M12*40 B	SCM4	2	
33	N-2020	Adjustment seat		FC25	1	
34		Socket head cap screws	M16*60 B	SCM4	3	
35		Washer	M16 B	S20C	3	

36		Socket head cap screws	M6*20 B	SCM4	10	
37	N4-2034	Cover		FC25	1	
38		Ball Bearings	6024	SUJ	1	
39	N4-2065	Gear	62T	S45C	1	
40		Hex socket headless screws	M8*10	SCM4	3	
41	N4-2040	Lock nut		S45C	1	
42		Tapered roller bearings	32026	SUJ	1	
43	N4-2060	Lock nut		S45C	1	
44		Hex socket headless screws	M8*12	SCM4	3	
45	N4-2066	Gear	70T	SCM21	1	
46		Key	18x15x125A	S20C	1	
47	N4-2068	Gear	101T	SCM21	1	
48		Tapered roller bearings	32028	SUJ	1	
49	N4-2080(A11)	Cover		FC25	1	
50		Socket head cap screws	M6*40 B	SCM4	12	
51	MN-2070(A11)	Spindle	A11	S45C	1	
52	N6-2169	Drive ring		S45C	1	
53	N4-2150(12)	Chuck back plate		S20C	1	
54		Chuck	12”	FC25	1	
55	MN-2093(30)	Headstock		FC30	1	
56	AN M35 x P1.5	Nut	AN 07 (M35)	SCM4	2	
57	AW35	Washer	AW 07	SUP	1	
58		Key	8x7x30A	S20C	1	
59	N-2002	Pulley		FC25	1	
60	N-2008	Cover		FC25	1	
61		Oil seal	TC 45x72x10	Rubber	1	
62		Snap Ring	S45	SUP	3	
63		Ball Bearings	6209	SUJ	3	
64	N-2007	Cover		FC25	1	
65	MN-2004	Gear Shaft	25T	SCM21	1	
66	N-2004A	Washer		S20C	2	
67		Ball Bearings	6006	SUJ	3	
68	N-2087	Gear		SCM21	1	
69	N-2086	Gear	23T	SCM21	1	
70	N-2033	Shaft	36*42	SCM21	1	
71		Snap Ring	S42	SUP	1	
72		Ball Bearings	6207	SUJ	2	
73	N-2038	Cover		FC25	2	
74		Pump	IRA-2FS		1	

75		Ball Bearings	6206	SUJ	1	
76	N-2005	Gear	55T	SCM21	1	
77		Key	8x8x35A	S20C	2	
78	N-2006	Gear Shaft	26T	SCM21	1	

CARRIAGE

NO.	PART NO.	PARTS NAME	DESCRIPTION	MATERIAL	Q'TY	MARKS
1		Socket button head cap screws	M6 x 10	SCM4	37	
2		Socket button head cap screws	M6 x 16	SCM4	10	
3	MN-6041	Protection cap		SS41	1	
4	MN-6041-1	Plate		SS41	1	
5	MN-6037A	Plate		SS41	1	
6		Socket head cap screws	M6 x 30	SCM4	4	
7	MN-6039B	Plate		SS41	1	
8	MN-6038	Scraper		Rubber	1	
9	LS-160A	Knife base			1	
10		Socket head cap screws	M10 x 45	SCM4	4	
11	MN-6007	Turret pad		FC25	1	
12	MN-6037	Main skateboard		FC25	1	
13	N-6012	Fixed screw	M8	S45C	6	
14	MN-6038-1	Scraper		Rubber	1	
15	MN-6039A	Plate		SS41	1	
16		Snap ring	S20	SCM4	1	
17		Ball Bearings	6204	SUJ2	1	
18	MN-6055	bolt		S45C	1	
19		Socket head cap screws	M8 x 80	SCM4	4	
20	MN-6037-2	Plate		SS41	1	
21	MN-6037-1	Plate		SS41	1	
22	MN-6037-3	Plate		SS41	1	
23	MN-6060	Plate		SS41	4	
24	MN-6060A	Scraper		Rubber	2	
25	MN-6063V	Main slide		FC25	1	
26	MN-6063-1	Plate		SS41	2	
27	MN-6065	Plate		SS41	1	
28	MN-5064	Plate		SS41	1	
29	MN-5061	Care bed		FC25	1	
30	N-5063	Plate		SS41	2	

31		Socket head cap screws	M8 x 30	SCM4	12	
32	MN-6066B	Fixed seat		FC25	1	
33	MN-6066A	Fixed seat		FC25	1	
34	MN-6060B	Scraper		Rubber	2	
35	MN-6035	Plate		SS41	1	
36	MN-6035-2	Iron tube		SS41	1	
37		Socket head cap screws	M8 x 30	SCM4	4	
38	N-6047	X-axis motor seat		FC25	1	
39	MN-6048	Protection cap		SS41	1	
40	MN-6049	Protection cap		SS41	1	
41	MN-6057	Fixed seat		FC25	1	
42	MN-6055-1	Nut		S45C	1	
43		Socket head cap screws	M6 x 16	SCM4	4	
44	MN-6042	X-axis block Two-point style		S20C	1	
45	N-6056A	X-axis block		S20C	1	
46		Angular contact ball bearings	7204	SUJ2	2	
47		90° Tubing	1/8"PT	S45C	1	
48	MN-6043	X-axis block Two-point style		S20C	1	
49	N-6058	Spacer		S45C	1	
50	N-6056B	Spacer		S45C	1	
51	MN-6040L	Plate		SS41	1	
52	N-6044	Bracket		FC25	1	
53		Socket head cap screws	M6 x 35	SCM4	3	
54	N-6052-1	Cover		S45C	1	
55		Socket head cap screws	M6 x 20	SCM4	4	
56		Key	5x5x25	S20C	1	
57	N-6054	Time Pulley		S45C	1	
58	N-6053	Nut		SCM4	1	

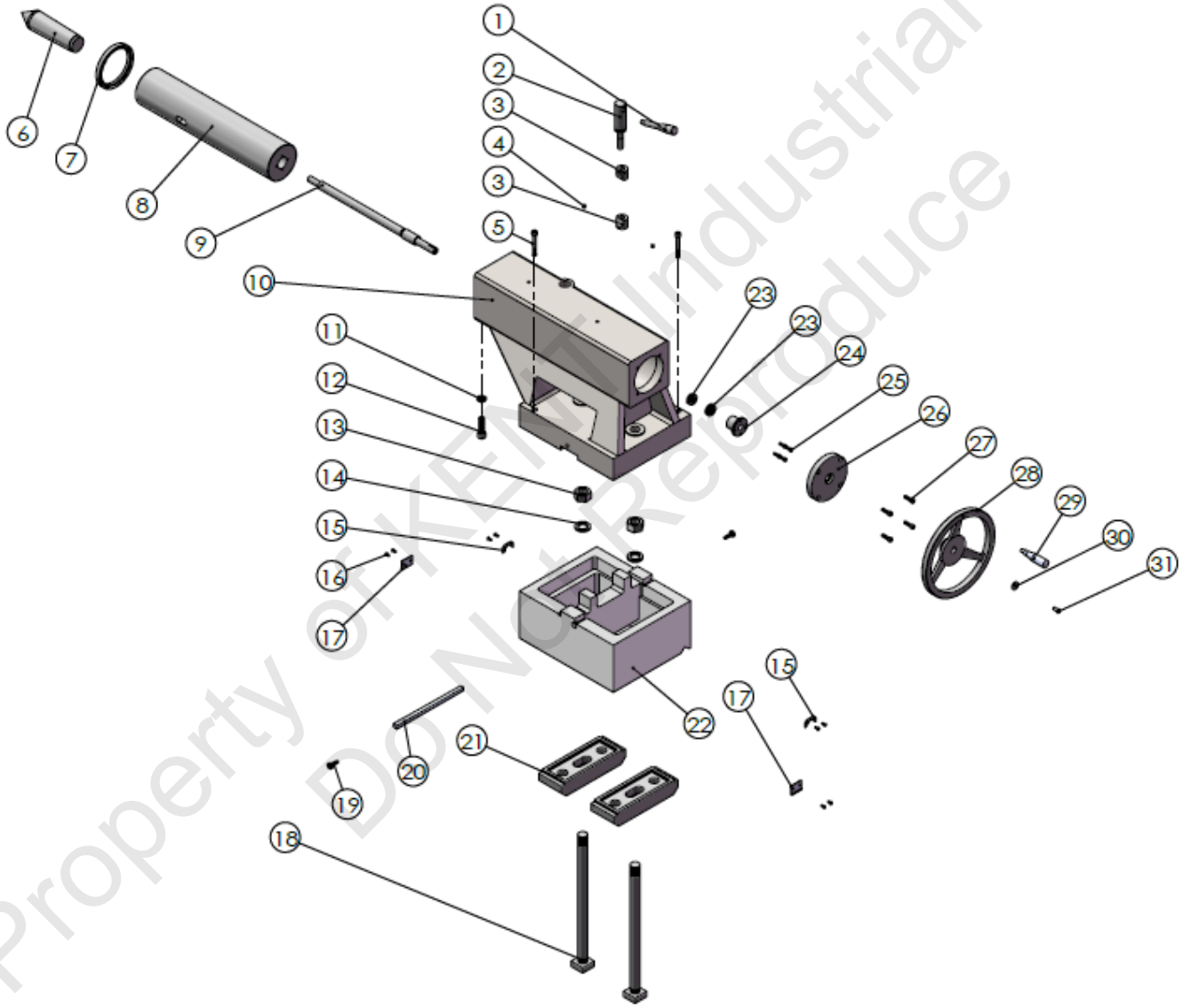

TAILSTOCK

NO.	FILE NAME	PART NAME	SPECIFICATION	MATERIAL	Q'TY	MARKS
1	MN-2120	Handle		S45C	1	
2	MN-7039	Handle shaft		S45C	1	
3	MN-7040	Fixed shaft		S45C	2	
4		Oil cup	8MM	BRASS	2	
5		Socket head cap screws	M10 x 80	SCM	2	
6		Dead center		S45C	1	
7		Oil seal	10513013		1	
8	MN-7015(105)	Sleeve		S45C	1	
9	MN-7014	Shaft		S45C	1	
10	MN-7001(105)	Tailstock		FC25	1	
11		Hexagon nut	M16-P2.0	SCM	1	
12		Socket head cap screws	M16 x 55	SCM	1	
13		Hexagon nut	M20	S45C	2	
14	MN-7027	Washer		S45C	2	
15	SN-6060	Plate		SS41	2	
16		Socket button head cap screws	M5 x 12	SCM	8	
17	MN-7033	Plate		SS41	2	
18	MN-7028B	Clamp screw		S45C	2	
19	N-6012	Adjust screw		S45C	2	
20	MN-7046	Gib		FC25	1	
21	MN-7029	Clamp block		FC25	2	
22	MN-7002(30)	Base Seat		FC25	1	
23		Trust ball bearings	51104		2	
24	MN-7013	Nut		BRASS	1	
25		Socket head cap screws	M 6 x 20	SCM	4	
26	MN-7009(105)	Cover		FC25	1	
27		Socket head cap screws	M 8 x 30		4	
28	MN-7003	Handle wheel		FC25	1	
29	C-5020	Handle		S45C	1	
30		Washer	M8	SS41	1	
31		Socket button head screws	M8 x 20	SCM	1	

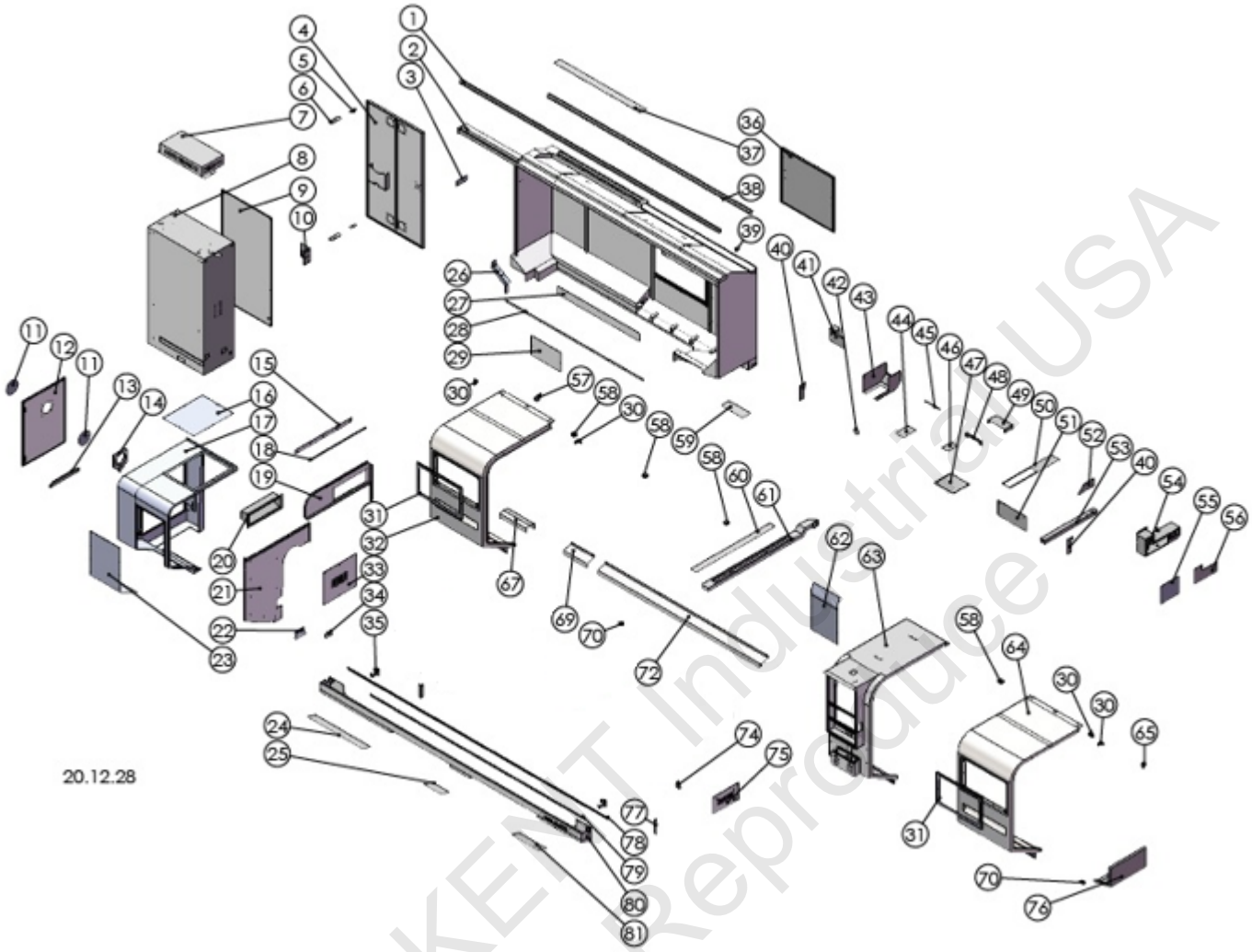

NO.	FILE NAME	Q'TY	MARKS
1	MN-1041-1(80)	1	
2	MN-1041(80)	1	
3	N-1057	1	
4	MN-1002	1	
5	N-1001-3	2	
6	N-1001-2	2	
7	N-1010	1	
8	MN-1001	1	
9	MN-1003	1	
10	MN-1001-1	1	
11	N-1008A	2	
12	MN-1007(24)	1	

13	MN-1006-4	1	
14	N-1008	1	
15	MN-1053-1	1	
16	MN-1006-3	1	
17	MN-1006	1	
18	MN-1053-2	1	
19	MN-1053	1	
20	N-1054	1	
21	MN-1005(24)	1	
22	MN-1005-3	1	
23	MN-1006-1	1	
24	MN-1019(80)-3	1	
25	MN-1019(80)-2	1	
26	MN-1041-7	1	
27	MN-1041-4(80)	1	
28	MN-1041S-6(80)	1	
29	MN-1014	1	
30	N-1051-3	4	
31	MN-1051-1	2	
32	MN-1051	1	
33	N-1012	1	
34	MN-1005-1	1	
35	N-1017A	2	
36	MN-1042	1	
37	MN-1041-5(80)	1	
38	MN-1041-2(80)	1	
39	N-1051-2	1	
40	N-5063	2	
41	MN-6048	1	
42	N-6071	1	
43	MN-6049N	1	
44	MN-6063A	1	
45	MN-6041-1	1	
46	MN-6037A	1	
47	MN-6065	1	
48	MN-6039B	1	
49	MN-6041	1	
50	MN-6040	1	
51	N-5064	1	

52	MN-6064N-2	1	
53	MN-6035	1	
54	MN-6064N	1	
55	MN-1018B	1	
56	MN-6064N-1	1	
57	N-1058L	1	
58		6	
59	MN-1041-8	1	
60	MN-1058S-1	1	
61	MN-1058	1	
62	MN-1050-1(FA)+2W	1	
63	MN-1050(FA)+2W	1	
64	MN-1052	1	
65	N-1051-1	1	
66	-	-	
67	MN-1020-1	1	
68	-	-	
69	MN-1020	1	
70		6	
71	-	-	
72	MN-1020(80)	1	
73	-	-	
74	-	-	
75	N-1013	1	
76	MN-1060	1	
77	N-1019-1	2	
78	MN-1017(80)	1	
79	MN-1017-1(80)	1	
80	MN-1019(80)	1	
81	MN-1019(80)-1	1	