WD-2028A

COLUMN TYPE SEMI-AUTO BAND SAW

Study Carefully Before Operating

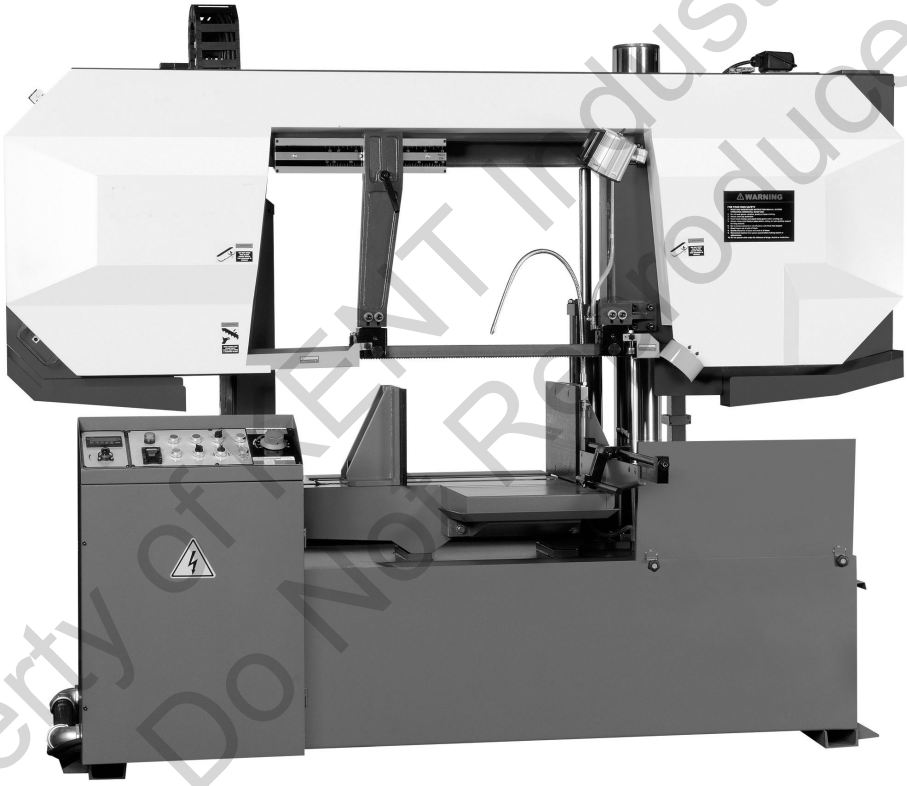

Specifications

Capacity

90°	510 mm	510 mm	510 x 720 mm

Blade Size
41 x 1.3 x 5840 mm

Blade Speed
30 ~ 85 mpm

Motor
7.5 HP

Packing Size (L x W x H)
2725 x 1110 x 2160 mm

Weight
N.W. 1760 kg / G.W. 1970kg

TABLE OF CONTENTS

1 ACCIDENT PREVENTION AND SAFETY REGULATION

This machine has been designed to comply with national and community accident- prevention regulations. Improper use and/or tampering with the safety devices will relieve the manufacturer of all responsibility.

1.1 Advice for the operator

- Check, the line voltage is the same as the voltage required by the machine's motor.
- Check the efficiency of your electric supply and grounding system; connect the power cable of the machine to the socket and the ground lead (yellow- green in color) to the grounding system.
- When the machine is in suspended mode (or stopped) the blade must not move.
- Only the blade section used for cutting must be kept unprotected. To remove guards to expose more of the cutting blade adjust the blade guides.
- It is forbidden to use the machine without its shields
- Always disconnect the machine from the power socket before blade change or carrying out any maintenance job, even in the case of abnormal machine operation.
- Always wear suitable eye protection.
- Never put your hands or arms into the cutting area while the machine is operating.
- Do not shift the machine while it is cutting.
- Do not wear loose clothing like: shirts with sleeves that are too long, gloves that are too big, bracelets, chains or any other object that could get caught in the machine during operation. Tie back long hair.
- Keep the area free of miscellaneous object; i.e. equipment, tools, etc…
- Perform only one operation at a time. Never have several objects in your hands at the same time. Keep your hands as clean as possible.
- All internal operations, maintenance or repairs, must be performed in a well-lit area or where there is sufficient light from extra sources to avoid the risk of accidents.

1.2 The electrical equipment according to European Standard" CENELEC EN 60204-1"

- The electrical equipment ensures protection against electric shock as a result of direct or indirect contact. The active parts of this equipment are housed in a box to which access is limited by screws that can only be removed with a special tool; the parts are fed with alternating current as low voltage (24V). The equipment is protected against splashes of water and dust.
- Protection of the system against short circuits is ensured by means of rapid fuses and grounding; in the event of a motor overload, protection is provided by a thermal probe.
- In the event of a power cut, the specific start-up button must be reset.
- The machine has been tested in conformity with point 20 of EN 60204

1.3 Warning labels

Replace warning labels if they become obscured or removed.

- Keep hands and other body parts away from a running blade.
- Do not open the blade cover while machine is running.
- Do not store combustible materials near or around machine.
- Always wear approved safety glasses/face shields while using this machine.
- Keep machine guards in place at all times.
- Do not wear gloves.
- Remove loose clothing and confine long hair.
- Keep the work area clean and free miscellaneous objects.

1.4 Emergencies according to European Standard "CENELEC EN 60204-1"

- In the event of incorrect operation or a danger condition, the machine may be stopped immediately by pressing the red mushroom shaped button.

NOTE: Resetting of machine operation after each emergency stop requires resetting the emergency stop button

2 MACHINE TRANSPORTATION AND INSTALLATION

2.1 Machine dimensions

2665 x 1050 x 2050 mm (L x W x H)

2.2 Transporting the machine

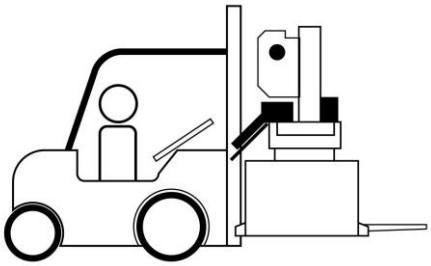

Use a forklift to set machine in position. Sufficient space should be left around the machine to allow safe handling of materials, inspection, and maintenance operations. Take precautions to choose a location that will keep the machine free of vibration and dust caused by other machinery.

2.3 Minimum requirements for housing the machine

- Main voltage and frequency must comply with the machine's motor requirements.

2.4 Securing to foundation

Position the machine on a flat and level foundation of reinforced concrete. Level machine and anchor it to the foundation with anchor bolts. Maintain a minimum distance of 800mm from the rear of the machine to the wall. Position the anchors using screws and expansion plugs or tie rods sunk in cement.

2.5 Leveling the machine

The operating accuracy of all precision machinery depends on the accuracy of the installation of the machine. Manufacturing tolerance of the machine can only be guaranteed if the machine is firmly and properly installed. Once the machine is lowered on the prepared foundation, machinist levels should be used alternately on the vise slide plates and work feed table, adjust the left to right and front to back level of the machine with leveling bolts.

- When leveling left to right level, adjust left side to be approximately 5mm higher than the level of the right side.
- When leveling front to back level, adjust rear side to be approximately 5mm higher than the level of the front side.

This will provide proper return of the cutting fluid. After proper leveling of the machine, use anchor bolts to secure to the foundation.
Caution: All leveling bolts should support the weight the machine evenly.

2.6 Securing the coolant tray in position

The coolant return tray equipped on right-front side of machine base is as picture.

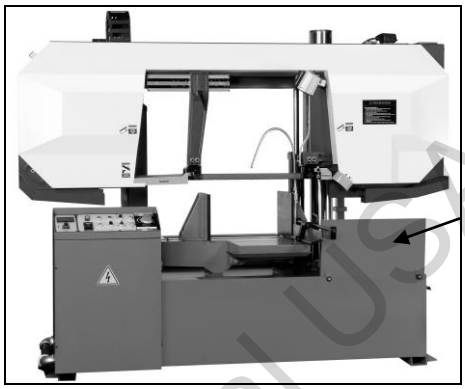

2.7 Deactivation of machine

If the machine is to be out of use for a long period, it is advisable to proceed as follows:
1) Disconnect from the power supply
2) Loosen the tension on the blade
3) Release the bow return spring
4) Empty the coolant tank
5) Carefully clean and grease the machine
6) If necessary, cover the machine.

Dismantling (due to deterioration and/or obsolescence)
As a General Rule,
If the machine is to be permanently demolished and/or scrapped, divide the material to be disposed of according to type and composition, as follows:

1) Cast iron or ferrous materials, composed of metal alone, are secondary raw materials, so they may be taken to an iron foundry for re-smelting after having removed the contents (classified in point 3).
2) Electrical components, including the cable and electronic material (magnetic cards, etc.), fall within the category of material classified as being assimilated to urban waste according to the laws of your local, state, or federal government, so they may be set aside for collection by the public waste disposal service;
3) Old mineral and synthetic and/or mixed oils, emulsified oils and greases are considered hazardous or special refuse, so they must be collected, transported and disposed of at a special waste disposal service.

NOTE: The standards and legislation concerning refuse is in a constant state of evolution, therefore is subject to changes. The user must keep informed of the regulations at the time of disposal as these may differ from those described above.

3 DESCRIPTION OF MACHINE PARTS

3.1 Control panel

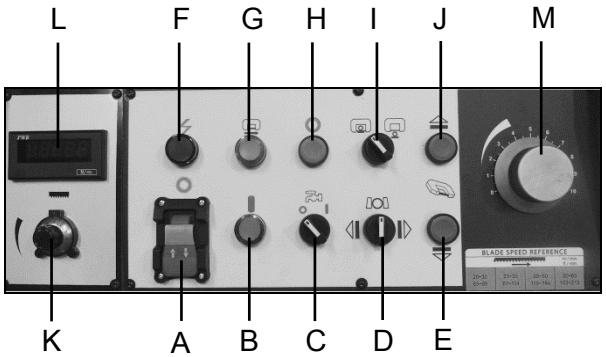

A. Power on switch, lock function switch and Emergency Stop Button

(1) Depress to immediately stop all machine function.

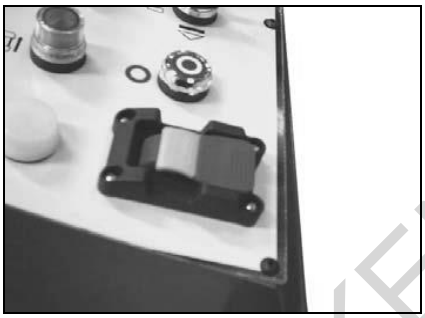

(2) Push up the switch to connect the control power system, and the power light will light on.

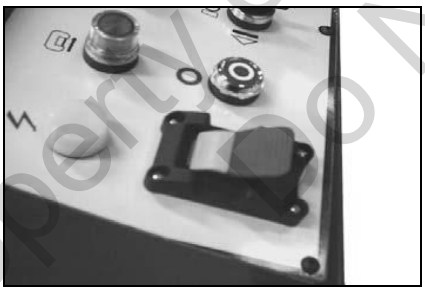

(3) Pull up an attached yellow part to lock the control system. Unless insert it again.

B. Hydraulic pump start switch – actives hydraulic unit to start machine function and green light will lit on.
C. Coolant start switch – switch to I to activate coolant pump, switch to O to stop coolant pump.
D. Vise action switch –switch to to tight up vise, switch to to open vise, to stop vise close or open, turn switch in the neutral position.
E. Bow down switch – press to lower the saw bow
F. Main power indicator green light – indicates that main power is active when (A) switch was lift up.
G. Start cutting button – press it and green light lit on to running blade and begin to lower the blade cutting. The saw lower speed according to the Down feed flow control valve (M) setting.
H. Stop switch – press to stop cutting cycle
I. Saw head stop location after cutting: switch to , the saw bow will stay under the work piece. If switch to , the saw bow will stay upper the work piece
J. Bow up switch – press to raise the saw bow
K. Blade speed knob- adjust blade speed rate of blade by the motor inverter.
L. Blade speed readout- indicate blade speed rate.
M. Cutting down feed rate – This knob adjusts the down feed rate of cutting of the saw bow.

3.2 The saw bow

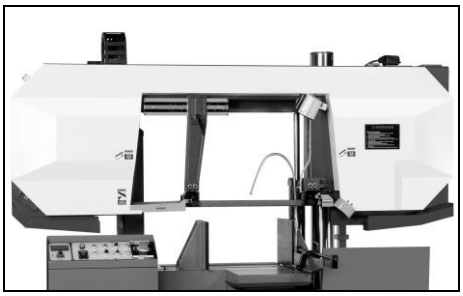

It is sawing mechanism with machine parts consisting of drive members (gears, variable speed, motor, and wheels), tensioning system, light, posts, brush, and guides (blade guards, blade guide blocks).

3.3 Work light

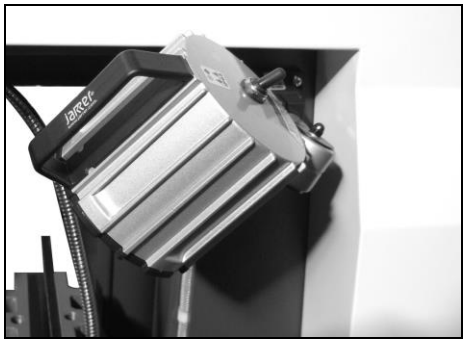

The work light is a light to illuminate work pieces. There is a toggle switch on the top side to turn on/off the work light.

3.4 Approach bar and sensor

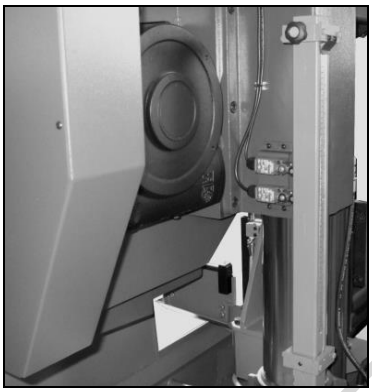

The limit switch -adjusting device stops the saw bow at the bow up or down height. It is activated when the limit switch is contacted by the adjusting stoppers. The stoppers are an adjustable stop that is attached to a vertical bar.

3.5 Blade broken limit switch

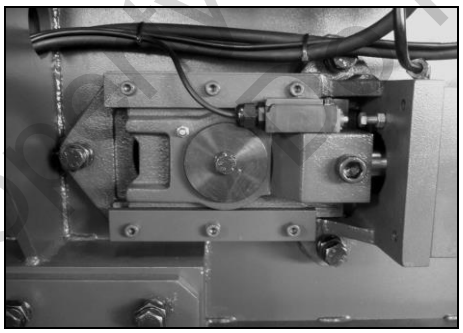

This machine is equipped safety limit switch to prevent continuing damage when a blade has been broken. The safety limit switch will automatically cut power off when there is a loss of tension. Loss of tension may be cause by extreme stretching or breakage of the blade. Loss of power may also occur if the limit switch does not actuate. An adjustment of the tighten bolts are required so that the limit switch's actuator be touched when blade be tensioning.

3.6 Cover safety micro switches and tension tighten / loosen action device

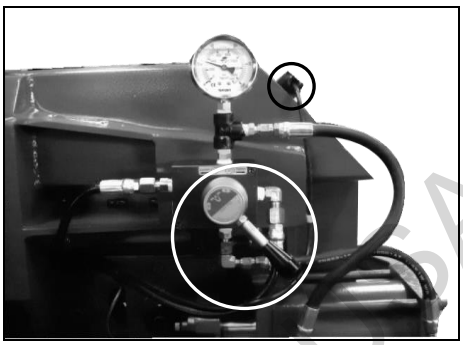

The wheel cover installed a safety micro switch that stop the machine running when the cover was opened.

Turn blade tension handle counter clockwise to loosen blade. Contrarily, turn handle clockwise to tighten blade tension for changing dull blade.

3.7 Chip brush

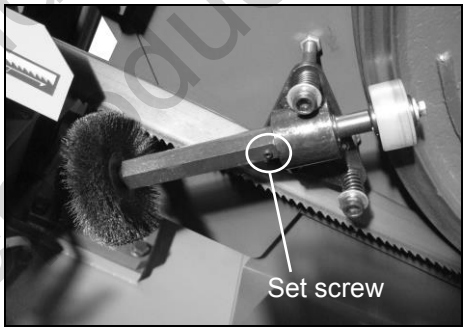

This model has a chip brush driven by a wheel motion directly. The chip brush is designed to clean cutting chips on the blade for prolonging the life of the blade. There is a set screw can be adjusted the brush to touch blade teeth's groove when wire brush worn out.

3.8 Chip cart

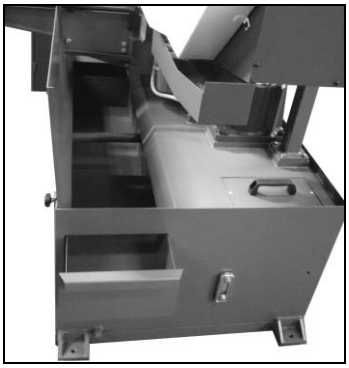

Removable chip tray is for collecting chips and debris.

- Auto chip conveyer is optional equipment.

3.9 Top clamping (optional)

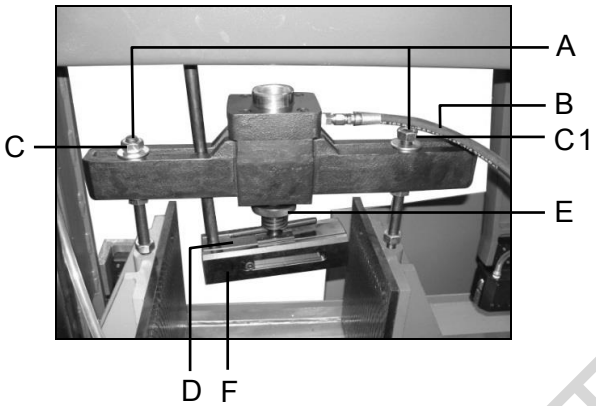

Adapted block

Standard press capacity (H x W) 90~300 x 200~420 mm.

- Open the vise more than 250mm.
- Attach and Tighten posts bolts' (A) on to vises. Then attach the vertical press to the top of the post bolts. Adjust support nuts to get top clamping to needful height.
- Attach the nuts (C) on to the posts, but do not make the nut (C1) on moveable vise jaw too tight. *Otherwise, the vise won't be able to clamp the work piece or the post bolts will be damaged.
- Adjust the vise press (D) to sit approximately 5-8mm above the work piece. Rotate the nut (E) to raise or lower the vise press (D).
- Adjust the vise press width to fit the work piece size. Loosen screws on both sides of the vise press then move press extender plates (F) desired width.
- Turn OFF the hydraulic pump.
- Connect the hydraulic hose (B) connector to the fit on the adapted block (B1)
- Switch ON the hydraulic pump.

3.10 Vise and attached blocks

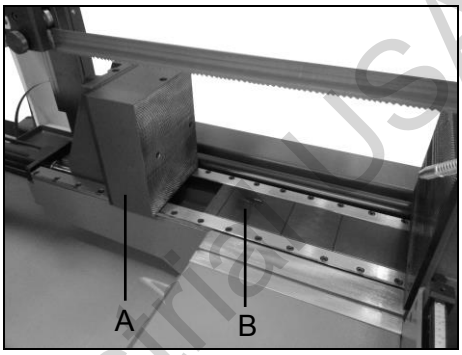

There is an add block (A) with moving vise, block A is for clamping small size material, if want to clamp wider work piece the block A can be removed out by removing two tighten screws.

There are five pieces attached blocks (B) which also can be moved out according to work piece width, the workpiece should be wider than the attached blocks, so workpiece can be clamping sturdy.

4 SET UP AND PRE-OPERATIONS

4.1 Adjusting the tungsten carbide guides

The blade is guided by the upper ball bearings, side ball bearings, and tungsten carbide guides.

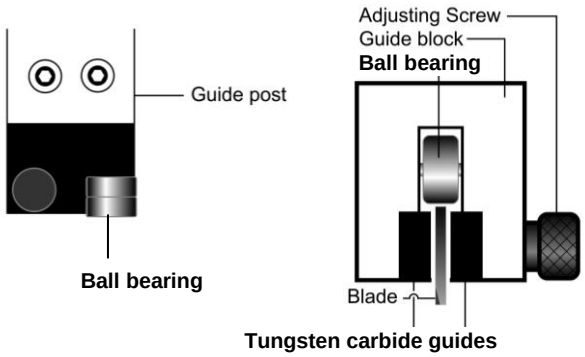

- When ready to cut the work piece, the carbide guide must be adjusted by adjusting the screws to properly compressed blade. The tungsten carbide blades should touch, but not pinch the blade.
- For moving the blade guide posts or changing blade, the tungsten carbide guides should be released by using the adjusting screw.
- In case the blade needs to be replaced, make sure to always install 1.3mm (0.052") thick blade.

4.2 Blade tracking adjustment

This adjustment must be accomplished by qualified personnel that are familiar with this type of adjustment and the dangers associated with it.

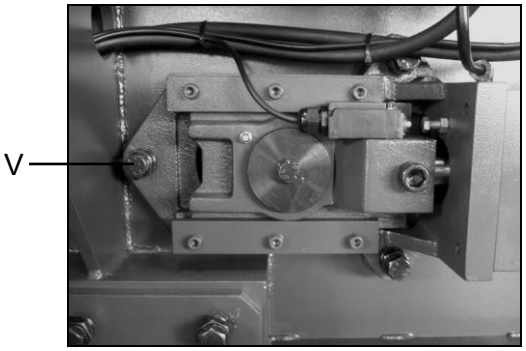

Blade tracking has been set at the factory and has no adjustment required. If a tracking problem occurs, adjust the machine as follows:

- Raise saw arm to the proper position.
- Open wheel cover to make sure the blade track need to adjust to which direction.
- Locate tracking adjustment screw set (V) on the back of the driven wheel.
- Reduce the blade tension a little by turning the tension handle to loosen direction a little.
- Loosen top tighten screw a little.
- Turn the tracking adjustment bigger screw below the top screw (V) either clock wise to far away blade back from wheel flange or counter clockwise to get back of blade to close to the wheel flange.
- Re-tension the blade tension.
- Cover blade wheel cover.
- Connect the machine power to run the blade for 30 secs. Then stop the machine operation.
- Open cover to check the blade tracking in correct position or not.
- If correct, close wheel cover, tighten the top screw to fasten.
- If necessary, readjust it again.

4.3 Change the saw blade

- Raise saw blade over the vise top height to the proper position to prepare change the blade.
- **Press down the power on switch to OFF the machine and hydraulic pump power.**

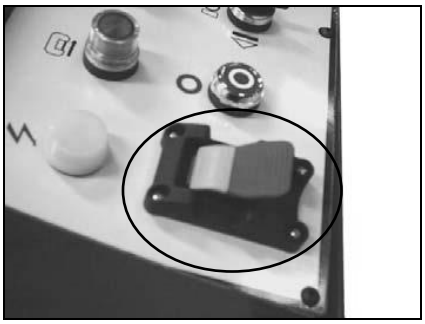

- Open wheel cover by removing two lock screws on the two sides of wheel cover.
- Open up the wheel cover and lock it with safety bracket (A).

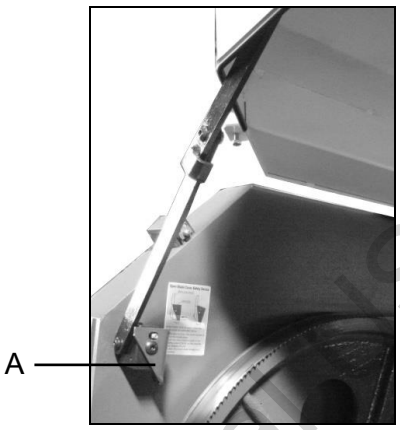

Caution: Even dull blades are sharp to the skin! Use extra caution handling band saw blades!

- Remove the right side and left side blade guards.

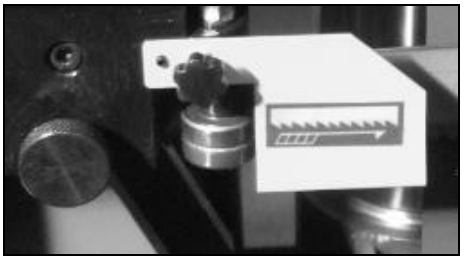

- Turning tighten knob counter clockwise to release the tungsten carbide guides.

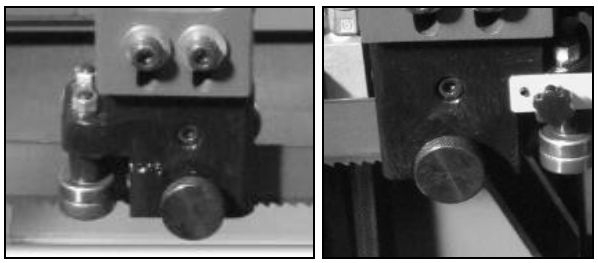

For safety reason after blade cover has been opened the blade running control system also been disconnected, the blade can't be running by manual operation or in auto-cutting cycle. Only can start hydraulic pump for release or tension the blade to replace blade.

For changing blade possibility, if blade broken at lower position under the vise height in auto-cutting cycle the machine power was disconnected, the hydraulic pump need to be starting again to lift saw head up to get blade location over the vise height.

- Repower on the hydraulic pump to release the blade tension.
- Release the blade tension with handling in counter clockwise way.

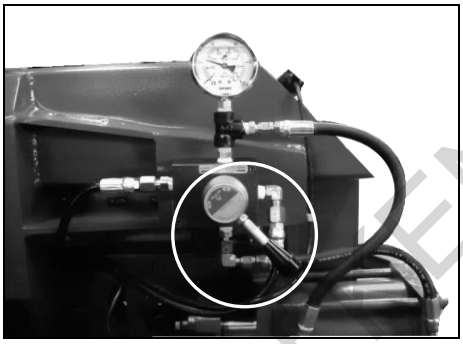

- **Disconnect the machine from the power source after loosen the blade tension.**
- Remove the blade from both wheels and blade guides

Caution: Even dull blades are sharp to the skin! Use extra caution handling band saw blades!

- Check the blade teeth in the proper direction. The teeth are pointed away from the machine and in the cutting direction.
- Place the blade on the wheels. Wrap the blade around the race of the drive and driven wheels. Make sure back of the blade rests lightly against the flange of the both wheels.
- Twist blade and slip it into blade guides.
- Connect machine to power, press on the hydraulic pump button.
- **Tension the blade by tension handle jogging and check blade on the wheel track or not.**
- Check and adjust the brush to touch the blade into the groove of blade teeth then tighten the set screws.
- Close all covers, replace all guards, and fasten securely.
- Running the blade freely for 10 secs.
- Turn the power OFF.
- Open the blade wheel cover.
- Recheck the blade track in right position or not.
- If no problem cover the wheel cover and retighten the wheel cover with two lock screws.

5 OPERATION PREPARATIONS

5.1 Setting the saw height limit

To set the bow up crossbar according to material height for saving cycle time.
The upper limit switch stops the saw bow at the expected height position. It is activated when the limit switch is contacted by the crossbar (B).

5.2 Adjusting the blade speed

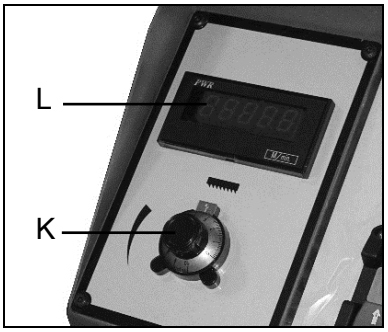

This machine equipped with motor inverter device allow for variable blade speed. Adjust the blade speed while the machine is running. Knob "K" controls blade speed rate. If the operator wants to increase speed, just turns clockwise direction. On contrary, turn anti-clockwise direction to slow blade speed accordingly. In addition, blade speed readout (button "L") will indicate real speed rate of blade. Using Blade speed knob and readout will make blade speed adjustment for different material cutting conditions easily.

5.3 Break in the saw blade

When a brand-new blade is adopted, be sure to break-in the blade before using it for any extended periods. Failure to break-in the blade will shorten the service life of the blade, and result in less than optimum efficiency. To break in the blade, proceed as follows:

- Reduce the blade speed setting to one half of its normal setting.
- Lengthen the time required for cutting to 2-3 times that of normal.
- The break-in operation can be considered sufficient if all unusual noises or metallic sounds have been eliminated. (For instance, to completely break-in the blade, a minimum of five complete cuts through a 200mm (8") Diameter work-piece is required).
- After the break-in operation has been completed, return the blade speed and feed rate to their normal setting.

6 OPERATION CYCLE

6.1 Operation cycle

- Turn on the main connect switch on the door of electrical box (CE type) or lift power on switch up.
- Start the hydraulic system.
- Set the saw bow's height. Adjusting bow height touching crossbar to set the most efficient height for the workpiece.
- Raise the saw bow. Press the bow up switch until the saw bow has risen to the set height.
- Open the vise. Press the vise open switch.
- Load the workpiece.
- Clamp the workpiece. Press the vise close button after line up the cutting line.
- Pre-set the blade speed.
- Pre-set the down feed flow control valve.
- Start the cutting operation. Press the start cutting button.
- The coolant will come out automatically.
- According cutting situation reset the blade speed and cutting down feed rate to perform nice cutting.

6.2 Emergency stop

-For unsafe and emergency conditions, use the Emergency stop button. Press Emergency down stop button will stop the machine in last position. The motor and hydraulic will stop and control setting will be reset.

-To restart the machine, lift up the Emergency switch to power on machine. The operation cycle must reset.

7 ROUTINE AND SPECIAL MAINTENANCE

The maintenance jobs are listed below, divided into daily, weekly, monthly and six-month intervals. If the following operations are neglected, the result will be premature wear of the machine and poor performance.

7.1 Daily maintenance

- Give general cleaning to the machine to remove accumulated shavings.
- Clean the lubricating coolant drain hole to avoid excess fluid.
- Top off the level of lubricating coolant.
- Check blade for wear.
- Raise the saw frame to the top position and partial slacken the blade to avoid useless yield stress.
- Check functionality of the shields and emergency stops.

7.2 Weekly maintenance

- Thoroughly clean the machine to remove shavings, especially from the coolant tank.
- Removal of pump from its housing, cleaning of the suction filter and suction zone.
- Clean the filter of the pump suction head and the suction area.
- Use compressed air to clean the blade guides (guide bearings and drain hole of the lubricating and cooling tank).
- Clean flywheel housings and the race of the flywheels.

7.3 Monthly maintenance

- Check the tightness of the drive wheel screws.
- Check that the blade guide bearings on the heads are in perfect running condition.
- Check the tightness of the screws for the motor, pump, and accident protection guards.

7.4 Six-monthly maintenance

- Test the continuity of the equipment potential protection circuit.

7.5 Oil for lubricating coolant

Considering the vast range of products on the market, the user can choose the one most suited to their own requirements, using as reference the type SHELL LUTEM OIL ECO. The minimum percentage of oil diluted in water is 20%~30%.

7.6 Oil disposal

The disposal of these products is controlled by strict regulations. Please see the Chapter on "Machine dimensions Transport - Installation" in the section on Dismantling.

7.7 Special maintenance

Special maintenance must be conducted by skilled personnel. We advise contacting your nearest dealer and/or importer. Other protective and safety equipment, devices (of the reducer), the motor, the motor pump, and other electrical components also require special maintenance.

7.8 Changing gear oil or hydraulic oil

The gearbox requires periodic changing of oil. The oil must be changed by the first 6 months of a new machine and every year thereafter.

To change the gear box oil

- Lower the saw bow. Press the bow down button
- Disconnect the machine from the power source.
- Open the gear reducer drain hole to draw off gear oil.
- Remove the fill hole screw.
- Replace the drain hole screw after oil completely flows off.
- Pour the gear oil into fill in hole, until the oil reaches the center of the oil gauge.
- Replace the fill hole screw.
- Use HD 150 gear oil
- Every year change Hydraulic Oil uses AW32 (ISO VG 32)

8 ELECTRICAL SCHEMATIC

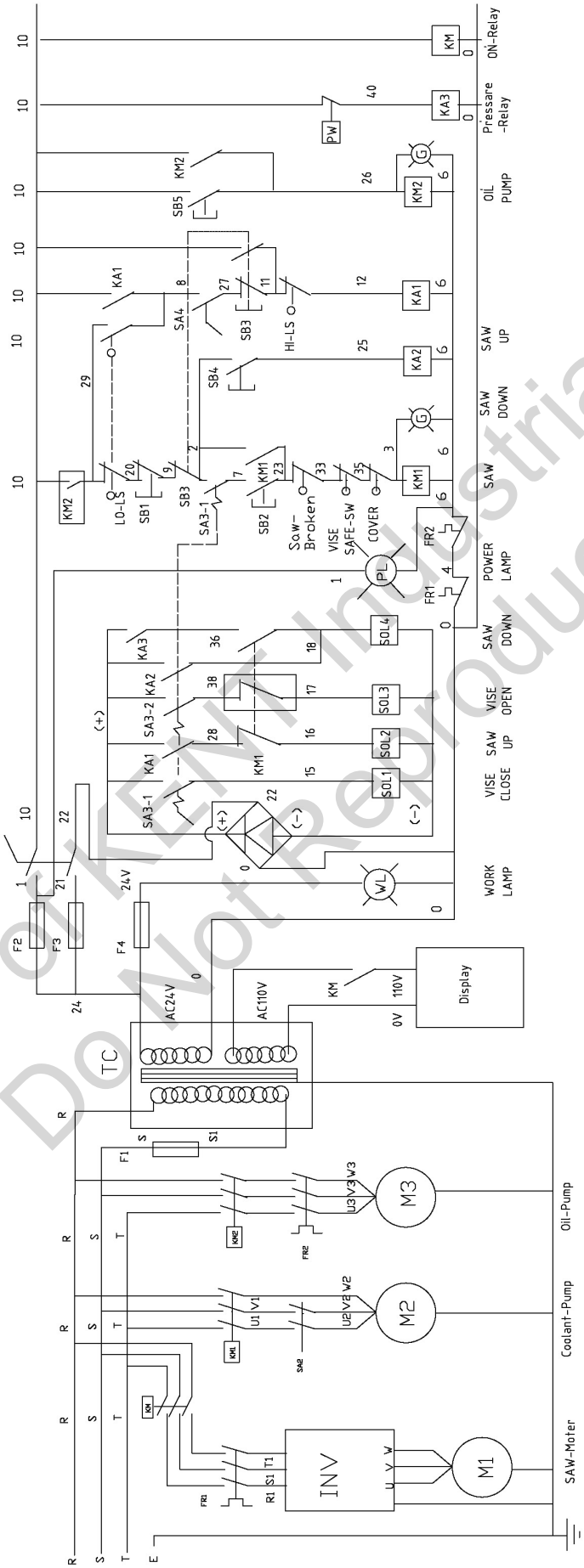

SECTION A - PARTS LIST

Part No.	Description	Size / Stock No.	Q'ty	Part No.	Description	Size / Stock No.	Q'ty
A1	Hex. Socket Cap Screw	3/8"x1"L	1	A48	Nut	M16	1
A2	Spring Washer	3/8"	1	A49	Steel Hex. Cap Bolt	M16x45L	4
A3	Washer	S1380221-3	1	A50	Spring Washer	M16	4
A4	Set Screw	5/16"x5/16"L	1	A51	Spring Washer	M12	4
A5	Length Rod Left Bracket	S1380110-A	1	A52	Steel Hex. Cap Bolt	M12x30L	4
A6	Hex. Socket Cap Screw	3/8"x1"L	1	A53	Lift Cylinder	H51D2-40	1
A7	Spring Washer	3/8"	1	A54	Nut	M20xP1.5	1
A8	Washer	S1380221-3	1	A55	Universal Joint POS20	BB2038A	1
A9	Spring Washer	3/8"	1	A56	Hex. Socket Cap Screw	M14x35L	1
A10	Hex. Socket Cap Screw	3/8"x1"L	1	A57	Rear Vise	H51D1-03	1
A11	Stopper Bracket	S1380110-C	1	A58	Rear Vise Steel Plate	H51D2-05-A	1
A12	Length Stopper	460D2-64	1	A59	Flat Head Screw	M8x30L	4
A13	Welding Rod	S1380221-2	1	A75	Roller Holder	H51D3-07	1
A14	Length Rod	S1380221	1	A76	Auxiliary Roller	H51D2-02	1
A15	Length Setting Bracket	S1380110-B	1	A77	Auxiliary Shaft	H51D2-02-A	1
A16	Handle 3/8x30L	S1380416	1	A78	Set Screw	M6x8L	2
A17	Washer	S1380221-3	1	A79	Roller Setting Bracket	H51D3-07-A	2
A18	Spring Washer	3/8"	1	A80	Hex. Socket Cap Screw	M10x20L	4
A19	Hex. Socket Cap Screw	3/8"x1"L	1	A81	Spring Washer	M10	4
A20	Length Rod Right Bracket	S1380110-A	1	A82	Washer	M10	4
A21	Set Screw	5/16"x5/16"L	1	A83	Set Screw	M8x10L	4
A22	Washer	S1380221-3	1	A84	Hex. Cap Bolt	M12x20L	6
A23	Spring Washer	3/8"	1	A85	Spring Washer	M12	6
A24	Hex. Socket Cap Screw	3/8"x1"L	1	A86	Washer	M12	6
A25	Hex. Cap Bolt	M10x25L	3	A87	Set Screw	M8x20L	2
A26	Spring Washer	M10	3	A88-1	Cover Bracket	H51D3-15-A	1
A27	Washer	M10	3	A89	Washer	M6	4
A28	Side Plate	H51D3-06-A	1	A90	Round Head Soc. Screw	M6x8L	4
A29	Flat Head Screw	5/16"x3/4"L	4	A91-1	Small Column	H51D3-03-B	1
A30	Hex. Cap Bolt	M12x20L	4	A92	Round Head Soc. Screw	M6x8L	6
A31	Spring Washer	M12	4	A93-1	Cover	H51D3-03-C	1
A32	Washer	M12	4	A94-1	Guide Block	H51D2-03-E	1
A33	Work Out Table	H51D3-06	1	A95	Hex. Socket Cap Screw	M10x25L	9
A34	Spring Washer	M8	4	A96	Spring Pin	M8x20L	2
A35	Hex. Cap Bolt	M8x25L	4	A97	Steel Hex. Cap Bolt	M14x45L	4
A36	Spring Washer	M8	1	A98	Spring Washer	M14x45L	4
A37	Hex. Cap Bolt	M8x25L	1	A99	Spring Pin	M10x30L	2
A38	Scale Rod	H51D3-13	1	A112	Round Head Soc. Screw	M6x8L	4
A39	Limit Adjusting Block	H51D2-06	2	A113	Hydraulic Unit Cover	H51D3-01-C	1
A40	Thumb Screw	M8x25L	1	A114	Round Head Soc. Screw	M6x8L	4
A41	Cover Plate	H51D2-06-A	2	A115-1	Inverter Bracket	H51D3-29	1
A42	Upper Limit indicator	H51D3-13-A	1	A116-2	Inverter 7.5HP (220V)	H51D4-20	1
A43	Round Head Soc. Screw	M5x8L	2	A116-2	Inverter 7.5HP (380V)	W002B011	1
A44	Hex. Cap Bolt	M6x20L	2	A117	Round Head Screw	M5x8L	4
A45	Hex. Cap Bolt	M6x20L	2	A118	Wire Fixing Plate	H51D3-01-A	1
A46	Big Column	H51D2-01	1	A119	Round Head Soc. Screw	M6x8L	4
A47	Supporting Copper	H51D2-08	1	A120	Hex. Socket Cap Screw	M8x16	2

SECTION A - PARTS LIST

Part No.	Description	Size / Stock No.	Q'ty	Part No.	Description	Size / Stock No.	Q'ty
A121	Spring Washer	M8	2	A168	Spring Washer	M14	4
A122	Machine Base	H51D3-01	1	A169	Hex. Socket Cap Screw	M14x40L	4
A123	Thumb Screw	M8x25L	2				
A124	Coolant Plate	H51D3-12	1				
A125	Spring Pin	M10x30L	2				
A126	Spring Pin	M10x30L	2				
A127	Small Cover	H51D3-01-D	1				
A128	Round Head Soc. Screw	M6x8L	4				
A129	Spring Washer	M6	2				
A130	Hex. Cap Bolt	M6x16L	2				
A131	Coolant Pump	1/6"x210L	1				
A132	Big Round Head Screw	M6x12L	2				
A133	Bending Handle	9160502	1				
A134	Round Head Soc. Screw	M6x8L	2				
A135	Coolant Cover	H51D3-01-E	1				
A136	Oil Gauge	9160418	1				
A137	Chip Collector	H51D3-05	1				
A138	Blade Speed Control Panel	NP2E020	1				
A139	Round Head Soc. Screw	M5x8L	4				
A140	Control Panel	NP2E017	1				
A141	Round Head Soc. Screw	M5x8L	6				
A142	Round Head Soc. Screw	M6x8L	4				
A143	Flow Control Plate	H36D3-17	1				
A144	Round Head Soc. Screw	M5x8L	4				
A145	Electric Box Cover	H51D3-10-C	1				
A146	Bottom Plate	H51D3-10-B	1				
A147	Nut	M10	4				
A148	Cabinet Door	H51D3-10-A	1				
A149	Hex. Socket Cap Screw	M6x30L	2				
A150	Flat Head Screw	M8x30L	4				
A151	Front Vise Plate	H51D2-05-B	1				
A152	Front Vise	H51D1-02-A	1				
A153	Front Vise Pin	H51D2-11	1				
A154	Hex. Socket Cap Screw	M8x20L	24				
A155	Cutting Supporter (2)	H51D2-12-A	1				
A156	Cutting Supporter (3)	H51D2-12-B	1				
A157	Cutting Supporter (4)	H51D2-12-C	1				
A158	Cutting Supporter (5)	H51D2-12-D	1				
A159	Base Plate	H51D2-10	2				
A160	Vise Base	H51D1-01-A	1				
A161	Bracket	H51D1-09	1				
A162	Hex. Cap Bolt	M12x35L	4				
A163	Spring Washer	M12	4				
A164	Washer	M12	4				
A165	Round Head Soc. Screw	M5x6L	6				
A166	Cover	H51D3-21	2				
A167	Vise Cylinder		1				

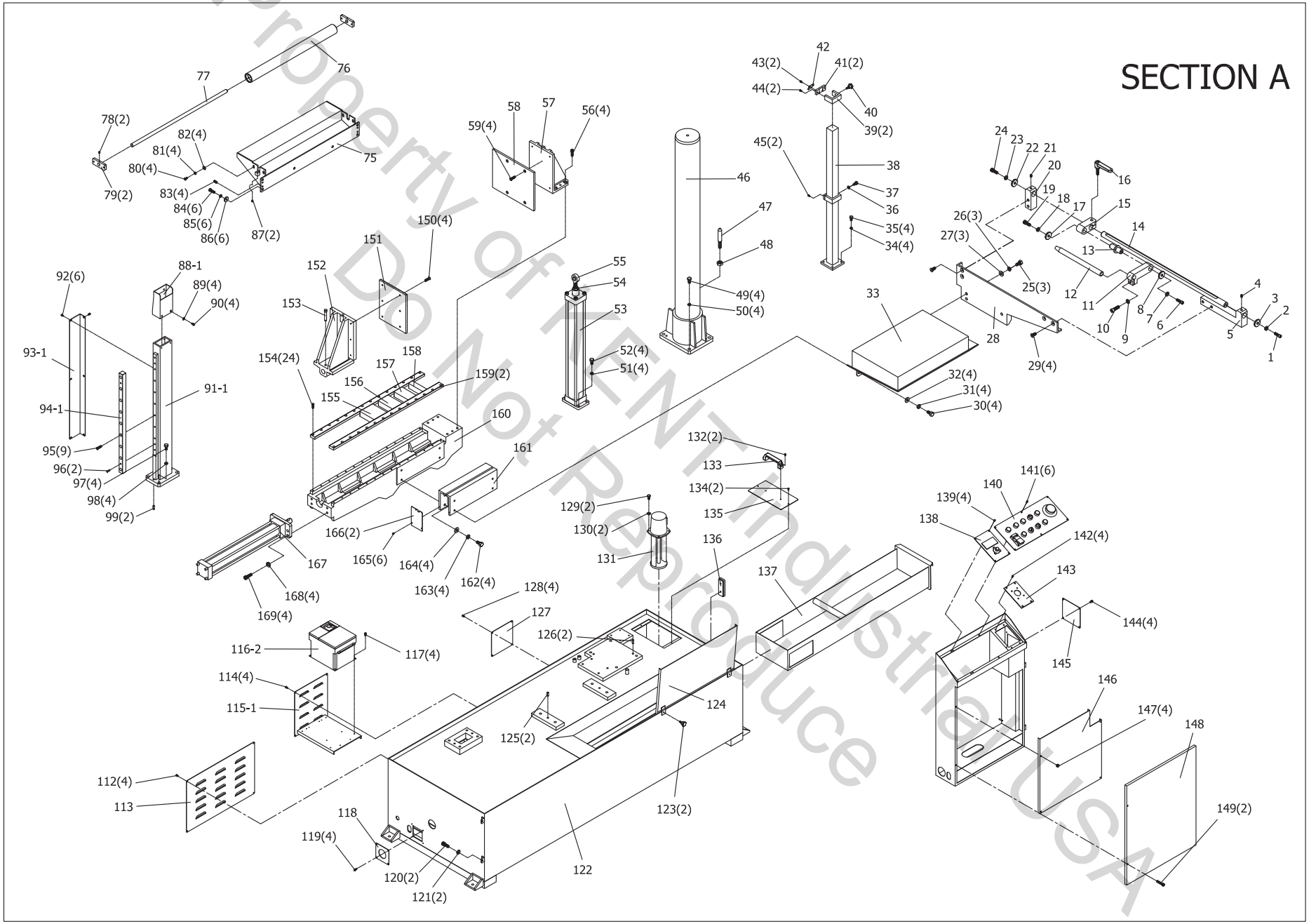

1091109-V5

SECTION B - PARTS LIST

Part No.	Description	Size / Stock No.	Q'ty	Part No.	Description	Size / Stock No.	Q'ty
B1	Round Head Soc. Screw	M8x25L	4	B48	Hex. Socket Cap Screw	M12x165L	4
B2	Position Lock	460D3-27-4	1	B49	Spring Washer	M12	4
B3	Spring	L25A4-04	1	B50	Slide	L46F1-18	1
B4	Set Screw	M4x12L	2	B51	Limit Switch		1
B5	Cap	460D3-27-6	1	B52	Hex. Socket Cap Screw	M4x35L	2
B6	Hex. Cap Bolt	M8x20L	2	B53	Slider Guides	L46F2-57	2
B7	Spring Washer	M8	2	B54	Washer	L46F2-56	1
B8	Hex. Cap Bolt	M8x20L	1	B55	Steel Hex. Cap Bolt	M12x30L	1
B9	Fixing Bracket	460D3-27-2	1	B56	Spring Washer	M12	1
B10	Cap	460D3-27-5	1	B57	Hex. Socket Cap Screw	M8x25L	6
B11	Long Arm	460D3-27	1	B58	Spring Washer	M8	6
B12	Short Arm	460D3-27-1	1	B59	Steel Hex. Cap Bolt	M14x55L	3
B13	Cap	460D3-27-3	1	B60	Spring Washer	M14	3
B14	Nut	M8	2	B61	Adjusting Screw	L46F2-51	3
B15	Hex. Socket Cap Screw	M6x20L	2	B62	Round Head Soc. Screw	M6x12L	4
B16	Nut	M10	2	B63-1	Guard Tube	H51D4-01	1
B17	Spring Washer	M10	2	B64	Hex. Socket Cap Screw	M12x35L	4
B18	Bearing Bush	L46F2-55	1	B65	Spring Washer	M12	4
B19	Bearing Bush (Long)	460D2-63-B	1	B66	Upper Bracket	H46D1-19	1
B20	Ball Bearing 6201	BB2150	4	B67	Round Head Soc. Screw	M6x8L	8
B21	Bearing Shaft (Long)	L46F2-54	2	B67-1	Oil Cup		1
B22	Guide Pin	3500210	1	B67-2	90° Fitting 1/8x1/8	L25A4-28	1
B23	Guide Spring	460D4-11	1	B68	Spring Pin	M10x30L	2
B24	Guide Screw	460D2-25	1	B69	Set Screw	M6x6L	1
B25	Spring Pin	M5x12L	2	B70	Shaft	H46D2-29	1
B26	Carbide Guide	460D2-26-A	1	B71	Hex. Socket Cap Screw	M14x30L	6
B27	Carbide Guide	460D2-26	1	B72	Oilless Bush 150100	BB2079	2
B28	Hex. Socket Cap Screw	M8x40L	1	B73	Dust Seal DKB150	H51D4-15	2
B29	Solid Pin	D10x17L	2	B74	Big Column Plate	H51D3-14	2
B30	Shaft Bush	460D2-27	1	B75	Spring Pin	M10x30L	2
B31	Bearing Bracket	460D1-22	1	B76	Column Sleeve	H51D1-04	1
B32	Ball Bearing 6200	BB2149	2	B77	Fixing Bracket	H51D3-08	1
B33	Front Bearing Seat	460D1-09	1	B78	Limit Switch		2
B34-1	Adjusting Bracket	H51D1-05-A	1	B79	Hex. Socket Cap Screw	M4x35L	4
B35	Steel Hex. Cap Bolt	M14x30L	3	B80	Washer	M6	4
B36	Spring Washer	M14	3	B81	Spring Washer	M6	4
B37	Washer	H51D2-03-C	3	B82	Round Head Soc. Screw	M6x12L	4
B38	Steel Hex. Cap Bolt	M14x45L	4	B83	Hex. Socket Cap Screw	M6x12L	1
B39	Spring Washer	M14	4	B84	Washer	M6	1
B40	Adjusting Bush Screw	H46D2-35	4	B85	Handle	L46F2-50	1
B41-1	Adjusting Spacer	H51D2-03-H	3	B86	Key	4x4x10L	1
B42-1	Bearing 6304	BB2158	3	B87	Adjusting Bolt	L46F2-49	1
B43-1	Eccentric Bushing	H51D2-03-G	1	B88	Round Head Soc. Screw	M6x8L	4
B44-1	Adjusting Bearing Bushing	H51D2-03-F	2	B89	Fixing Plate	H51D3-02-B	1
B45-1	Front Wheel Shaft	530D2-02-A	1	B90	Worm Reducer 135#	530D4-01	1
B46	Slider Seat	L46F1-17	1	B91	Key	20x12x50L	1
B47	Blade Tension Cylinder	H51D2-41	1	B92	Key	12x8x70L	1

SECTION B - PARTS LIST

Part No.	Description	Size / Stock No.	Q'ty	Part No.	Description	Size / Stock No.	Q'ty
B93	Spring Pin	8x20L	2	B140	Spring Washer	M16	1
B94	Motor Fixing Bracket	530D3-06	1	B141	Washer	530D2-11	1
B95	Shaft	530D2-06	1	B142	Driver Wheel	530D1-13	1
B96	C Ring	S-20	2	B143	Round Head Soc. Screw	M6x8L	3
B97	Adjusting Bracket	530D3-07	1	B144	Set Screw	M12x16L	2
B98	Motor	7.5HP	1	B145	Steel Hex. Cap Bolt	M16x45L	4
B99	Washer	M10	4	B146	Spring Washer	M16	4
B100	Spring Washer	M10	4	B147	Working Light	H36D5-30	1
B101	Hex. Cap Bolt	M10x30L	4	B148	Half Round Head Screw	M6x12L	4
B102	Key	10x8x70L	1	B149	Saw Bow	H51D3-02	1
B103	Hex. Socket Cap Screw	M8x20L	4	B150	Blade Guide Block	460D2-55	1
B104	Spring Washer	M8	4	B151	Spring Washer	M8	2
B105	Pulley Guard	530D3-09	1	B152	Hex. Socket Cap Screw	M8x40L	2
B106	Round Head Soc. Screw	M5x8L	1	B153	Rear Coolant Tray	H51D3-16	1
B107	Round Head Soc. Screw	M5x8L	3	B154	Shaft	H51D2-09	2
B108	Belt 22-670C	530D4-05	2	B155	Blade Guide Wheel	460D2-10	2
B109	Set Screw	M8x8L	1	B156	Bearing 6005	BB2142	4
B110	Motor Pulley	530D1-11	1	B157	C Ring	R42	2
B111	Reducer Pulley	530D1-10	1	B158	Washer	M10	2
B112	Washer	S1380205-2	1	B159	Spring Washer	M10	2
B113	Spring Washer		1	B160	Hex. Socket Cap Screw	M10x60L	2
B114	Steel Hex. Cap Bolt		1	B161	Hex. Socket Cap Screw	M10x30L	4
B115	Cover Plate	H51D3-09	1	B162	Spring Washer	M10	4
B116	Round Head Soc. Screw	M5x8L	4	B163	Washer	M10	4
B117	Wheel Cover Plate	H51D3-09-A	1	B164	Steel Plate Bracket	H51D1-06	2
B118	Round Head Soc. Screw	M5x8L	6	B165	Limit Switch		1
B119	Hex. Socket Cap Screw	1/4"x1/2"L	1	B166	Hex. Socket Cap Screw	M4x35L	2
B120	Spring Washer	1/4"	1	B167	Round Head Soc. Screw	M6x8L	3
B121	Washer	1/4"	1	B168	Front Coolant Tray	H51D3-18	1
B122	Brush Pulley Sleeve	331D2-42-A	2	B168-1	Blade	S02-K05	1
B123	Brush Pulley	S138 02-15-2	1	B169	Bearing 32014	BB2192	2
B124	C Ring	S15	2	B170	Idle Wheel	530D1-12	1
B125	Bearing 6002	BB2139	2	B171	Teeth Washer	AW14(M70)	1
B126	Brush Wheel Shaft	S138 02-15	1	B172	Bearing Nut	AN14(M70)	1
B127	Brush Bracket	S138 03-16	1	B173	Bearing Cover	530D1-14	1
B128	Nut	M10	2	B174	Hex. Socket Cap Screw	M6x16L	3
B129	Washer	M10	4	B175	Guide Arm Holder	H51D2-04	1
B130	Compress Spring	S1380409	2	B176	Set Screw	M10x16L	4
B131	Hex. Socket Cap Screw	M10x100L	2	B177	Hex. Socket Cap Screw	M10x20L	4
B132	Nut	M10	1	B178	Set Screw	M8x16L	3
B133	Set Screw	M10x75L	1	B179-1	Blade Guard (Front)	H51D3-18-A	1
B134	Set Screw	M6x6L	1	B180-1	Round Head Soc. Screw	M5x6L	2
B135	Brush Shaft	H51D2-07	1	B182	Hex. Socket Cap Screw	M10x35L	2
B136	Brush 4"	H46D4-02	1	B183	Spring Washer	M10	2
B137	Washer	M10	1	B184	Washer	M10	2
B138	Nut	M10	1	B185	Handle M12x50L	331D4-39	1
B139	Steel Hex. Cap Bolt	M16x35L	1	B186	Guide Arm	530D1-07	1

SECTION B - PARTS LIST

Part No.	Description	Size / Stock No.	Q'ty	Part No.	Description	Size / Stock No.	Q'ty
B187	Locking Block	460D2-46	1				
B188	Set Screw	M8x16L	3				
B189	Guide Arm (Rear)	H36D1-14	1				
B190	Spring Washer	M12	4				
B191	Steel Hex. Cap Bolt	M12x30L	4				
B192	Washer	M10	2				
B193	Spring Washer	M10	2				
B194-1	Blade Guard (Rear)	H51D3-17-A	1				
B196-1	Round Head Soc. Screw	M5x6L	2				
B197	Hex. Socket Cap Screw	M10x35L	2				
B198	Big Round Head Screw	M6x12L	2				
B199	Plastic Handle	9160502	1				
B200	Half Round Head Screw	M8x10L	2				
B201	Blade Cover	H51D3-04	1				
B202	Round Head Soc. Screw	M6x8L	2				
B203	Contact Plate	H36D3-16	1				
B204	Nut	M6	1				
B205	Hex. Cap Bolt	M6x16L	1				
B206	Fixed Block	460D2-44	2				
B207	Round Head Soc. Screw	M8x30L	4				
B208	Steel Pin	8x70L	2				
B209	Cover Lock	460D2-45	2				
B210	Round Head Soc. Screw	M6x16L	4				
B211	Brush Cover	H51D3-11	1				
B212	Round Head Soc. Screw	M6x8L	2				
B213	Spring Pin	M5x12L	2				
B214	Carbide Guide	460D2-26-C	1				
B215	Carbide Guide	460D2-26-B	1				
B216	Solid Pin	D10x17L	2				
B217	Shaft Bush	460D2-27	1				
B218	Bearing Bracket	460D1-22	1				
B219	Ball Bearing 6200	L25A5-01	2				
B220	Hex. Socket Cap Screw	M6x20L	2				
B221	Rear Bearing Seat	460D1-10	1				
B222	Nut	M10	2				
B223	Spring Washer	M10	2				
B224	Hex. Socket Cap Screw	M8x40L	1				
B225	Guide Pin	3500210	1				
B226	Guide Spring	460D4-11	1				
B227	Guide Screw	460D2-25	1				
B228	Bearing Shaft (Long)	L46F2-54	2				
B229	Ball Bearing 6201	BB2150	4				
B230	Bearing Bush (Long)	460D2-63-B	1				
B231	Bearing Bush	L46F2-55	1				

SECTION B

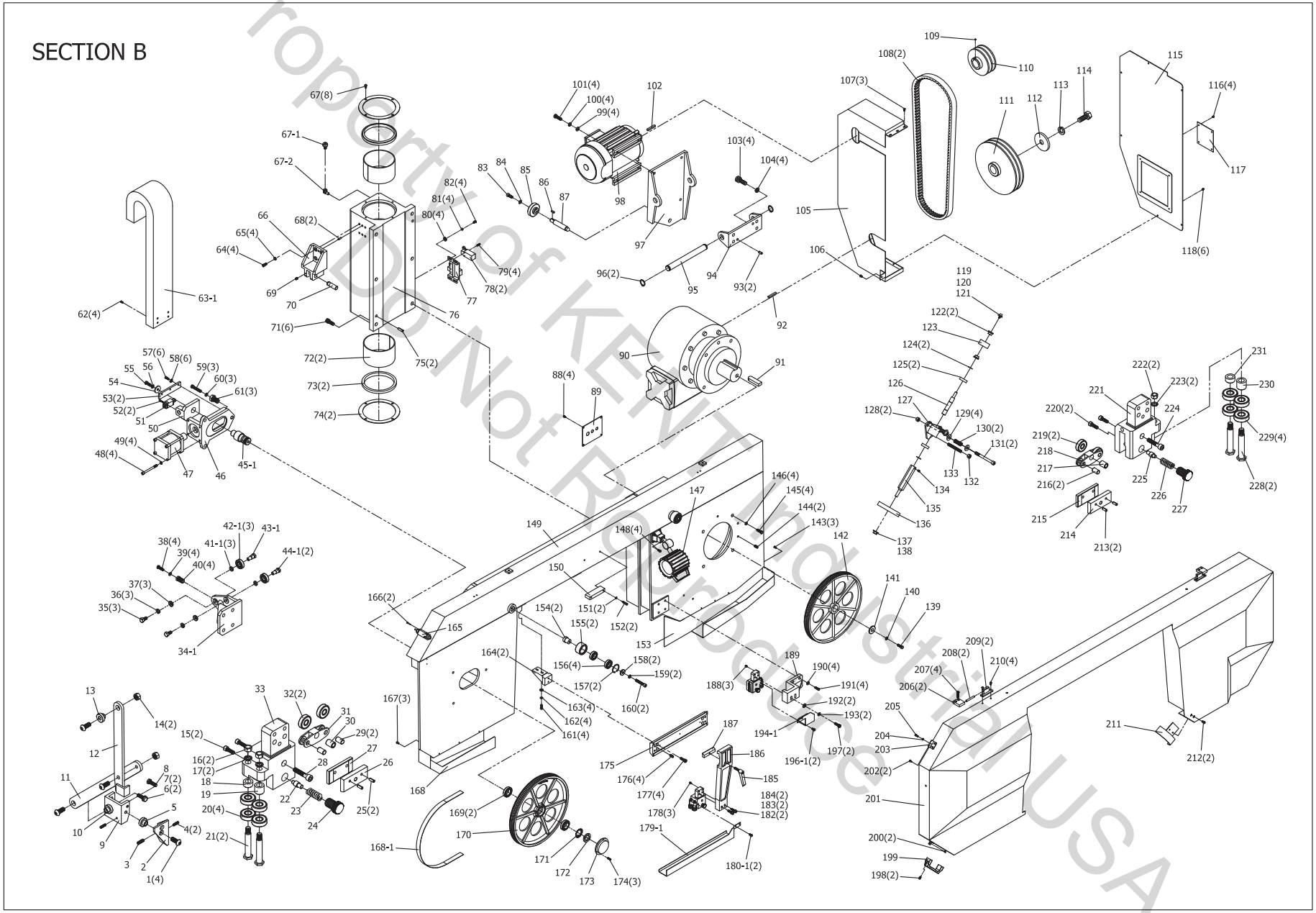

1050617-V3

SECTION C - PARTS LIST

Part No.	Description	Size / Stock No.	Q'ty	Part No.	Description	Size / Stock No.	Q'ty
C1	Power Indicator Light		1				
C2	Operation Start Button		1				
C3	Operation Stop Button		1				
C4	Blade Stop Switch		1				
C5	Bow Up Button		1				
C6	Down Feed Control Valve		1				
C7	Emergency Stop Button		1				
C8	Hydraulic Start Button		1				
C9	Coolant Pump Switch		1				
C10	Vise Open/Close Manual Switch		1				
C11	Bow Down Button		1				
C12	Blade Speed Readout		1				
C13	Blade Speed Adjust Knob		1				
C14	Main Power Switch		1				
C15	Main Motor Overload Relay		1				
C16	Inverter Contactor		1				
C17	Hydraulic Motor Overload Relay		1				
C18	Coolant Pump Contactor		1				
C19	Transformer		1				
C20	Terminal Board		1				
C21	Bow Up Control Relay		1				
C22	Bow Down Control Relay		1				
C24	Transformer Power in Fuse		1				
C25	Transformer Power in Fuse		1				
C26	Power in Fuse		1				
C27	DC Magnetic Valve Control Fuse		1				
C28	Bridge Rectifier System (AC to DC)		1				
C29	Blade Motor Contactor		1				
C30	Hydraulic Motor Contactor		1				
C31	Coolant Fuse		1				
C32	Coolant Fuse		1				
C33	Coolant Fuse		1				
C34	Vise Pressure Control Relay		1				
C35	Working Light Fuse		1				
C36	Capacitor		1				

SECTION C

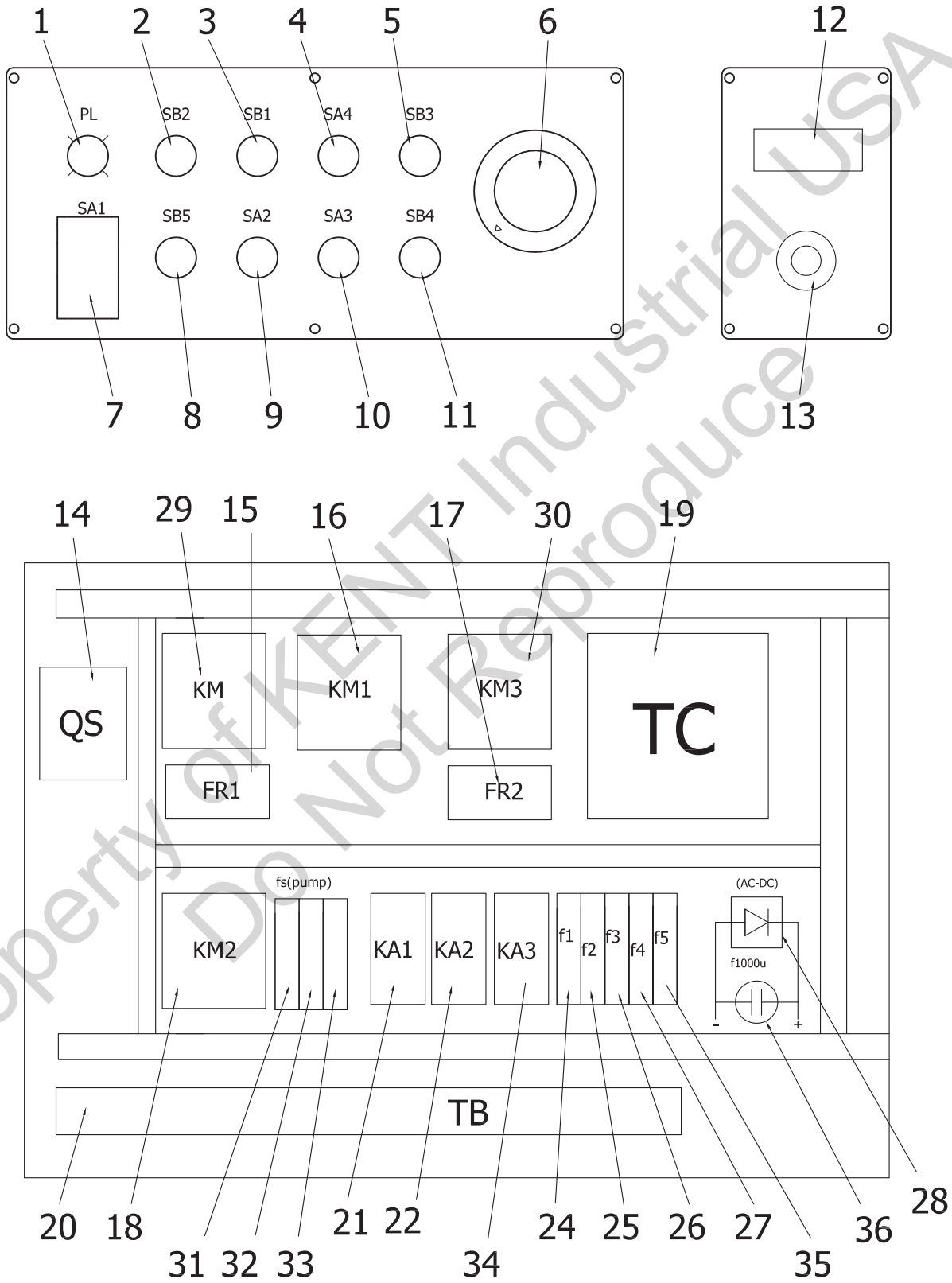

1050920-V2

SECTION D - PARTS LIST (OPTIONAL)

Part No.	Description	Size / Stock No.	Q'ty	Part No.	Description	Size / Stock No.	Q'ty
D1	Hex. Socket Cap Screw	M8x35L	4				
D2	O Ring P50	461D4-17	1				
D3	Top Cover	461I2-06-A	1				
D4	O Ring S70	L46N4-14	1				
D5	Spring Pin	4x8L	1				
D6	Adjusting Bolt	461I2-06-E	1				
D7	Spring Pin	10x120L	1				
D8	Piston	461I2-06-B	1				
D9	O Ring P58	H46D4-32	1				
D10	Spring	460D4-21	1				
D11	Press Base	461I2-06	1				
D12	Oilless Bush 5020	BB2063	1				
D13	Adjusting Nut	461I2-06-L	1				
D14	Attached Plates	H46A2-45	2				
D15	Press Block	461I2-06-C	1				
D16	Adjusting Plate	461I2-06-D	1				
D17	Hex. Socket Cap Screw	M8x20L	1				
D18	Hex. Socket Cap Screw	M8x20L	4				
D19	Set Screw	M6x8L	1				
D20	Adjusting Plate	461I2-06-D	1				
D21	Hex. Socket Cap Screw	M8x20L	1				
D22	Support Bar	461I2-06-I	1				

SECTION D (OPTIONAL)

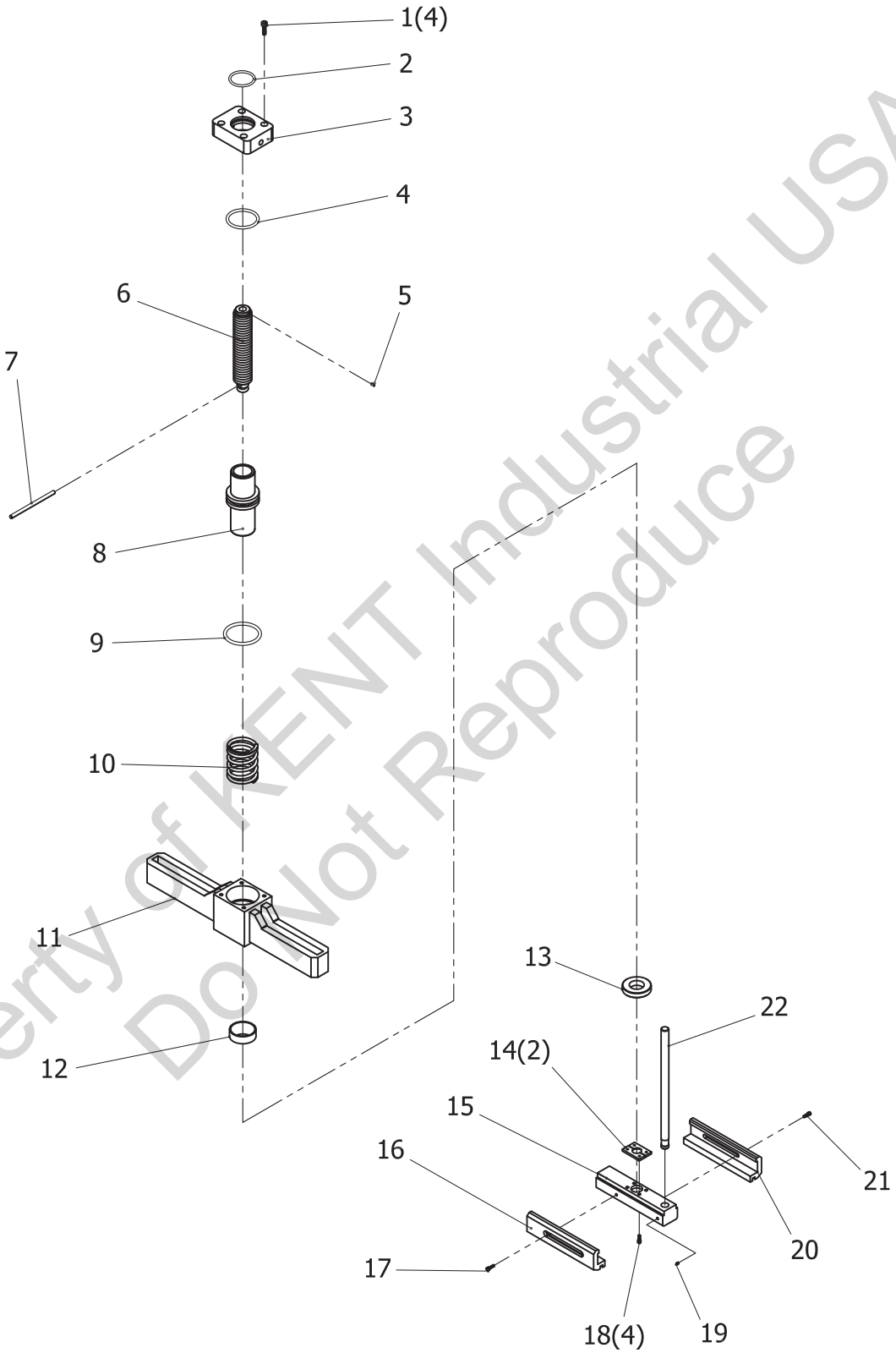

1050623-V1

SECTION E - PARTS LIST

Part No.	Description	Size / Stock No.	Q'ty	Part No.	Description	Size / Stock No.	Q'ty
E1	Fitting 1/4*1/4	L25A4-36	1				
E2	Cock 1/4*1/4	L25A4-48	1				
E3	Fitting 1/4*1/4	L25A4-36	1				
E4	Hose 1/4"	4500mm	1				
E5	Hose 1/4"	1400mm	1				
E6	90º Elbow 1/2*3/8	3300415	1				
E7	T- joint 3/8PT	L25A4-61	1				
E8	Fitting 3/8*1/4	L25A4-35	1				
E9	90º Elbow 3/8*1/4	L25A4-21	1				
E10	Reducing Elbow 1/4*1/8	L25A4-39	1				
E11	Cock 1/4PT*1/4	L25A4-49	1				
E12	Hose 1/4"	2000mm	1				
E13	Cock 1/4PT*1/4	L25A4-49	1				
E14	Hose 1/4"	300mm	1				
E15	Hose 1/4"	900mm	1				
E16	Y- joint 1/4	L25A4-60	1				

SECTION E

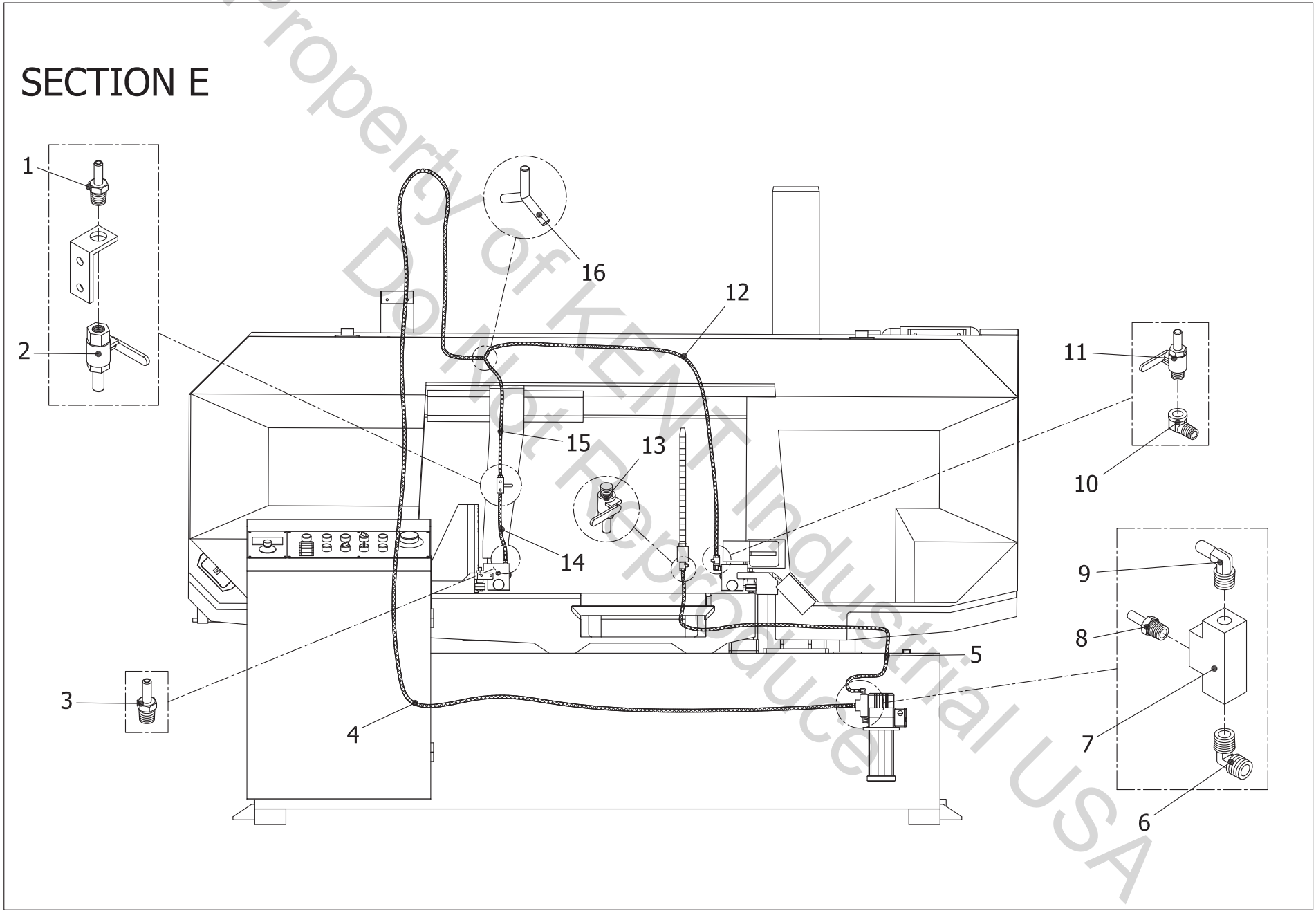

1091208-V1