Contents

Operator safety ---------- 3
Machine technical parameter ---------- 15
Noise level ---------- 18
Handling & installation ---------- 19
Machine's weight & lifting ---------- 19
Installation ---------- 21
Foundation plan ---------- 22
Cleaning ---------- 23
Electric supply connections ---------- 24
Chuck and chuck mounting ---------- 24
Operation ---------- 26
Lathe safety rules ---------- 26
Control layout of machine ---------- 27
Spindle speed ---------- 29
Pitch and feed selection ---------- 29
Installation & application of thread cutting dial ---------- 34
Apron & carriage control ---------- 38
Coolant pump and coolant ---------- 39
Tailstock ---------- 40
Dismount/remount gap piece ---------- 40
Maintenance & service ---------- 41
Machine accuracies ---------- 41
Adjustment of headstock clutch ---------- 42
Adjustment of headstock brake ---------- 43
Adjustment of spindle bearing ---------- 44
Change wheel ---------- 47
Lubrication ---------- 48
Machine accessories ---------- 50
Common faults and their removal ---------- 52
Perishable part list ---------- 53
Electromagnetic Clutch &Brake Machine ---------- 54
Spare Parts Section ---------- 67
Mouting of Taper Copy Device ---------- 115

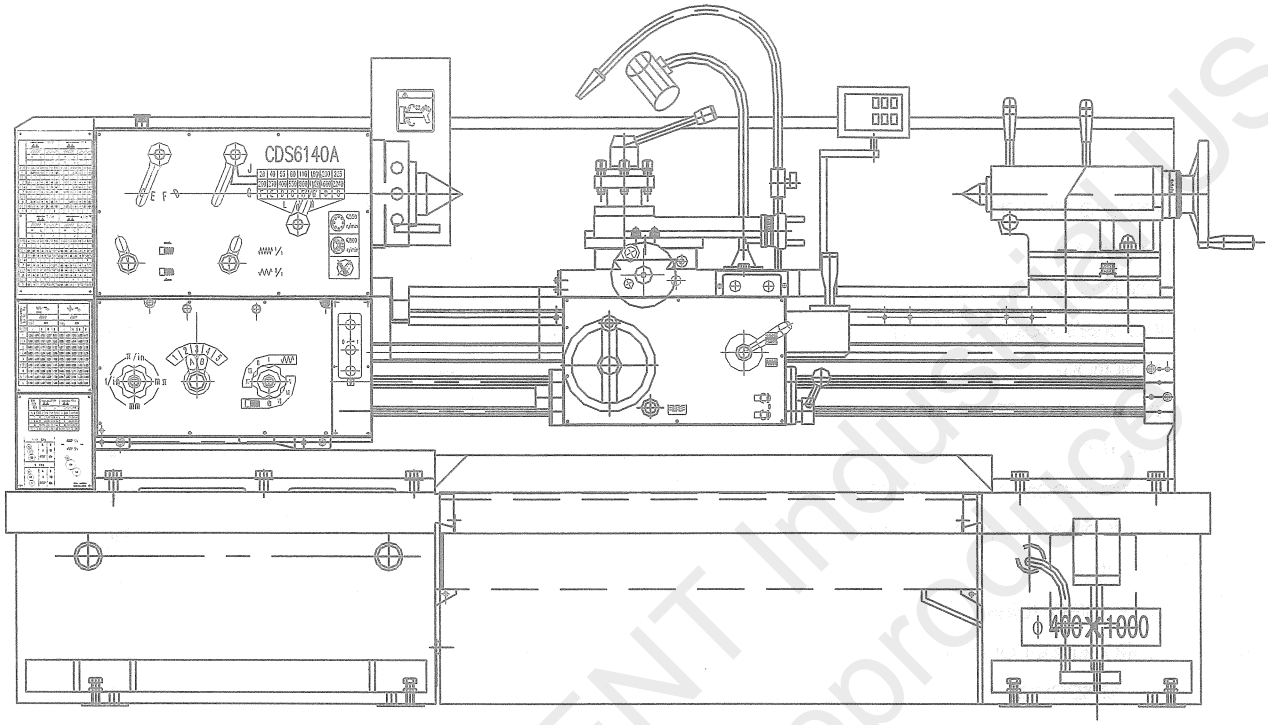

N.B: This Operating Manual is used for the Horizontal Lathe of CDS series (see the frontcover of this Operating Manual.).

Operator Safety

These lathes are fast, powerful machines which can be dangerous if used under improper circumstances.
Read the following Health and Safety Guidance Notes and observe before and during the use of the machine.

Health and Safety at Work Act
In accordance with the requirements of the Health and Safety General Specification for the Metal Cutting Machine GB15760-1995 issued by PRC, this manual contains the necessary information to ensure that the machine tool can be operated properly and with safety. It is assumed that the operator has been properly trained, has the requisite skill and is authorised to operate the machine, or if undergoing training, is under the close supervision of a skilled and authorised person.
Machine application conditions:
Ambient temperature: +5℃～+40℃
Altitude:not more than 1000m;
Relative humidity: not more than 50% when being in +40℃; (but the relative humidity canbe a little higher when it is in lower temperature.)
Adequate information is also provided to enable the machine to be properly serviced and maintained by persons with the necessary skills and authority.

Operating Safety Precautions

1.Keep the machine and work area neat, clean and orderly.
2.Keep all guards and cover plates in place and all machine cabinet doors closed.
3.Never lay anything on the working surfaces of the machine, where it may foul with rotating or moving parts.
4.Do not touch or reach over moving or rotating machine parts.
5.Ensure you know how to stop the machine before starting it.
6.Do not operate the machine in excess of its rated capacity.
7.Stop machine immediately anything unexpected happens.
8.Before mounting chucks or other spindle mounting items, the power should be switched off to avoid the rotaing of the spindle.
9.Do not interchange chucks or other spindle mounting items without checking for compatability with Dalian Machine Tool Corp. and workholding manufacturer.
10.Check load capacity of revolving centers for current application.
11.Isolate machine when leaving it unattended.
12.The max. workpiece weight is 500kg.

13.The chuck should be mounted on the spindle reliably and correctly.
14.Take care to ensure that the work piece is secure and the maximum safe speed for any operation is not exceeded.(See page 23---chuck speed limitation.)
15.Because of the possibility of bodly contact and whipping, especially when small diameters of material are used, bar stock must not, under any circumstances, be allowed to extend beyond the end of the headstock spindle without the use of special guarding and adequate support.
16.A mark, for chuck speed limit and no-speed-change during machine running, is mounted on the lower right of the headstock; Electric warning lable is on the cabinet; another warning label is on the chuck guarding---never touch manually workpiece (or chuck) when workpiece is swiveling.

Operating Hazards

When using the machine be fully aware of the following operating hazards detailed under the following instructions:

a)Cutting fluids

Cancer of the skin may be produced by continuous contact with oil; particularly with straight cutting oils, but also with soluble oils. The following precautions should be taken:
1.Avoid unnecessary contact with oil.
2.Wear protective clothing.
3.Use protective shields and guards.
4.Do not wear oil soaked or contaminated clothing.
5.After work thoroughly wash all parts of the body that have come into contact with oils.
6.Avoid mixing different types of oils;
7.Change oils regularly.
8.Dispose of oils correctly.

b)Safe operation of lathe chucks

All workholding devices must be clearly marked indicating the maximum safe RPM. This must not be exceeded. It must be noted that the maximum RPM marking usually assumes ideal working conditions. Lower maximum speeds should be used typically for the following reasons.

1.They apply only to chucks in sound condition;
2.If a chuck has sustained damage, high speeds may be dangerous. This applies particularly to chucks with grey cast iron bodies wherein fractures may occur;
3.The gripping power required for any given application is not known in advance.
4.The strength of the component being gripped, the area of the grip, the balance of the workpiece etc. will all have a major effect on the safe maximum RPM that can be used.

There is the possibility of the workpiece becoming insecurely gripped due to the influence of centrifugal force under certain conditions. The factors involved include:

(a)Too high a speed for a particular application;
(b)Weight and type of gripping jaws if non-standard;
(c)Radius at which gripping jaws are operating;
(d)Condition of chuck-inadequate lubrication;
(e)State of balance;
(f)The gripping force applied to the workpiece in the static condition;
(g)Magnitude of the cutting forces involved;
(h)Whether the workpiece is gripping externally or internally.

Careful attention must be paid to these factors. As they vary with each particular application, a manufacturer cannot provid specific figures for general use, the factors involved being outside his control.

General principles concerning operator safety for all lathes

(1) Do not grip a component with grease or oil on it.
Grip all components firmly.
Do not attempt to hold components that are too awkard or too difficult to hold.
Do not hold components that are too heavy for the machine.
Know how to hold components properly when lifting.

(2) Be sure to clean oil or grease from hand tools, levers and handles.
Be sure there is enough texture on the surface of the hand tool or lever handle for proper safe hand contact.

(3) Grip hand tools and lever handles firmly.
Always choose the proper hand tool and appropriate grip position on the lever handles.
Do not use hand tools or lever handles in an awkward position.
Do not apply excessive force.

(4) Always use the recommended gripping position to grasp hand tools and lever handles.

(5) Do not allow turning or hand tools to be caught in the chuck or other holding device.

(6) Do not use boken, chipped or defective tools.

(7) Be sure work piece cannot move in chuck or other holding device.

(8) Beware of irregular shaped work piece.

(9) Beware of large burrs on work pieces.

(10) Always select the correct tool for the job.

(11) Do not leave the unfixed hand tools or levers on the chuck.

(12) Do not use tools without handles.

(13) Always support the work piece as necessary using chucks, steadies and centres.

(14) Correctly locate tool in socket heads and screw slots.

(15) Be sure that all the screws are tight.

(16) Do not rush work.

(17) Never substitute the wrong size tools if the correct sized tool is not available or cannot be located in the shop.

(18) Do not move guards while lathe is under power.

(19) Do not place hand or body in path of moving objects.
Beware of moving lathe parts that can fall.
Beaware of where you are moving your hand or body in relationship to the lathe.
Be aware of hands or other parts of the body that may in position to be hit by a chuck or workpiece.

(20) Beware of accidentally moving levers, clutches (where applicable) or turning the power on.

(21) Know the function of each and every control.

(22) Never place hand on chuck or work piece to stop rotation of the spindle.

(23) On machines with clutch drive make sure clutch is completely disengaged on stopping, and kept properly adjusted.

(24) Make sure power has been turned off when lathe is unused for some time.

(25) Allow chuck to stop before operating it.

(26) Always check chuck area for chuck keys and loose items.

(27) Never start spindle with chuck key in the chuck.

(28) Do not allow distraction to interfere with lathe operations.

(29) Beware of lathe dangers when attending to other aspects of lathe operation, eg. whilst operating tailstock.

(30) Beware of loose chuck guarding and other guarding.

(31) Beware of loose hair near the rotating parts of the lathe.

(32) Beware of performing another operation while in close proximity to rotating parts on the lathe.

(33) Always attend to filing and deburring operations.
Always pay attention to file or deburring tools close to the chuck.
Files and deburring tools may catch on chuck.

(34) Beware of clutch (where applicable) position when jogging the spindle to different positions for gauging.

(35) Beware of hands resting on clutch levers.

(36) Be sure lathe is in neutral position when placing gauges on components gripped in the chuck.

(37) Be sure motor (on machines with clutches) is not running when using gauges on the machine.

(38) Always wear protection before operating the lathe.
Always wear the correct protection before operating the lathe.
Never remove protection for even a short time when operaing the lathe.
Wear protective devices correctly.
Know the correct way to wear protective devices.

(39) Beware of material flying from the lathes.

(40) Keep protective guards at the point of operation.

(41) When the chuck and workpiece are in motion never reach over, under or around a work piece to make an adjustment.
Never reach over, under or around a work piece to retrieve anything.
Beware of where you leave your tools during set up.
Never reach over, under or around work piece to move hand tool/lathe to another position.
Never reach over, under or around the work piece to tighten a lathe part.
Never reach over, under or around work piece to remove swarf.

(42) Know the proper procedure for applying loads.
Never apply force from an awkward position.

(43) Never mount a work piece too large or too heavy for the lathe.

(44) Never mount a work piece too large or too heavy for the operator to handle.

(45) Use the equipment necessary for handling workpieces.

(46) Never apply undue force on the accessory or control lever.

(47) Secure all workpieces.

(48) Secure all jaws, nuts, bolts and locks.

(49) Always use the correct equipment.

(50) Never take cuts beyond machine's capability.

(51) Never use ecxessive force in polishing, filing and deburring.

(52) Always use the proper hand tool to remove swarf.
Never hurry to remove swarf.
Beware of swarf wrapped around the chuck or workpiece.

(53) Never change gears by moving them with your hands. Only after power off, can the changewheel be changed.

(54). Beware of tools/lathe parts falling on controls.

(55).Confirm that if the max.speed of chuck and clamped worpiece permitting.

(56).Make sure the end guard door is closed before machine running.

(57).On the chuck guard cover,have a nameplate as show,means if spindle.

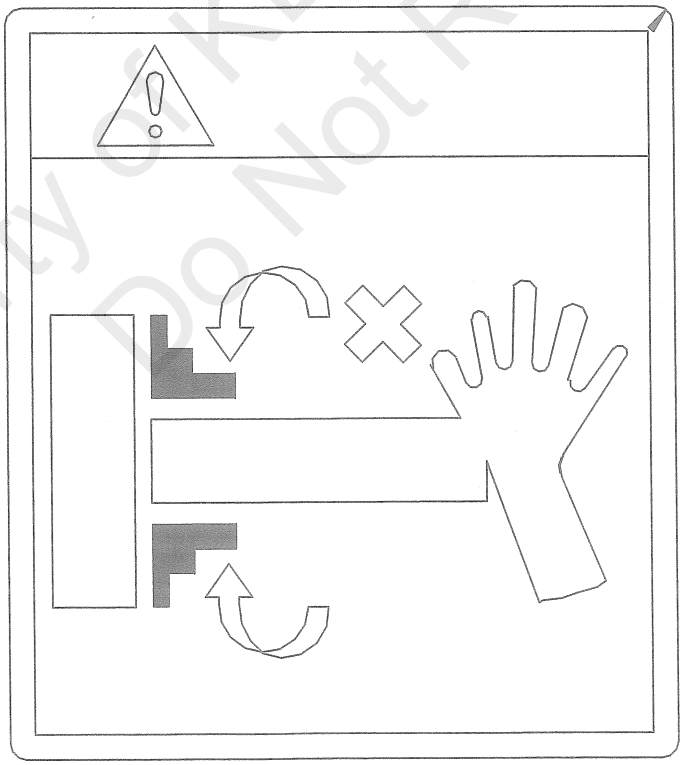

(58) On the end guard door,have 2 name plats as show,one means you do not tach the pully and belts,and another for you safty operating.

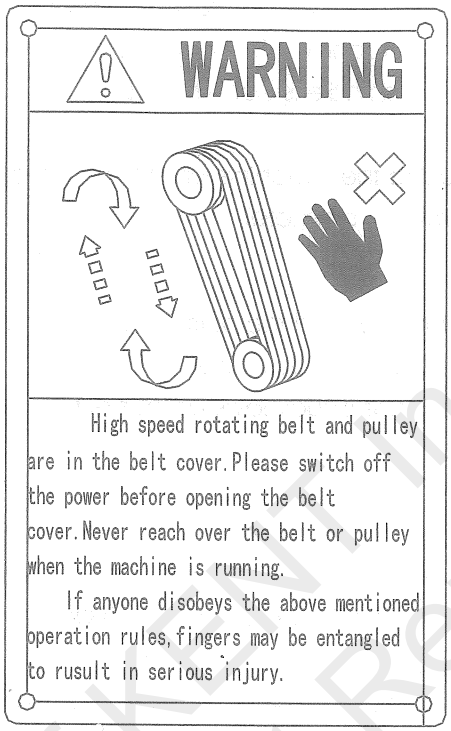

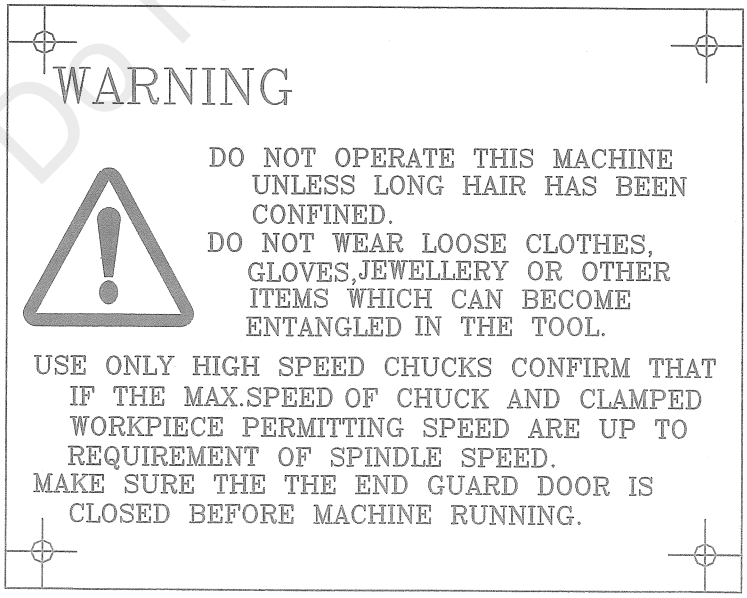

Chuck guards

The lathe is supplied with a chuck guard (optional) which is suitable only for use with the standard chucks normally supplied with the machine. This chuck guard (if applicable) must be in the fully closed position before the spindle is permitted to run.

(1) In the event of larger chucks being fitted to the machine an alternative chuck guard must be used which is appropriate to the chuck diameter.

Note:

It is not recommended that chuck jaws extend beyond the outside diameter of the chuck and in these cases interference with chuck guards may occur.
For safe operating practices always ensure that chuck jaws do not extend beyond the outside diameter of the chuck.

(2) In the event of a faceplate being used on the machine the normal chuck guard must be removed from it's mounting and if deemed necessary by the user alternative safe guarding facilities provided which are appropriate to the particular situation.

This can only be determined on a case by case basis when using faceplates and is therefore the responsibility of the user.

Scale boner

The lathe is supplied weith a scal boner (optional)

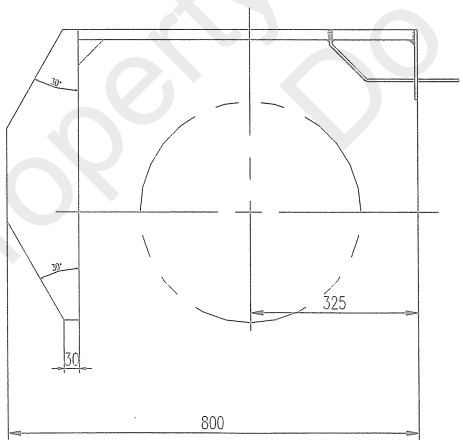

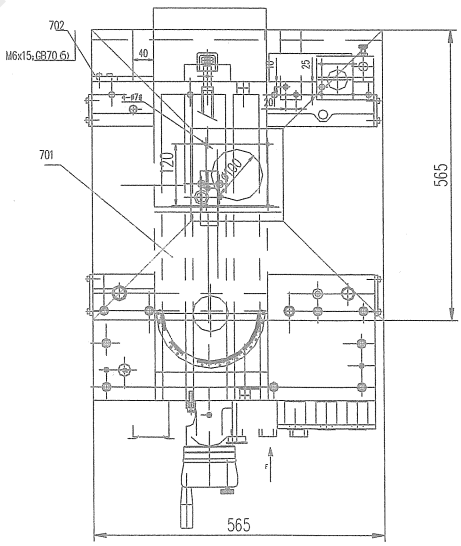

Accidents at Metalworking Lathes using Emery Cloth

Hazards:

A high proportion of all accidents at metalworking lathes involve the use of emery cloth and result in injuries such as broken and, occasionally, amputated fingers.

Emery cloth is used to deburr, polish or size a wide range of cylindrical, tapered and threaded metal components while they are rotating in lathes.

Most accidents happen when each end of a strip of emery cloth is held in separate hands and passed around the back of the component being linished. If the cloth is wrapped around the fingers and /or becomes snagged on the component while it is tightly gripped, then a serious injury is the likely result.

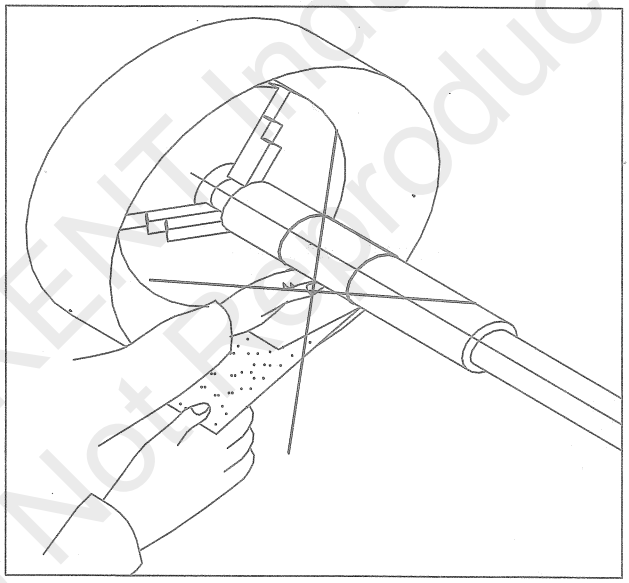

Precautions

Employers should assess the need to use emery cloth on components rotating in a lathe. Such operations may not be necessary if:

---the finish being sought is only cosmetic.

---a sizing operation can be successfully performed either by turing or by further operations in a dedicated polishing, linishing or grinding machine.

If the required tolerance is only achievable by the use of emery cloth against rotating components, then the emery cloth should be applied using either:

1).a backing board of good quality wood; or

2). a tool post onto which the emery cloth may be placed; or

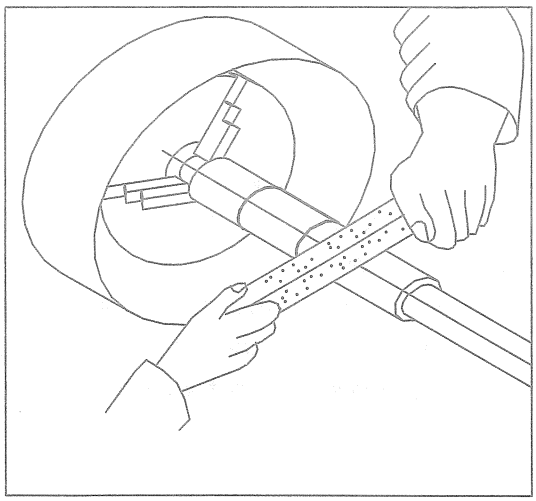

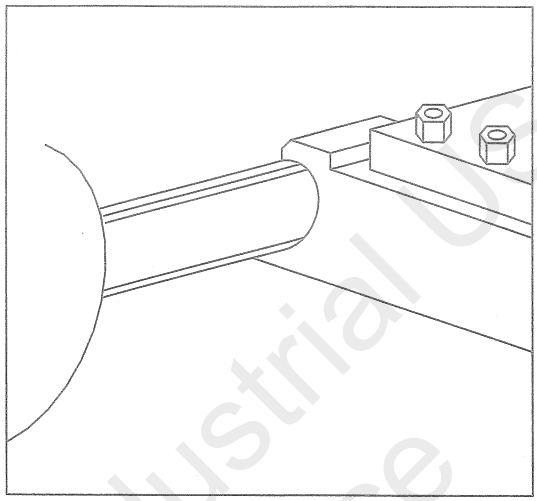

3) a 'nutcracker' consisting of two backing boards which are lined with emery cloth and joined at end and shaped so that they may pass the surface to be linished.

4) hand-held, abrasive-impregnated wire brushes.

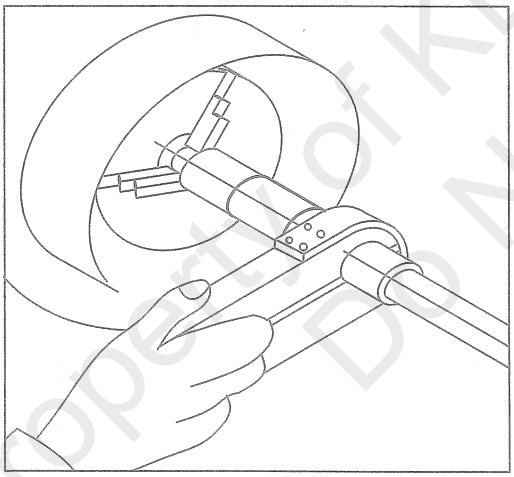

Force should be applied by pulling both ends of the cloth upwards, never allowing the cloth to go slack or to wrap around either the operator's finger or the components.

For polishing the ends of components, only very short lengths or pads of cloth should be used which are incapable of causing entanglements.
Gloves should never be worn when polishing is being carried out.

Machine technical parameters

Main technical specification

	CDS6 $\frac{1}{2}$ 40A/B/C	CDS6 $\frac{1}{2}$ 50A/B/C	CDS6 $\frac{1}{2}$ 56A/B/C	CDS6 $\frac{1}{2}$ 66A/B/C	CDS6 $\frac{1}{2}$ 76A/B/C
Max. swing over bed:	400 mm(16")	500 mm(20")	560 mm(22")	660 mm(26")	760 mm(30")
Max. swing of workpiece over carriage	230 mm(9")	290 mm(11 3/8")	350 mm(13 3/4")	440 mm(17 3/8")	540 mm(21 1/4")
Max. swing in gap piece:	700 mm(27 1/2")	760 mm(30")	790 mm(31")	870 mm(34")	965 mm(38")
Distance from spindle center to bed way:	220 mm(8 5/8")	250 mm(9 3/4")	310 mm(12 1/4")	325 mm(12 3/4")	375 mm(14 3/4")

Gap piece length	250 mm (10")
Max. workpiece length:	750 mm (30") 1000 mm (40") 1500 mm (60") 2000 mm (80") 2200 mm (88") 3000 mm (120")
Trip of Apron:	630 mm 880 mm 1380 mm 1880 mm 2080 mm 2880 mm

Bed

Bed width:	394 mm (15 1/2")
Guideway type:	V

Headstock

	CDS6140A CDS6150A CDS6156A CDS6166A CDS6176A	CDS6140B CDS6150B CDS6156B CDS6166B CDS6176B	CDS6140C CDS6150C CDS6156C CDS6166C CDS6176C
Spindle bore	Φ52mm(21/16")	Φ52mm(2 1/8")	Φ105mm(4 1/8")
Type of spindle nose:	C-6	D-8/(C-8)	D-8
Front spindle taper:	Morse 6	Φ90/1:20	
Spindle speed ranges:	16	16	16
Spindle speed:	28-2240 r/min	26-2000 r/min	

Note:When power is 50Hz,CDS6276B spindle speed is 23"1800 r/min.amd CDS6276V is 23~1530 r/min

Gear box

Feed rate:	
Longitudinal:	0.044-1.48
Cross:	0.022-0.74

Threads

Metric pitches	0.5-80 mm (37)
Imperial T.P.I	7/16-80 t/in (42)
Module pitches	0.25-40 mm (32)
Diametral pitches	7/8-160D.P. (42)

Top slide and cross slide

Tool shank section		25x25mm (1"x1")
Dist. btw spindle center & tool mounting surface		27mm (11/16")
Max. travel of top slide		150mm (6")
Top slide swivel		±45°
Max. travel of cross slide	CDS6140、CDS6150、CDS6256	348 mm (13 3/4")
	CDS6166、CDS6276	355 mm (14 ")
Pitch of cross slide leadscrew		5 mm (1/5")

Tailstock

Quill diameter	75mm (2 15/16")
Quill travel	150 mm (6")
Quill Morse taper	No.5 MT
Set over	±15mm (±3/5")

Motor

Type of main motor	Y132M-4B3
Power of main motor	7.5kW 10HP (11kW 15HP optional)
Power of motor for carriage rapid travel	250W 1/3HP
Power of coolant pump motor	150W 1/5HP
Flow of coolant pump	25L/min

Leadscrew

Diameter of leadscrew	40mm (1 9/16")
Pitch of leadscrew	12mm (1/2")

Overall dimensions and net weight of machine (excluding machine accessories)

Max. length of workpiece (mm)			750	1000	1500	2000	3000
Overall dimensions (mm)		Length	2350	2600	3100	3600	4600
		Width	1186				
		Height	CDS6140:1360 / CDS6150:1420 / CDS6166:1550				
Weight (kg) (Approx.)	Net	CDS6140	2050	2100	2150	2260	3030
		CDS6150	2100	2150	2200	2310	3080
		CDS6166	2150	2200	2250	2360	3150
	Gross	CDS6140	2620	2760	2950	3170	4010
		CDS6150	2670	2810	3000	3220	4060
		CDS6166	2720	2860	3050	3270	4110

Height from spindle center to floor	CDS6140:1100 mm CDS6150:1130 mm CDS6166:1205 mm	CDS6156:1160 mm CDS6176:1265 mm
Max. workpiece weight		500kg

Machine accessories(the packing list prevails).

Steady rest	CDS6140: ϕ 30~ ϕ 160 mm CDS6150/CDS6256/CDS6166/CDS6276: ϕ 30~ ϕ 200 mm
Big hole steady rest	CDS6150/ CDS6256/CDS6166/CDS6276: ϕ 152~ ϕ 305 mm
Follower rest	CDS6140: ϕ 20~ ϕ 80 mm CDS6150/CDS6256/CDS6166/CDS6276: ϕ 20- ϕ 100 mm
Big hole follower rest	CDS6150/ CDS6256/CDS6166/CDS6276: ϕ 76~ ϕ 216 mm
3-jaw chuck	CDS6140/A/B、CDS6150/A/B、CDS6256B: ϕ 250 mm CDS6140C、CDS6150C、CDS6256C、CDS6166、CDS6276: ϕ 315 mm
4-jaw chuck	CDS6140/A/B、CDS6150/A/B CDS6256B : ϕ 315 mm CDS6140C、CDS6150C、CDS6256C、CDS6166、CDS6276 : ϕ 400 mm

Noise level

The figure quoted are emission levels and not necessarily safe working levels.Whilst there is a correlation between the emission and exposure levels,this cannot be used reliably to determine whether or not further precautions are required. Factors that influence the actual level of exposure of the work-force include the characteristics of the work room,the other sources of noise,etc.i.e.the number of machines and other adjacent processes,and the length oftime for which an operator is exposed to the noise.Also the permissible exposure level can vary form country to country.This information,however,will enable the user of the machine to make a better evaluation of the hazard and risk.

Note: The conditions of measurement are with the spindle running at top speed, with a standard chuck

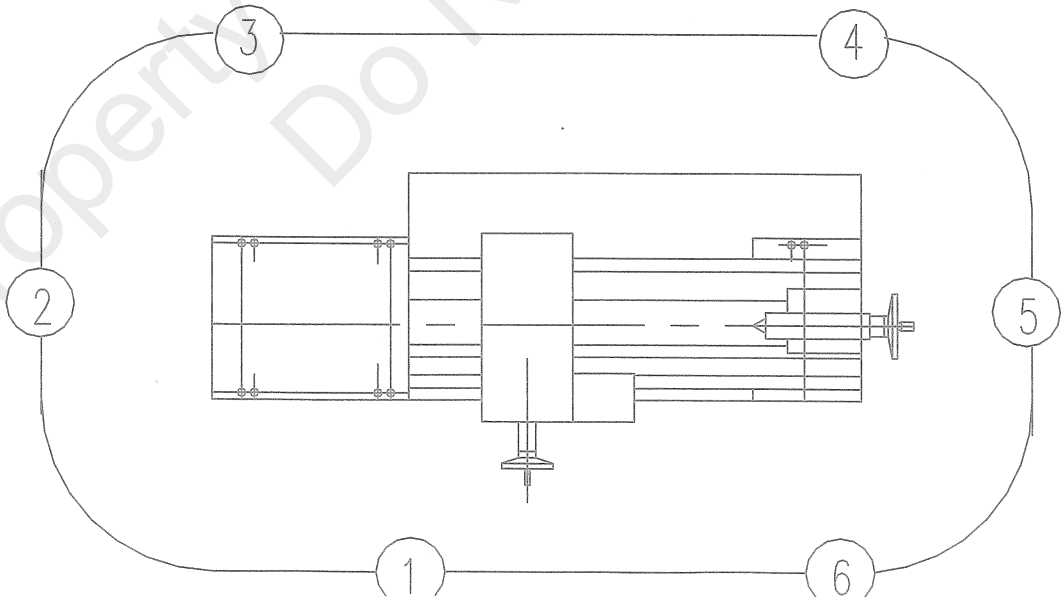

Handling and installation

Machine weight and hoisting
For the weight of the machine, see Page 17 of this Operating Manual.

Before hoisting, be sure that all the lifting items have the proper capability.

Preparations and safety check
1. Remove all items of loose equipment.
2. Clamp tailstock securely at the tailend of the bed.
3. Clamp saddle to the bed and tighten the plate clamp at the end of saddle.
4. Ensure eyebolts, shackle pins and securing screws of lifting equipment are correctly tightened.
5. Only use the correct lifting equipment;
6. Check whether the sling to be used are strong and reliable.

Do not sling around bed. Leadscrew and feed rod may be bent or damaged.

Handling

The sling should be placed according to the lifting marks and positions on the case when handling the packed machine. Care must be taken when lifting and lowering the machine to ensure the machine is not over inclined.

Unpacking

After unpacking, the external condition of machine must be checked first, and then the accessories, tools and documents should be checked for completeness according to the packing list.

Lifting

For machines with 750mm or 1000mm of distance between centers, position sling at the first angled web nearest to the headstock. For machines with 1500mm, 2000mm or 3000mm of distance between centers, position slings at the first angled web nearest to the headstock and the web furthest or further to the headstock. When lifting, place wood blocks between the sling and the guideways to protect the guideways from damage.

Carefully lift the machine clear of ground and if necessary readjust and reposition the saddle to achieve better balance before lifting further.

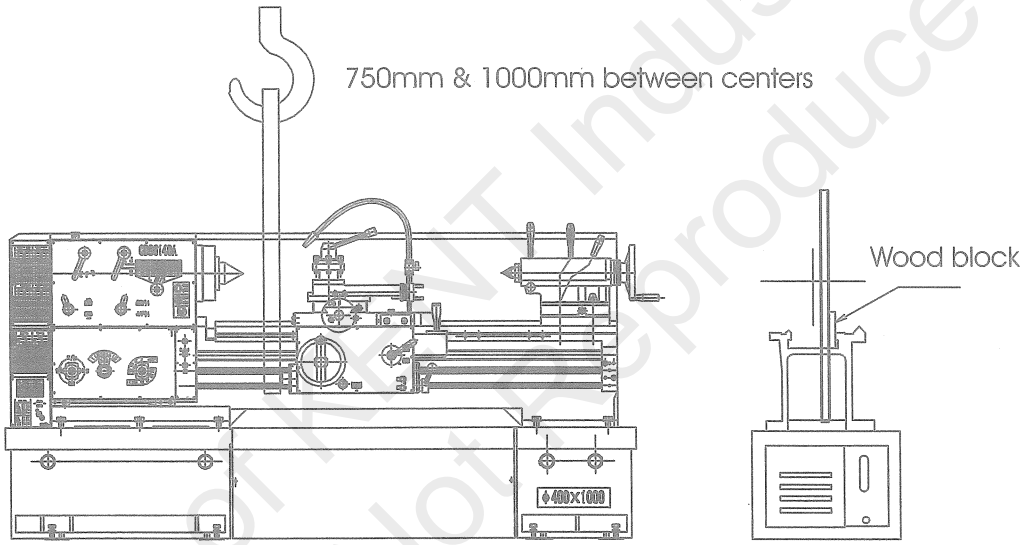

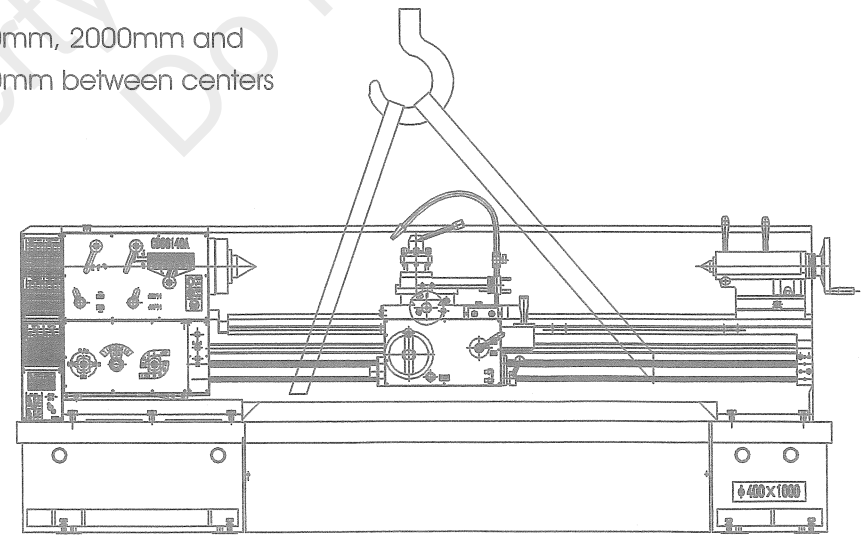

Rules for safe lifting

1. Never overload the lifting equipment.
2. Never use damaged slings.
3. Position the sling correctly. The sling must not be placed around sharp edges, do not let it slide over corners or along edges.
4. Never let goods drop down.
5. Position sling correctly to ensure easy removal after use.
6. Use smooth-rounded hooks having an inside radius of not less than 50mm.
7. Avoid placing more than one sling on the same hook.
8. Keep away from alkalis, acids and other dangerous goods.
9. Any greasy dirt on sling is not allowed.
10. Remember that vibration during transport can cause friction between sling and machine - use protective sleeves on slings.

Slings are made from 100% polyester or of steel ropes with enough strength. For lifting rough or sharp edged loads, we recommend the use of protective sleeves to protect slings from damage.
Each sling is clearly labelled with the safe working load and the safety factor is 6:1.
All slings are coloured coded for increasing safety.
Thorough check should be done to slings regularly.

Installation

Locate the machine on a flat, level solid foundation, allowing sufficient area for easy working and maintenance. The lathe may be used with level balanced when it is bolted to the foundation for maximum performance.

Foundation

Whether the machine is to be a free standing or fixed installation each jacking bolts must be positioned on one steel plate.
The dimensions of the steel plates should be of 15 mm depth and of approximately 50~80mm diameter.

Free standing

Position 8 (or 10) leveling wedges under the base to level the machine. Alternatively position the lathe on the foundation and adjust each of the 8 (or 10) jacking bolts in the base to take an equal share of the load. Then level the machine again using a precision level a week later. Thus the machine can be used normally.

Fixed installation

Position the lathe over 8 (or 10) bolts*M16X400*set into the foundation as per the dimensions in the base shown on the foundation plan.

Foundation plan Unit: mm

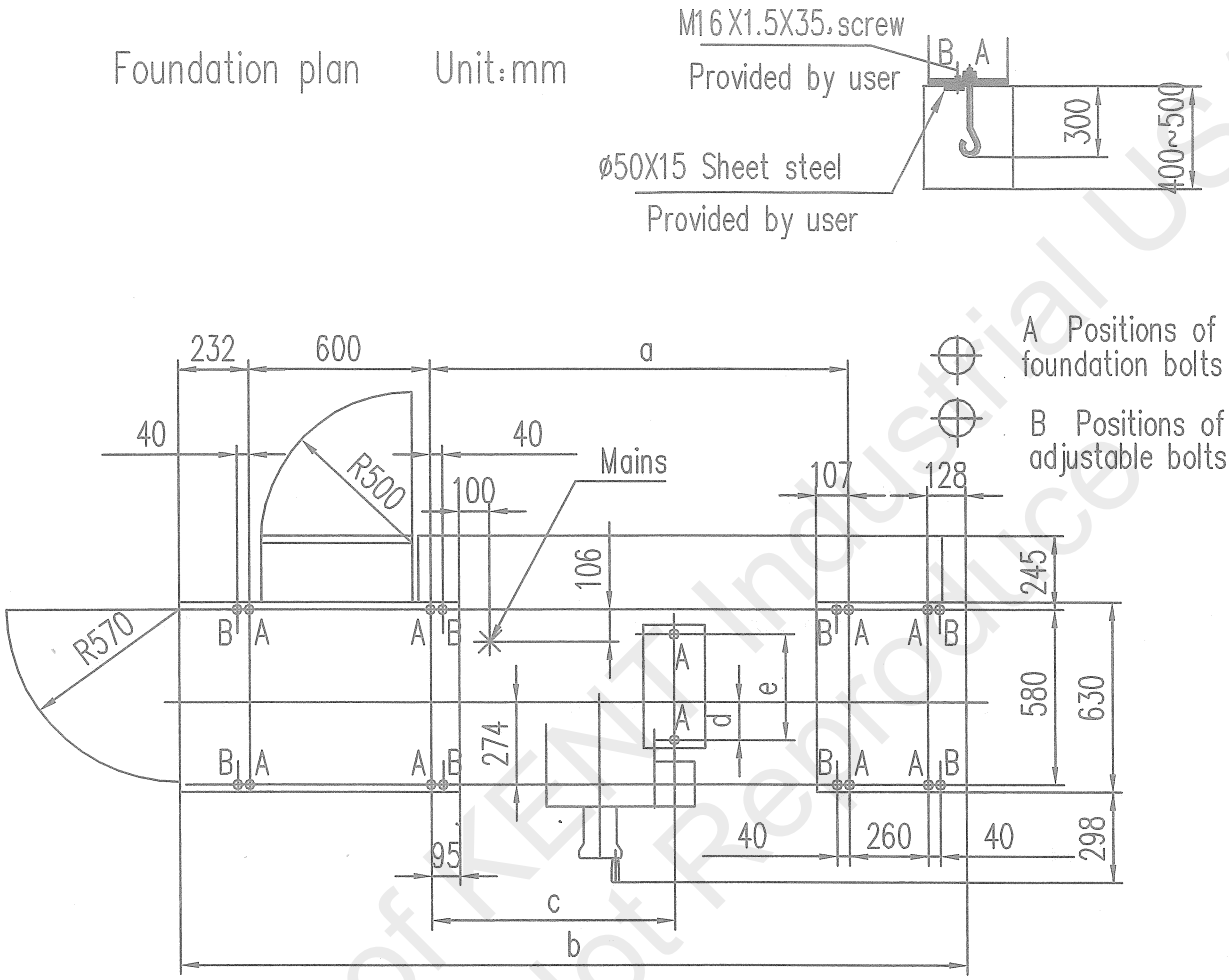

Dim / BC	a	b	c	d	e
750	1130	2350	——	——	——
1000	1380	2600	——	——	——
1500	1880	3100	——	——	——
2000	2380	3600	1070	126	350
3000	3380	4600	1600	274	580

Adjust each foundation bolt to take an equal share of the load. Level the machine with a precision level. Then tighten the foundation bolts and recheck the level of the bed.

Lubrication check

Be sure that the headstock and feed box are lubricated well. The oil tank mounted in the left leg is filled with 20 liters of L-FC15 bearing oil (or MOBIL Velocite 10) and regulate the oil level. The apron reservoir is filled with L-HM68 (or MOBIL D.T.E.26) antiwearing hydraulic oil to the level of the oil sight glass.
Before each shift, fill oil to the saddle, cross slide and tailstock with the supplied oil gun. For details see the lubrication part of maintenance section in the Operating Manual.

Headstock spindle bearings

All headstock bearings have been submitted to a running in procedure during test before delivery. It is however recommended that further running in is performed of the headstock bearings before any prolonged high speed rotation is undertaken.
Recommended speeds and duration:
15% of maximum speed for 1 hour
50% of maximum speed for 30 minutes
80% of maximum speed for 30 minutes

Cleaning

Before operating the machine remove the anti-corrosion coating with kerosene, from all guideways, leadscrew, feed rod, spindle taper bore and the tailstock quill. Do not use non-approved solvents i.e. cellulose solvents or petrol, as they are hazardous and will damage the paint finish. Oil all bright, machined surfaces immediately after cleaning.

Levelling

Using an engineers precision level (typical sensitivity 0.05mm/m) mounted on the cross slide level the machine end-to-end and front-to-back by adjusting the relevant jacking bolts. Align longitudinally and transversely as shown in Test No. G1 of the Certificate of Quality in order to eliminate "twist".

Electric supply connections

Input voltage 3-phase 380V 10%, 50Hz (it can also supply power for other machines with different power capacity.)

Recommended fuse: 25A (380V)

Power should be supplied from a separate fused distribution box, the line from the distribution box entering the electric cabinet and connected to the terminals of the cabinet. An earth lead must be used.

Correct rotating direction of the main motor may be determined by the following methods: Set the left/right thread lever on the headstock to the position of right-hand thread. When actuating rod No. 10 is raised, the spindle should rotate in normal forward direction. If the direction is wrong, cut off the mains and exchange any two of three phase wires of the input terminals in the electric cabinet. The electric circuit diagrams, the elements layout diagrams, the elements list and the electric wiring diagram are included in the Maintenance Illustrated Book.

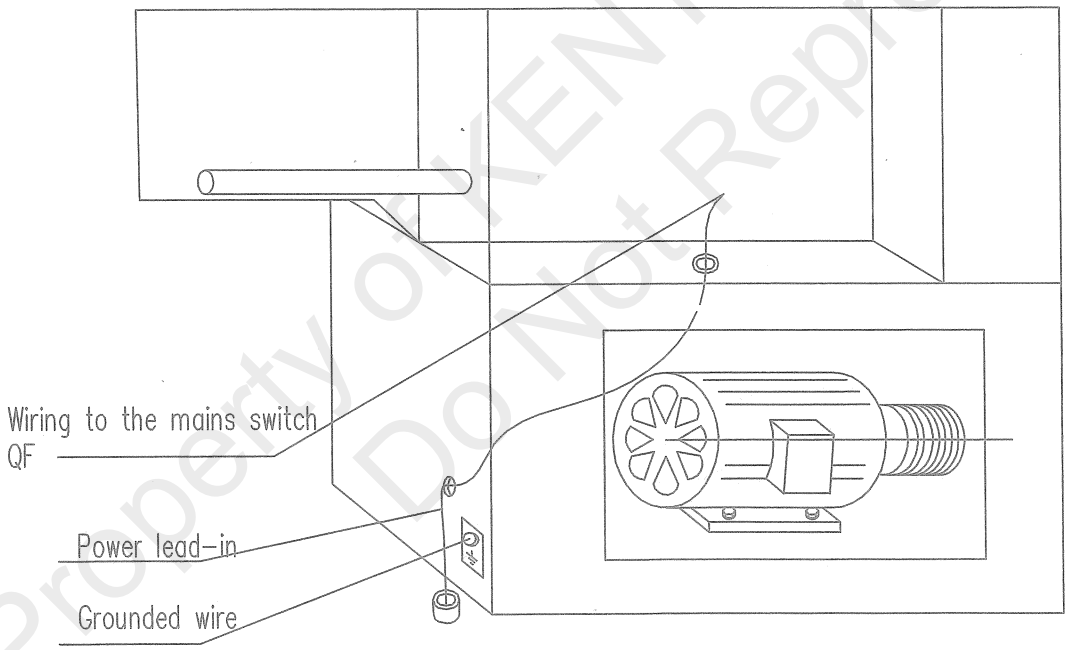

Chuck and chuck mounting

When fitting chuck or faceplate, first ensure that the spindle nose and chuck taper are clean.

For a C-type spindle nose, check whether the pin bolt of the chuck is mounted reliably. When mounting chuck, ensure that the lock nut is locked reliably.

For a D-type cam-lock spindle nose, ascertain that the cams lock in the correct position. When mounting a new chuck it may be necessary to reset the cam-lock studs (A). To do this, remove the locking screws (B) and set each stud so that the scribed line on it is flush with the rear face of the chuck and with the circular scallop in line with the locking screw hole. Then retighten the locking screws (B) to mount the chuck on the spindle nose and tighten the six cams on the spindle nose in turn. The cam should be locked correctly. And the proper loking position is that the lock mark in the cam should be between every two "V"s. Provided the cam is locked in this position, the chuck or face plate should be dismounted and readjust it as the above-mentioned procedure.

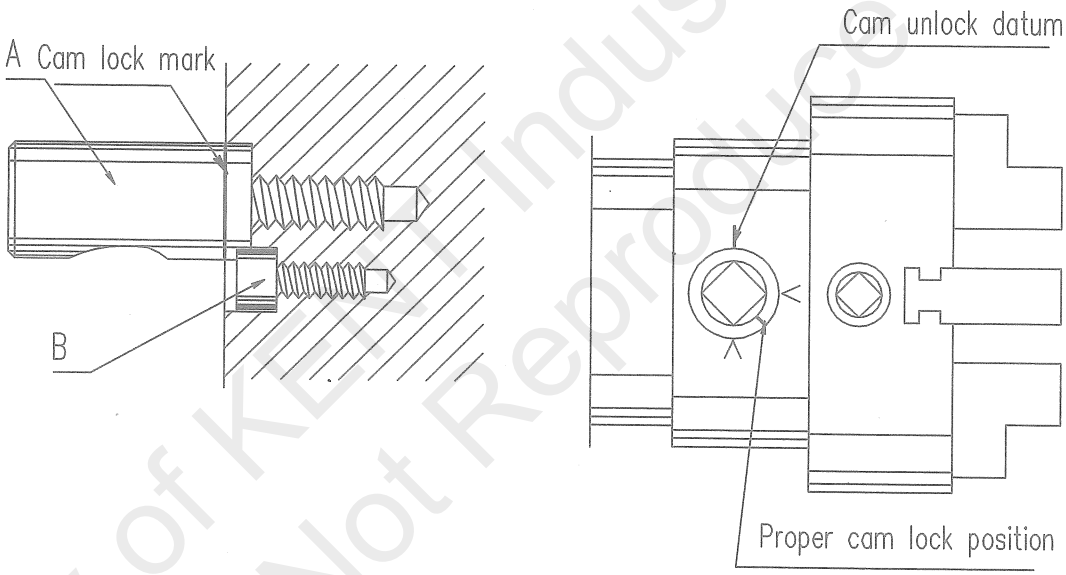

Warning

Take careful note of spindle speed limitations when using 4-jaw chuck or faceplate. For ϕ 315mm 4-jaw chuck,the spindle speed is not allowed to exceed 850r/min;for ϕ 380mm faceplate,the spindle speed is not allowed to exceed 550r/min.

The ϕ 480mm faceplate for gap bed machine must not be used when spindle speed is more than 500r/min. (Please refer to the data indicated in the nameplate on the machine.)

For a used ϕ 250mm 3-jaw chuck*the spindle speed must not exceed 1600r/min.

Any chuck with any defect e.g. crack must not be used for the machine.

It is recommended to use 3-jaw chuck of steel-disc body.

Operation

Lathe safety rules

Before starting the machine read carefully the operating instructions at pages 26 to 35 of this manual.

In the interests of safety please read the Operating Safety Guide at the beginning of this manual.

Key points:

1. Ensure you know how to stop the machine before starting it.

2. Stop the machine immediately anything unexpected happens.

3. Ensure speeds, feeds and depths of cut are compatible with the component and the holding devices.

4. Do not touch tooling, chuck or workpiece when spindle is revolving.

5. Wear and utilise suitable protective clothing and equipment.

Control layout of machine

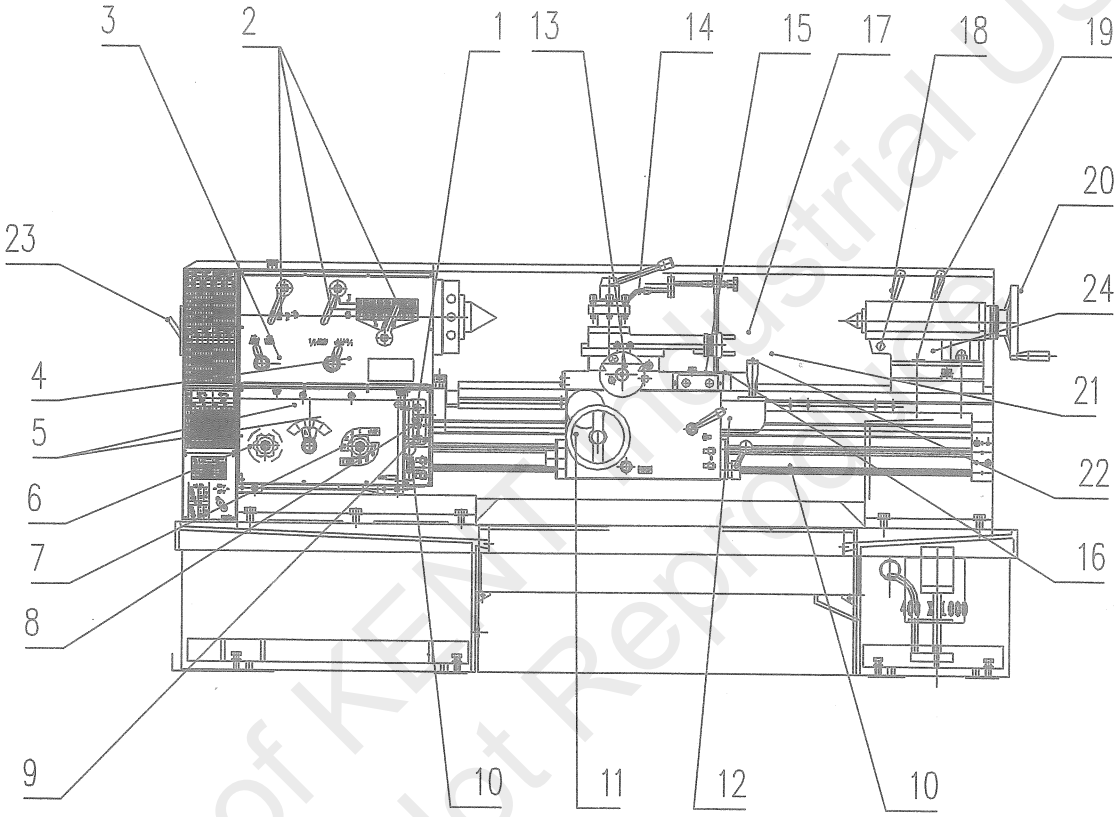

1. Emergency stop button
2. Spindle speed selector levers
3. Left/right thread lever
4. Pitch multiplying lever
5. Feed basic lever
6. Thread selector lever
7. Feed multiplying lever
8. Coolant pump switch
9. Power supply indicator
10. Spindle clutch lever
11. Apron longitudinal handwheeel
12. Split nut lever
13. Transverse handwheel
14. Top slide locking lever
15. Main motor start button
16. Main motor stop button
17. Top slide lever
18. Tailstock barrel lock lever
19. Tailstock quick-lock lever
20. Tailstock handwheel
21. Carriage long./trans. feed selector lever and rapid traverse button
22. Saddle lock screw
23. Machine power switch
24. Tailstock additional lock nut

Meaning and function of control symbols

Left	Left hand	Rightward feed	
Right	Right hand	Leftward feed	
1/1	Basic pitch/basic feed		
8/1	Multiplied pitch (8 times)		
	Coolant pump switch		
	Power supply indication		
mm	Metric thread		
m π	Module thread		
1/in	Imperial thread		
π /in	Diametral thread		
Z mm/○	Longitudinal feed per rev. of spindle		
X mm/○	Transverse feed per rev. of spindle		
	Thread cutting		
	Feed		
	Split nut disengaged		
	Split nut engaged		

Electric control

The mains switch (23) is on the left side of the machine or on E/cabinet door. When the switch is on, the power pilot lamp (9) lights. There are two safety switches (for cutting off power with door open). One is inside the belt cover and another is in the electric distributor door.

The control buttons, which are used to control the start and stop of the main motor, are in the front of the saddle. When press the start button (15), the main motor will start to run and when press the stop button (16) or the emergency stop button (1), the main motor will be cut off and stop running.

The control button, on the upper end of the lever (21) on the apron, is used to control the motor (for carriage rapid traverse) to start and stop.

The control button (8) of the coolant pump motor is located in the front of the feed box, which is used to control the start and stop of the coolant pump motor.

Rotation and brake of spindle

The control buttons, used to control the start and stop of the main motor, are in the front of the saddle. When the start button is pressed, the main motor will start running. With the clutch lever (10) up, the spindle forward clutch will be engaged and the spindle will run in the forward direction; with the lever down the spindle reverse clutch will be engaged and the spindle will run in reverse. With the lever in neutral position the spindle clutch will be disengaged and the spindle will be braked through the rod and the braking band in the headstock.

Spindle speeds

16 spindle speeds can be obtained by means of changing the setting of the lever (2) on the headstock.

Warning: Do not attempt to change the spindle speed when the spindle is running.

Pitch and feed selection

Normally metric thread, imperial thread, module thread or diametral thread can be selected directly without changing change gears. All pitches and feeds available are shown on the nameplates fitted to the feed box. The pitches obtained in the multiplied pitches are 8 times as much as those normal pitches. It should be noted that the multiplied pitches can be obtained only with the spindle speed lever in (J)-(L) positions.

The corresponding spindle speeds are:

CDS6140A/CDS6150A/CDS6166A: 80, 55, 40 and 28 r/min

CDS6140B/CDS6150B/CDS6166B: 72, 50, 36 and 26 r/min

CDS6140C/CDS6150C/CDS6166C: 72, 50, 36 and 26 r/min

With the spindle speed lever in (G.H) positions, multiplied pitches can not be obtained.

Warning: Multiplied pitches should not be selected in high spindle speed range. The change gears should be arranged to the diagrams shown on the nameplate.

For any other threads or pitches unavailable on the nameplate and the Operating Manual, please contact our Technical Department.

Only with the feed multiplying lever on the feed box is in V~VIII positions, can thread cutting be carried out. With the lever is in I~IV positions, the machine can make feed.

When the metric leadscrew of 12mm pitch is used, the change gears are arranged as follows:

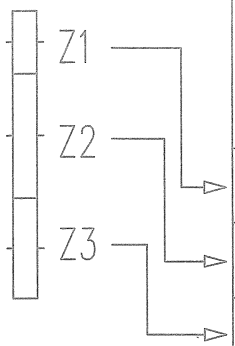

CDS6140A CDS6240A CDS6150A CDS6250A CDS6166A CDS6266A	CDS6140B CDS6240B CDS6150B CDS6250B CDS6166B CDS6266B	CDS6140C CDS6240C CDS6150C CDS6250C CDS6166C CDS6266C	
		1/1 Basic pitch	8/1 Multiplied pitch
36	36	27	36
69 (72)	57 (69)	57 (69)	57 (69)
54	72	72	72

Figures inside brackets are for CDS6150.

When the imperial leadscrew of 1/2 T.P.I is used, the change gears are arranged as follows:

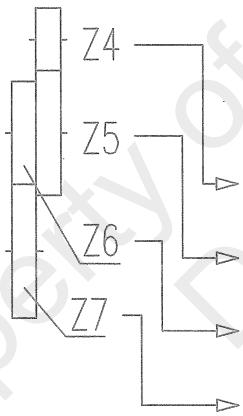

CDS6140A CDS6240A CDS6150A CDS6250A CDS6166A CDS6266A	CDS6140B CDS6240B CDS6150B CDS6250B CDS6166B CDS6266B	CDS6140C CDS6240C CDS6150C CDS6250C CDS6166C CDS6266C	
		1/1 Basic pitch	8/1 Multiplied pitch
39	39	29	39
57	76	76	76
58	58	52	58
63	63	56	63

Note: For CDS6140C,CDS6240C,CDS6150C,CDS6250C,CDS6166C and CDS6266C, when the basic pitch is changed into the multiplied pitch , the change gears in the change gear train should be changed no matter the master leadscrew is metric or imperial leadscrew.

For CDS61**A, CDS62**A,CDS61**B and CDS62**B,when the basic pitch is changed into the multiplied pitch, the change gears will not be changed.

The obtainsble threads with the metric leadscrew of 12mm pitch used:

Z1 / Z2 / Z3	mm				m π				1/in				π/in			
	H		L		H		L		H		L		H		L	
	G		J		G		J		G		J		G		J	
A B	V	VII	VI	VIII	V	VII	VI	VIII	V	VII	VI	VIII	V	VII	VI	VIII
1		0.875	1.75	3.5		0.4375	0.875	1.75								
3 1									80	40	20	10	160	80	40	20
2	0.5	1	2	4	0.25	0.5	1	2	72	36	18	9	144	72	36	18
1 4			2.75	5.5				2.75								
3	0.75	1.5	3	6	0.375	0.75	1.5	3	48	24	12	6	96	48	24	12
2 5									44	22	11	$5\frac{1}{2}$	88	44	22	11
4	1.125	2.25	4.5	9		1.125	2.25	4.5	32	16	8	4	64	32	16	8
5 3	1.25	2.5	5	10		1.25	2.5	5								
5									28	14	7	$3\frac{1}{2}$	56	28	14	7

Z1 / Z2 / Z3	mm				m π				1/in				π/in			
	L				L				L				L			
	J				J				J				J			
A B	V	VII	VI	VIII	V	VII	VI	VIII	V	VII	VI	VIII	V	VII	VI	VIII
1	3.5	7	14	28	1.75	3.5	7	14								
3 1									10	5	$2\frac{1}{2}$	$1\frac{1}{4}$	20	10	5	$2\frac{1}{2}$
2	4	8	16	32	2	4	8	16	9	$4\frac{1}{2}$	$2\frac{1}{4}$	$1\frac{1}{8}$	18	9	$4\frac{1}{2}$	$2\frac{1}{4}$
1 4	5.5	11	22	44	2.75	5.5	11	22								
3	6	12	24	48	3	6	12	24	6	3	$1\frac{1}{2}$	$\frac{3}{4}$	12	6	3	$1\frac{1}{2}$
2 5									$5\frac{1}{2}$	$2\frac{3}{4}$	$1\frac{3}{8}$	$\frac{11}{16}$	11	$5\frac{1}{2}$	$2\frac{3}{4}$	$1\frac{3}{8}$
4	9	18	36	72	4.5	9	18	36	4	2	1	1/2	8	4	2	1
5 3	10	20	40	80	5	10	20	40								
5									$3\frac{1}{2}$	$1\frac{3}{4}$	7/8	$\frac{7}{16}$	7	$3\frac{1}{2}$	$1\frac{3}{4}$	7/8

When thread of 1/2" imperial leadscrew is used:

Z4 / Z5 / Z6 / Z7	mm				m π				1/in				π/in			
	H			L	H			L	H			L	H			L
	G			J	G			J	G			J	G			J
A B	V	VII	VI	VIII	V	VII	VI	VIII	V	VII	VI	VIII	V	VII	VI	VIII
1			1.75	3.5				1.75								
3 1									80	40	20	10	160	80	40	20
2	0.5	1	2	4	0.25	0.5	1	2	72	36	18	9	144	72	36	18
1 4			2.75	5.5				2.75								
3	0.75	1.5	3	6		0.75	1.5	3	48	24	12	6	96	48	24	12
2 5									44	22	11	5 1/2	88	44	22	11
4		2.25	4.5	9			2.25	4.5	32	16	8	4	64	32	16	8
5 3	1.25	2.5	5	10		1.25	2.5	5								
5									28	14	7	3 1/2	56	28	14	7

Z4 / Z5 / Z6 / Z7	mm				m π				1/in				π/in			
	L				L				L				L			
	J				J				J				J			
A B	V	VII	VI	VIII	V	VII	VI	VIII	V	VII	VI	VIII	V	VII	VI	VIII
1	3.5	7	14	28	1.75	3.5	7	14								
3 1									10	5	2 1/2	1 1/4	20	10	5	2 1/2
2	4	8	16	32	2	4	8	16	9	4 1/2	2 1/4	1 1/8	18	9	4 1/2	2 1/4
1 4	5.5	11	22	44	2.75	5.5	11	22								
3	6	12	24	48	3	6	12	24	6	3	1 1/2	3/4	12	6	3	1 1/2
2 5									5 1/2	2 3/4	1 3/8	11/16	11	5 1/2	2 3/4	1 3/8
4	9	18	36	72	4.5	9	18	36	4	2	1	1/2	8	4	2	1
5 3	10	20	40	80	5	10	20	40								
5									3 1/2	1 3/4	7/8	7/16	7	3 1/2	1 3/4	7/8

Cutting of special imperial threads of 11 1/2 T.P.I. 13T.P.I. and 19 T.P.I. (The required change gears will be provided on special order.)

For CDS series machines, when a metric leadscrew is used as the master leadscrew, set the thread selector lever on the feed box to the imperial thread position (1/in); when a imperial leadscrew is used as the master leadscrew, set the thread selector lever on the feed box to "mm"; no matter the master leadscrew is a metric or imperial leadscrew, the multiplied pitch lever on the headstock should be set to the basic pitch position (1/1).

For cutting following threads on a CDS machine with a metric leadscrew of 12mm pitch as master leadscrew, the change gear arrangement and the lever settings will be as follows:

(Lever A & Lever B is 3)

T.P.I.	Change gear/ lever	CDS6140A CDS6240A	CDS6140B CDS6240B	CDS6140C CDS6240C
11 1/2	Z1/Z2/Z3	48/57/69	36/57/69	27/57/69
	Multiplying group lever	VI	VI	VI
19	Z1/Z2/Z3	48/69/57	36/69/57	27/69/57
	Multiplying group lever	VII	VII	VII
13	Z1/Z2/Z3	48/54/78	36/57/78	27/57/78
	Multiplying group lever	VI	VI	VI

Note: Z1/Z2/Z3 stand for the change gear arrangement from headstock to feed box.

For cutting following threads on a CDS machine with an imperial leadscrew of 1/2 T.P.I. as master leadscrew, the change gear arrangement and the lever settings will be as follows:

(Lever A & Lever B is 3)

T.P.I.	Change gear/ Lever	CDS6140A CDS6240A	CDS6140B CDS6240B	CDS6140C CDS6240C
11 1/2	Z1/Z2/Z3	32/57/69	48/58/69	36/76/69
	Multiplying group lever	VI	VII	VII
19	Z1/Z2/Z3	32/69/57	48/58/57	36/76/57
	Multiplying group lever	VII	V	V
13	Z1/Z2/Z3	64/69/39	48/76/39	48/76/52
	Multiplying group lever	V	V	V

Special thread table after change gear for metric leadscrew with pitch 12mm (for machining 3-start threads):

		mm				m			
		L		J		8/1			
A	B	V	VII	VI	VIII	V	VII	VI	VIII
1			5.25	10.5	21			5.25	10.5
1	4		8.25	16.5	33			8.25	16.5
4		6.75	13.5	27	54		6.75	13.5	27
5	3	7.5	15	30	60	3.75	7.5	15	30

When adopting fine thread for metric leadscrew with pitch 12mm, the metric/module threads can

be converted as follows (optional change gear):

ZA / ZB	mm				m			
	H		L		H		L	
	G		J		G		J	
A B	V	VII	VI	VIII	V	VII	VI	VIII
1	0.35	0.7	1.4	2.8		0.35	0.7	1.4
2	0.4	0.8	1.6	3.2	0.2	0.4	0.8	1.6
1 4	0.55	1.1	2.2	4.4		0.55	1.1	2.2
3	0.6	1.2	2.4	4.8	0.3	0.6	1.2	2.4
4	0.9	1.8	3.6	7.2	0.45	0.9	1.8	3.6

Change gear for fine thread	CDS6$\frac{1}{2}$40A CDS6$\frac{1}{2}$50A CDS6$\frac{1}{2}$66A	CDS6$\frac{1}{2}$40B CDS6$\frac{1}{2}$50B CDS6$\frac{1}{2}$66B	CDS6$\frac{1}{2}$40C CDS6$\frac{1}{2}$50C CDS6$\frac{1}{2}$66C
ZA	45	45	30
ZB	54	72	64

Mounting and use of thread cutting indicator

Mounting:

The thread cutting indicator is mounted on the front-right side of saddle and fixed on the right side of saddle with screw A. When the master leadscrew is at a standstill, engage the split nut. Loosen the screw A to make the thread cutting indicator inclined and engaged with the master leadscrew; tighten screw A. Loosen the screw B to make the reference line of the thread cutting indicator be aligned with a mark line on the plate of the thread cutting indicator; tighten screw B; up to now, disengage the split nut, and move the saddle to a proper position for cutting threads.

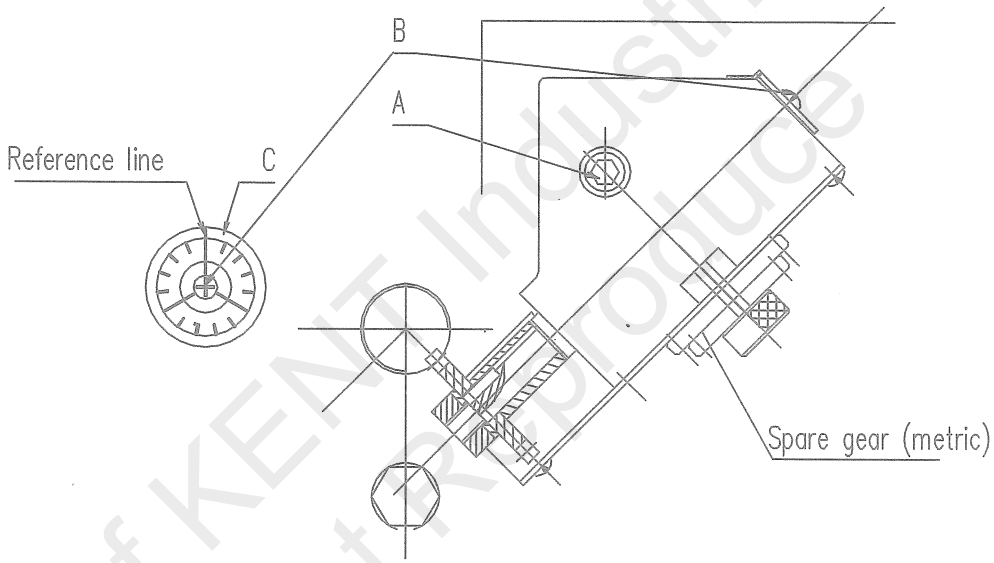

Application:

When the pitch of master leadscrew is not the whole multiples of workpiece pitch, the thread cutting indicator should be used for preventing mistake of thread cutting. Engage the split nut when both the master leadscrew and workpiece turn whole number revolutions by means of the thread cutting indicator to ensure a correct thread cutting.

Usage:

Find out the number of graduations which the thread cutting indicator should be turned in the pitch list as per the workpiece pitch. When cutting thread each time later, it meeds only to engage the split nut when the reference line alighs with the graduation number the thread cutting indicator turned, and no mistake will occur.

When the thread cutting indicator is not in use, loosen the lock screw B and lift the thread cutting indicator to make it disengaged from the master leadscrew. For the machine whose headstock is with friction clutch, the spindle forward/reverse and tool withdrawal for thread cutting, can be realized by operating the 3rd shaft lever without disengaging the split nut, so here we needn't thread cutting indicator; additionally, the reverse lever in the headstock can also be operated to realize the above mentioned movements.

When the master leadscrew is of metric leadscrew with pitch 12mm:

Pitch of workpiece (mm)							Threading value	Gear teeth No. of thread cutting indicator	Indicating plate (15 divisions/cycle)	
									Divisions turned	Cycles turned
0.5	0.75	1	1.5	2	3	4	1	15	1	1/15
6	12									
2.25	4.5	9	18	36			3		3	1/ 5
1.25	2.5	5	10	20			5		5	1/ 3
1.75	3.5	7	14	21	28	42	7	14		1/ 2
2.75	5.5	11	22				11	11		1

When the master leadscrew is of imperial leadscrew with pitch 1/2":

Pitch of workpiece (t./in)							Threading value	Gear teeth No. of thread cutting indicator	Indicating plate (12 divisions/cycle)	
									Divisions turned	Cycles turned
80	72	48	44	40	38	36	1	12	1	1/12
32	28	24	22	20	18	16				
14	12	10	8	6	4	2				
19	13	11					2		2	1/6
9	7	5	3	1						
11 1/2		5 1/2	4 1/2	3 1/2	2 1/2	1 1/2	4		4	1/3
1/2										

Forward and reverse rotation of leadscrew

The rotation direction of the leadscrew and feed rod may be reversed by means of the lever (3) on the headstock so as to realize left/right thread conversion.

Multi-start thread cutting
By repositioning the top slide one pitch forward for each start. Note that slide is normally set at the angle of 90° to the axis of the cross slide. Use a divided driver plate to turn the workpiece one division for each start. The pad that should be the same thick as the thread pitch should be mounted in the chuck to machine multi-start thread.

Control of saddle slide

Manual feed of the top slide may be carried out by means of the longitudinal and cross handwheels (11), (13). The power feed of the top slide is available by means of the cross lever (21).
Generally, left/right thread lever on the headstock should be set in right thread position. In this case the direction of the cross lever is the direction in which the slide makes power feed. If the switch at the end of the cross lever is pressed at the same time, the slide will make rapid traverse.
When the split nut lever on the apron is raised, the operation mentioned above may be carried out. The split nut and the slide feed are interlocked.

Control of feed box

There are 3 sets of levers (5), (6) and (7) mounted on the feed box.
Levers (5) are used to select threads, i.e. metric thread, imperial thread, module thread and diametral thread.
Levers (6) are lever A and B of basic group.
Lever (7) is the multiplying group lever. with it in Ⅰ, Ⅱ, Ⅲ, and Ⅳ the leadscrew rotates.
Normally the thread selecting may be done without changing the change gears, no matter what it is, metric thread, imperial thread, module thread or diametral thread.

Apron control

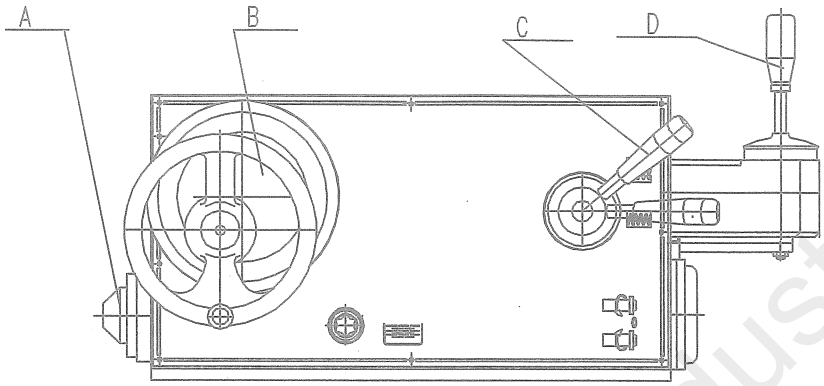

A:Knock off clutch B:Apron handwheel C:Split-nut knob D:Cross knob

Feed trip adjustment

A set of knock-off clutch is incorporated in the flange of apron. The clutch can enable the saddle to stop feeding when the feed force to the saddle is exceeds the preload. The transferring load is determined by spring pressure, which has been pre-set during constuction, but the end-user can do further adjustment as needed. The adjustment method is as follows: first, remove the lid E (in the left of apron) to make the machine run at low speed; then adjust screw F with wrench to adjust the pressure of G, so the knock-ff load can be adjusted. When feed force is out of the set value, when the clutch H and inner taper bush J generate slip movement, so the movement from the feed rod will stop at the position of H and J.

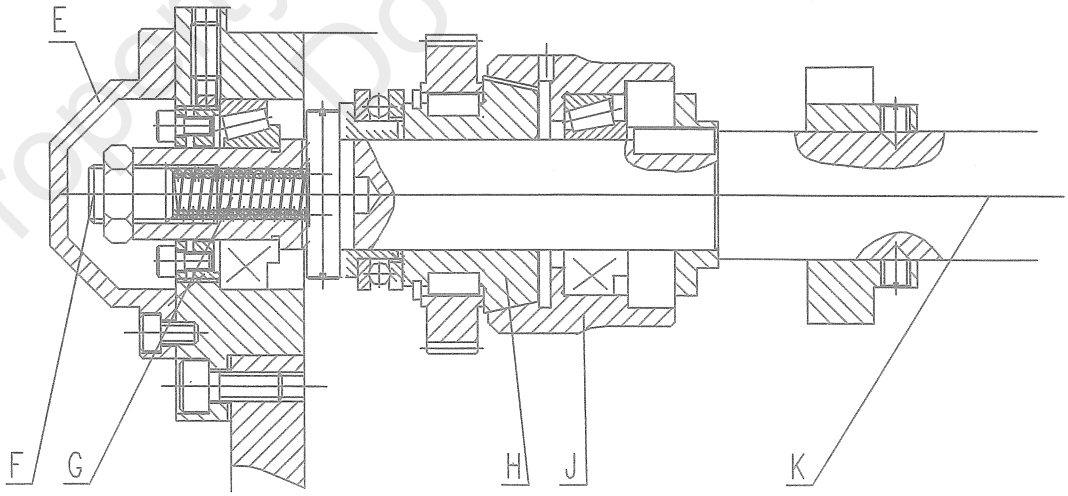

Apron handwheel

When move the saddle in longitudinal direction or make it rapid move with the cross knob, the apron handwheel will disengage automatically and stop. Only when the cross knob is in the neutal position, can the saddle be moved in longitudinal direction with apron handwheel.

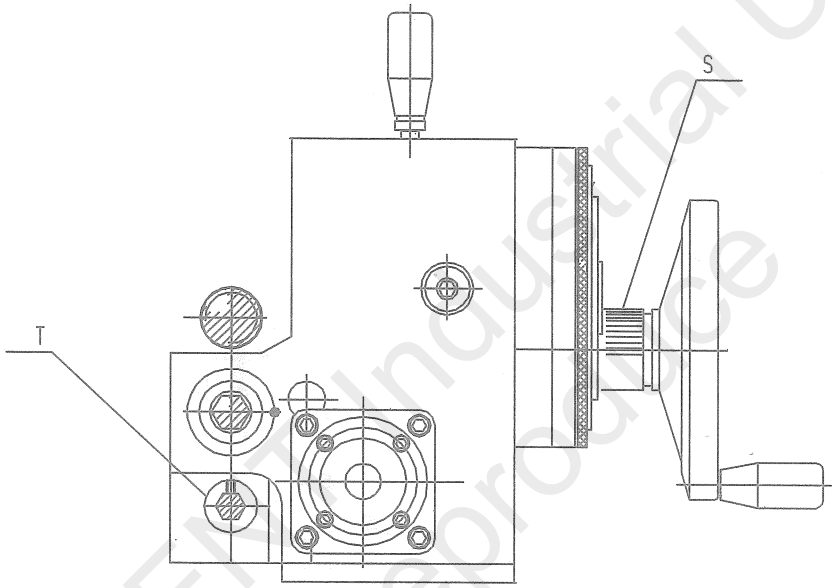

Longitudinal apron stop dog

The longitudianl apron stop dog T is mounted in the machine 3rd shaft control lever and is located in the left of apron. The set locking screw can stop the apron in longitudinal direction automatically to realize automatic set turning in one travel.

Saddle locking

The saddle locking screw (22) can lock the saddle on the saddle slideway to avoid its moving along machine bed.

Coolant pump and coolant

The coolant pump is operated by the on and off buttons located in the gear box;
The flow of coolant is controlled by means of the standpipe and hose;
The coolant tank is located at the back of the machine and has a capacity of 32 litres. Any commercially available coolant may be used.

Suggest you use coolant:

Supercoolant,products code is U1361 ,it suplid by SHELL CHEMICALS EUROUE B.V Netherlands.

Heavy Duty Soluble Cutting Coolant,products code is SPEC 910,it suplid by Alspec industries SDN BHD Malayysia.

Tailstock

The tailstock clamp lever (19) can clamp quickly the tailstock in the bed slideway to prohibit tailstock moving while finish turn and semi finish turn. Additionally, when rough turn or other heavy load cutting, the tailstock lock nut (24) shall be also locked. The tailstock barrel lock lever (18) is used to lock the tailstock barrel. When tailstock is used to turn taper components, the screws (C) in both sides of tailstock should be adjusted at the same time, so the tailstock can move the required distance transversely, next lock the lever (19) and screw (C).

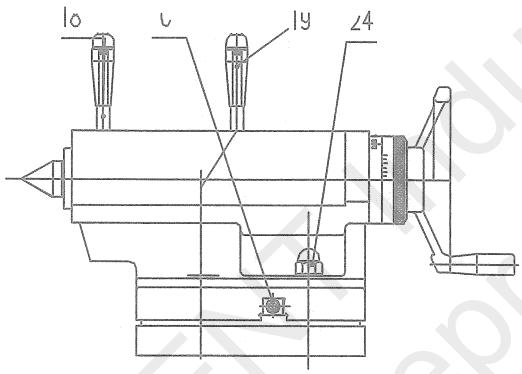

Dismount/remount gap piece

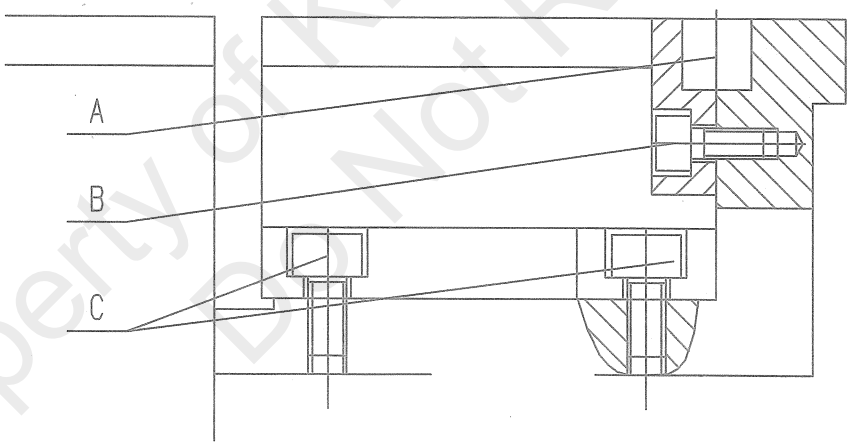

Procedures of dismounting gap piece:

1. Clean the area around the gap piece;
2. Take off the shear pin A;
3. Take off the screw B;
4. Remove the screw C;
5. Take off the leadscrew cover;
6. Remove the gap piece.

Procedures of remount the gap piece:

1. Clean the mating faces of gap piece to keep it clean;
2. Guarantee the machine bed in required level state;
3. Move slightly the gap piece to the mounting position;
4. Fit screw B and cylindrical pin A, then aligh them carefully with hide hammer;
5. Tighten screw C and B.

Maintenance & service

Machine accuracies

The machine, after installation and before starting to operate, should check all the accuracies. During machine running, check the machine accuracies periodically, to guarantee the long effective accuracies of the machine.

Inspection of headstock

After checking the machine's accuracies, it is suggested that the headstock accuracies should be checked. Inspection method: fit a piece of steel rod (dia. 50mm; length >150mm). Finish turn the cylinder without tailstock and the cylindricity should not be more than 0.015mm over 100mm.

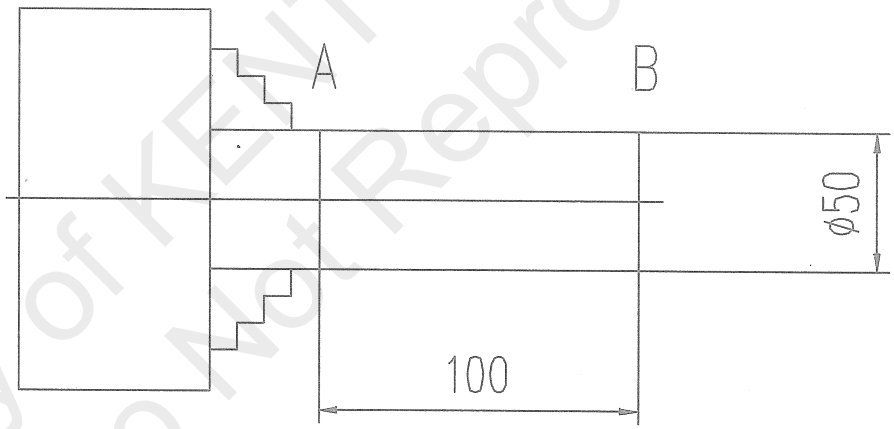

Tailstock inspection

Fit one piece of ground steel shaft (300mm) between centers, then move the micrometer along the center line to check the accuracies of the tailstock. Align the tailstock according to the way adjusting the screw (C) at page 39.

Regulation of driving belt

Switch off the mains when checking the tension of V belt, then press point D in the belt by hand. The tension should be regulated as follows: uncrew the two lock nuts C in the bolt B, then tighten the upper and lower lock nuts in turn.

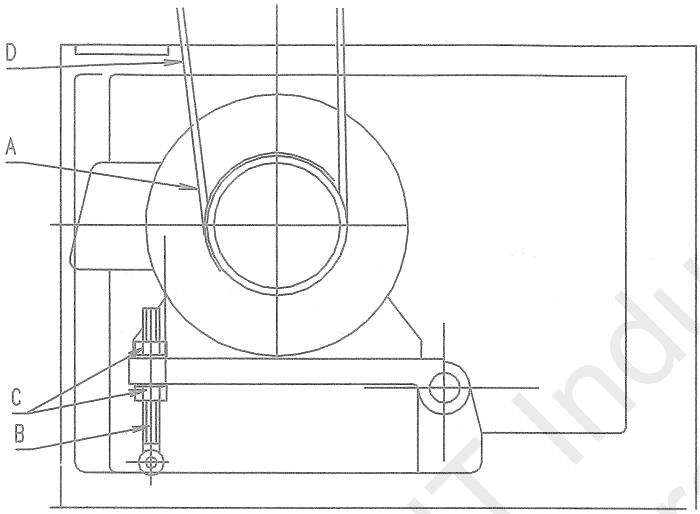

Machine model		CDS6140A CDS6240A	CDS6140B CDS6240B CDS6140C CDS6240C	CDS6150A CDS6250A	CDS6150B CDS6250B CDS6150C CDS6250C	CDS6166A CDS6266A	CDS6166B CDS6266B CDS6166C CDS6266C
V-belt Type & specification	50Hz	B84	B82	B86	B84	B92	B90
	60Hz		B83		B85		B91

Adjustment of headstock clutch

Two plate clutches are incorporated in the headstock, which respectively transmit the torques of spindle forward and reverse rotations. With the standard chuck fitted, if the time, from spindle stop to start at high speed, exceeds the range of 3~4 seconds, it is necessary to adjust the clutches. Adjusting procedure is as follows:

1. Cut off the machine power supply.
2. Set the spindle to the neutral position --- "O".
3. Open the headstock cover.
4. Press down the shear pin E to compress the spring F. Turn the two nuts G respectively to adjust the pressure of the friction disc H.
5. Reset the shear pin to the notch of the nut G and close the headstock cover.

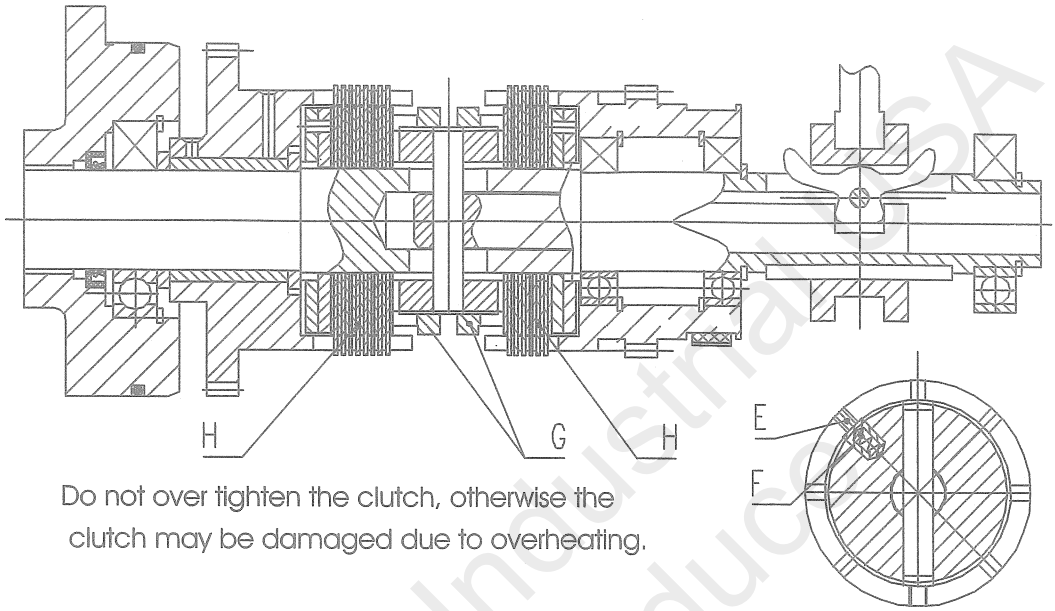

Do not over tighten the clutch, otherwise the clutch may be damaged due to overheating.

Adjustment of headstock brake

A friction brake is incorporated in the headstock, and it is in the position between forward and reverse rotations. The clutch is controlled by the 3rd shaft rod. With the machine running, if the braking time of spindle, from high speed running to stop, is over 8 seconds, the brake should be adjusted. The adjusting procedure is as follows:

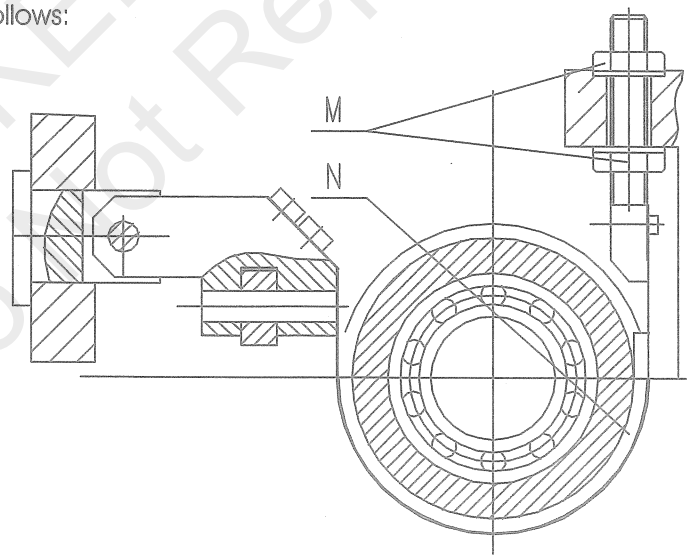

1. Switch off the mains first, then set the spindle low/high speed selector lever to neutral position and the 3rd shaft rod to the neutral position.
2. Open the headstock cover.
3. Adjust the pressure of the braking belt N by adjusting the nut M to the extent that the other shafts will not rotate while turning the pulley shaft.
4. Reset the headstock cover.

Adjustment of spindle bearing

For CDS6140A/B, CDS6240A/B, CDS6150A/B,CDS6250A/B, CDS6166A/B and CDS6266A/B, the front spindle bearing is a double row roller bearing and the rear bearing is paired radial thrust ball bearing with a damp bush as the middle bearing.

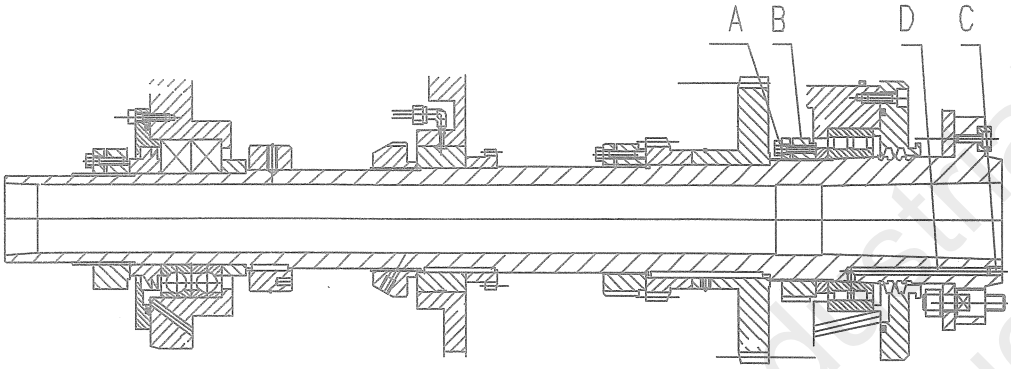

The clearance of front spindle bearing has direct influence on the accuracy of machined workpieces. The clearance has been adjusted before delivery. If it is necessary to alter it, follow the following procedures:

For decrease the clearance, loosen the screw A and tighten the nut B.

For increasing the bearing clearance, take off the screw C, loosen the screw A and the nut B. Fill pressure oil into the oil hole D with a special hand pump (optional). Make the bearing inner ring move axially along 1:12 taper surface. After adjusting, tighten the screw A and the nut B.

For CDS6140C, CDS6240C, CDS6150C,CDS6250C, CDS6166C and CDS6266C, the front and rear spindle bearings are both taper roller bearings without middle bearing.

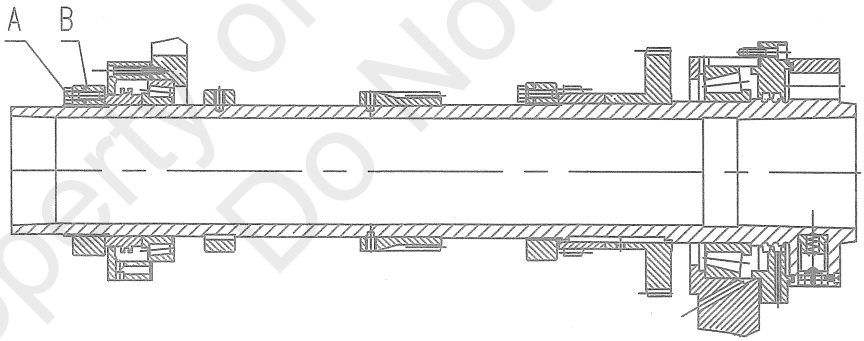

The clearances of front and rear spindle bearings have direct influence on the accuracy of machined parts. The clearances have been adjusted before delivery. If it is necessary to alter them follow the following procedure:

For decrease the clearance, loosen the screw A and tighten the nut B.

For increasing the clearance, loosen the screw A and loosen the nut B. After adjusting, tighten the screw A.

Since the clearance adjustment has great effect on accuracy and cutting performance of spindle, only the experienced serviceman is authorized to do this.

Spindle nose

C-6 type spindle nose is according to standard ISO 702/II:1975. D-8 type spindle nose is according to standard ISO 702/III:1975.

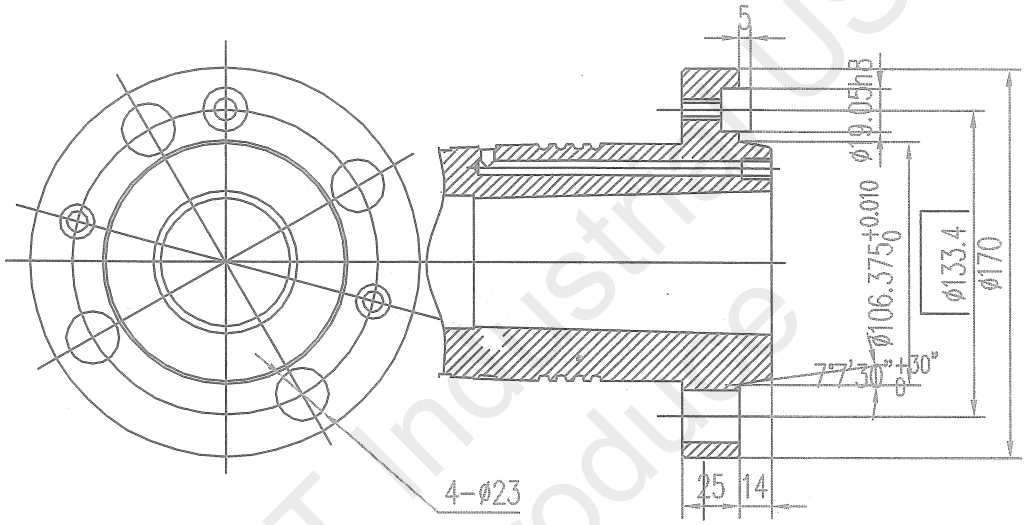

C-6 type spindle nose

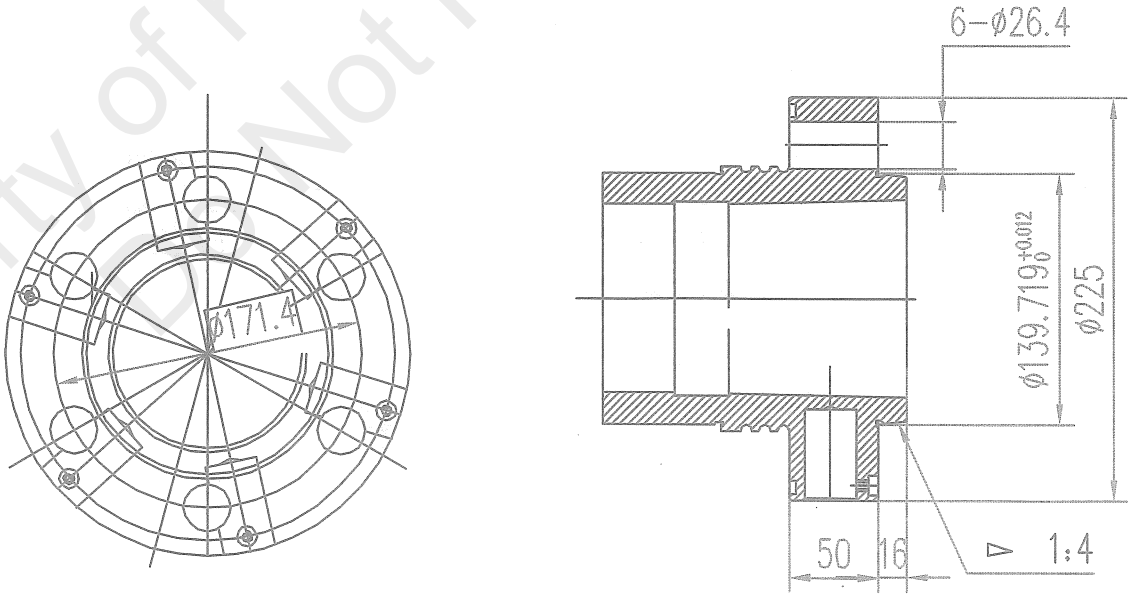

D-8 type spindle nose

Guideway gib

Tapered gibs are fitted to the cross slide and top slide to eliminate the effects of wear. To adjust the gibs, slacken the rear screws D and then tighten the front screw, making only slight alteration at a time. Finally re-tighten the rear screws. Before adjusting, clean and lubricate the gibs to ensure a smooth action.

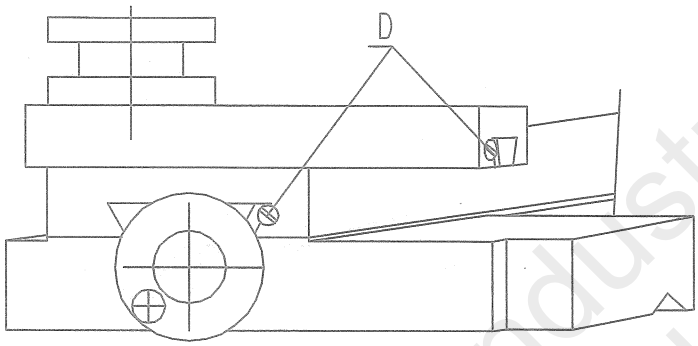

Adjustment of cross ball nut

Friction between the leadscrew and the nut may cause wear of the nut, which may result in too large lost motion of the cross graduation ring. In this case the clearance between the cross leadscrew and the nut should be altered.. To do this slacken the dog point screw 1 and properly tighten the screw 2 to make the clearance desirable. Then tighten the screw 1.

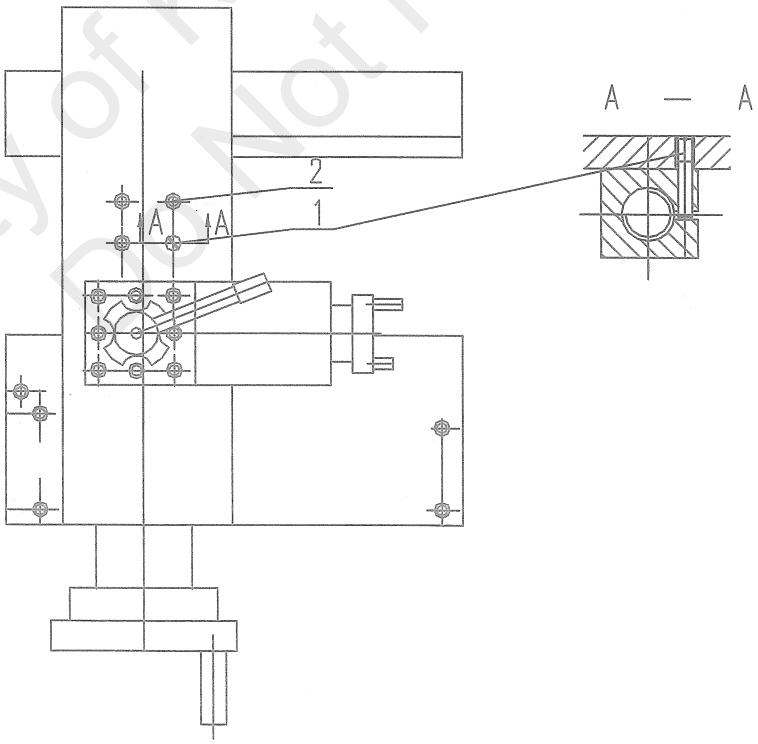

Change wheel

Normally the machine can make turning and various thread cutting without changing the change wheels. The cha y to be changed when cutting special threads.

The change wheels should be changed in the following circumstances:
Cutting imperial threads of 11 1/2 t.p.i.;13 t.p.i. ; 19 t.p.i. ;
Cutting metric threads of which pitches are more than 80mm or cutting metric threads of special pitches;
In the case of the machine CDS6140C, CDS6240C, CDS6150C, CDS6250C, CDS6166C and CDS6266C, if multiplying pitch function is adopted;

The change wheels, when the feed function is being used are the same as those with the normal pitches being used.

Lubrication

Headstock

Spindle bearings, headstock gearing and shafts are lubricated continuously from a distributor box located beneath the headstock top cover. This is supplied by an independently driven gear pump, and is not related to spindle speed. Evidence of supply is shown in an oil sight glass located on the headstock front face.

Gearbox

The oil returned from headstock will lubricate the gears and bearings inside the gearbox, then through oil return pipe flow into oil tank.

Oil tank

The oil tank is located in the front plinth of machine, and its capacity is 12 .5 litres. The oil tank should be topped up with bearing oil L-FC15 (or Mobil Velocite 10/ESSO Spinesso 15).

Apron

The apron gears and bearing lubrication are splash lubricated from an integral oil bath. The oil sight glass is located in the front of the apron and the discharge hole is located in the bottom of apron. The lubricant is: L-HM68 or L-HM46, MOBIL DTE 26.

Changewheel cover

The gears of changewheel beacket are lubricated by the oil distributor of the headstock.

Lubricating chart

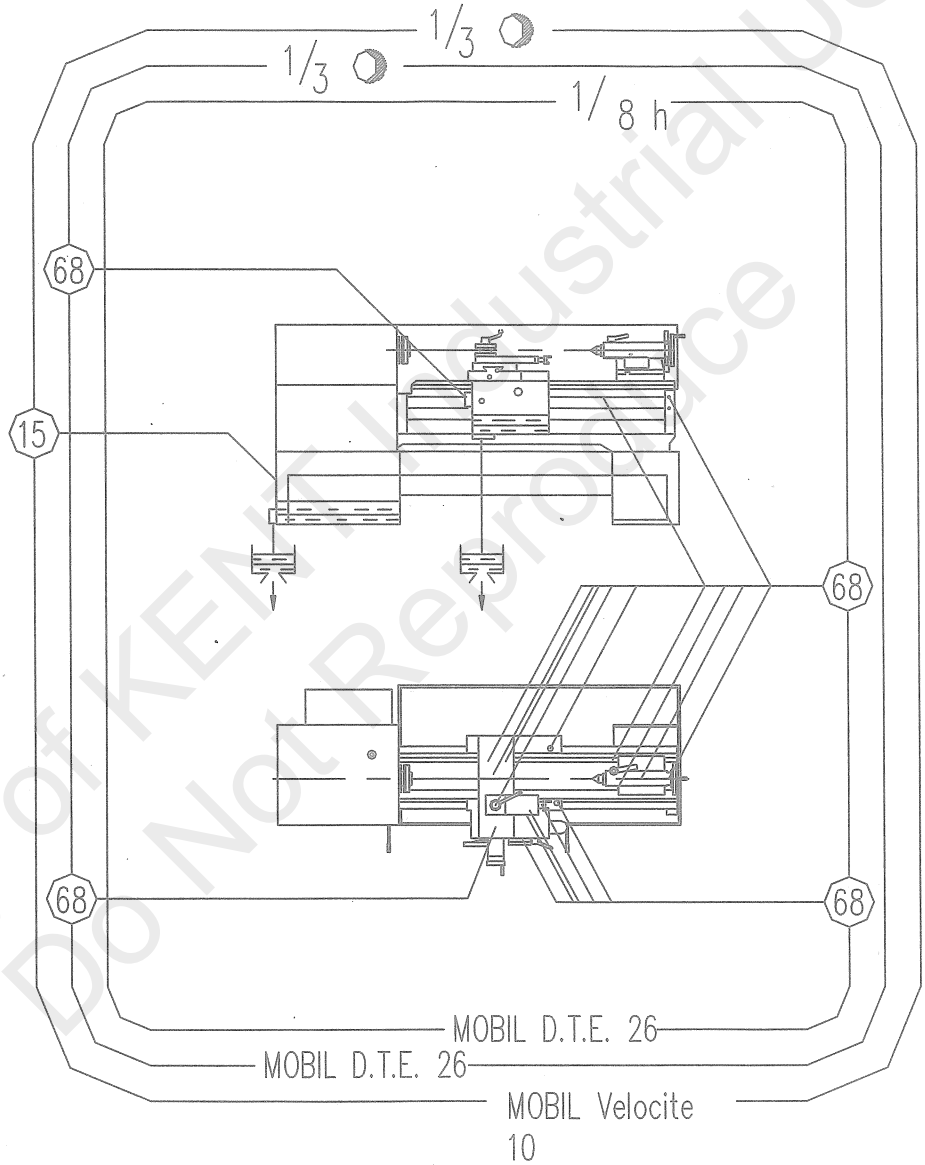

Fill the oil tank with about 12.5 liters of L-FC15 bearing oil (or MOBIL Velocite 10) once every 3 months.
Fill the apron and cross slide with about 1.5 liters of L-HM68 hydraulic oil (or MOBIL D.T.E. 26) once every 3 months.
Oil the guideways, leadscrew and tailstock and carriage with L-HM68 hydraulic oil (or MOBIL D.T.E. 26) once each shift.

Machine accessories

Many accessories are available for end-user to select and adopt (the packing list prevails).

Machine accessories

1.	3-jaw chuck	ø250 / ø315;K11	1 set
2.	Center	DM115;JB2887	2 pcs
3.	Center sleeve		1 pc
4.	Wrench	17;S92-3A	1 pc
5.	Spanner	16X17;GB4388	1 pc
	Spanner	18X19;GB4388	1 pc
	Spanner	22X24;GB4388	1 pc
	Spanner	27X30;GB4388	1 pc
6.	Allen key	5;GB5356	1 pc
	Allen key	6;GB5356	1 pc
	Allen key	8;GB5356	1 pc
	Allen key	10;GB5356	1 pc
	Allen key	12;GB5356	1 pc
7.	Pointed nose oil gun	80~100ml	1 pc

Optional accessories

1.	4-jaw chuck	ø315/ø400	1 set
2.	Face plate		1 pc
3.	Driver plate		1 set
4.	Stationary steady	ø30~ø160	1 set
5.	Travelling steady	ø20~ø80	1 set
6.	Taper turning attachment		1 set
7.	Thread dial indicator		1 set
8.	Hand pump		1 set
9.	Rotating centre		1 set
10.	Special changewheel		1 set
11.	Chuck guarding		1 set
12.	Tool post guarding		1 set

Common faults and their removal

No.	Common faults	Cause	Removal
1	Spindle bearing is over thermal growth. Max. temperature is over 70℃, or thermal growth is over 40℃.	1. Wrong trade mark of lube; 2. The lube amount is not proper (too much or too less); 3. Clearance of spindle bearing is too small.	1. Adopting correct mark of lube; 2. Add proper amount of lube to spindle bearing; 3. Reset the spindle bearing clearance.
2	Spindle vibrates while cutting.	Clearance of front spindle bearing is too much.	Readjust front spindle bearing to reduce the clearance.
3	Clutch in headstock generates thermal and its temperature is too high (for lathe with clutch in headstock).	1. Poor lubricating, no oil supplied; 2. Clearance of clutch is too small; 3. Clearance at pin shaft of pull rod controlling clutch is too large and affect real control travel of friction disk.	1. Check oil pipes for oil supply in headstock; 2. Alter clearance of clutch in headstock; 3. Check pin shafts of pull rod of clutch. If they are worn or seriously deformed, replace them.
4	No oil in oil sight glass of headstock after starting spindle motor.	1. With idle absorption occurring in lub. oil pump because of pipe leakage; 2. Filtering net is blocked by fabric etc. and oil can not be absorbed; 3. Leakage caused by too large clearance between oil pump rotor end face or shaft and sleeve due to wear; 4. Too low oil level in oil tank.	1. Check tightening condition of oil pump and pipe joints; try to use grease to do seal-check; if leakage occurs, seal it tightly; 2. Dismount oil tank, then clean or replace the oil net; 3. Repair or replace oil pump; 4. Supply enough lub. oil into oil tank.
5	When machine is running, carriage does not make feed or only moves in one direction after cross handle on right end of apron is engaged.	The L/R lever located in front of the headstock is in neutral position.	With spindle rotating forward, L/R hand lever should be at right position; with spindle reverse, the lever should be at left; it has no limit in thread cutting, but it is related to workpiece thread direction.
6	Lock position of top slide is not fixed or top slide can not be locked firmly.	1. Lock nut of top slide is loose; 2. With retardancy in rotating part of top slide.	1. Tighten lock nut; 2. Add lub. oil onto rotating shaft of top slide.

Perishable parts list

No.	Part name	Q'ty	Drawing No. or specification	Mounting location	Ser. No. in illustrated book	Remarks
1	Inner friction disk	17	CDS6140A-20751	Headstock	No. 76 at page 59	
2	Outer friction disk	13	CDS6140A-20750	Headstock	No. 75 at page 59	
3	Brake belt	1	CDS6140A-20507	Headstock	No. 107 at page 60	
4	Steel strip	1	CDS6140A-20765	Headstock	No. 108 at page 60	
5	Bush	1	CDS6140A-20303	Headstock	No. 54 at page 58	
6	Bush	1	CDS6140A-20301	Headstock	No. 58 at page 58	
7	Bush	1	CDS6140A-20305	Headstock	No. 79 at page 59	
8	Split nut	1	CDS6140A-26305A	Apron	No. 94 at page 74	Metric
9	Split nut	1	CDS6140A-26306A	Apron	No. 94 at page 74	Imperial
10	Worm gear	1	CDS6140A-26302A	Apron	No. 47 at page 71	
11	Bush	1	CDS6140A-26110	Apron	No. 40 at page 71	
12	Bearing	1	25X52X16.25;7205	Apron	No. 66 at page 71	
13	Motor	1	YSS2-5634	Apron	No. 55 at page 71	
14	Cone gear	1	CDS6140A-26751	Apron	No. 63 at page 71	
15	Cone gear	1	CDS6140A-26301	Apron	No. 64 at page 71	
16	Bearing	1	35X52X12;8107	Apron	No. 65 at page 71	
17	Bush	1	CDS6140A-26109A	Apron	No. 44 at page 71	
18	Bush	1	CDS6140A-26107	Apron	No. 16 at page 71	
19	Rapid button	1	LA9	Apron	No. 112 at page 72	
20	Spline shaft bush	1	CDS6140A-28301	Change wheel	No. 9 at page 74	
21	V-belt	4	B type V-belt	Motor unit	at page 64	

All the perishable parts listed here should be provided by the end-user himself.

Electromagnetic clutch and spring brake machine

CDS series machine can also provide headstock with the structure of electromagnetic clutch and spring brake (special order). And the machine is designed according to European CE standard, which make the machine is more safe and reliable.

On the machine with this kind of headstock, utilizing starting to control spindle forward, reverse and stop.
After starting the main motor, the starting unit is in the neutral position, break the electromagnetic clutch for spindle forward/reverse by pressing the switch in the case at the back of the bed by means of connecting rod and cam. At the same time, make the electromagnetic clutch at the end of C-axis breaking, so brake the spindle, while the main motor can run normally.

After put up or depress starting unit, energize the electromagnetic clutch for spindle forward/reverse by pressing the switch through connecting rod and cam. At the same time, energize the electromagnetic clutch at the end C-axis, and make the spindle run forward or reverse.

When pressing ESP button,(spindle forward/reverse electromagnetic clutch and electromagnetic spring brake deenergizing)the spindle is stop and main motor will stop after power off;After pressing ESP button, the rapid motor and coolant motor all will stop running with power off.
If the main motor needs to be started, put the starting unit to neutral position, and release ESP button, then restart the main motor after depressing Start Button.
The machine have Brake Release Button.
If the main machine needs to change the spindle speed, firstly put the starting unit to neutral position, and release ESP button, then push in the Brake Release Button, and use the speeds haddle to change the spindle speed.